CITY OF COLUMBIA

UTILITIES AND ENGINEERING

REGULATIONS MANUAL

TABLE OF CONTENTS

PART 1: SUBMISSION OF PLANS

Section 1.1 General 1-1
Section 1.2 Engineer's Report 1-1
Section 1.3 Plans 1-3
Section 1.4 Revision to Approved Plans 1-5
Section 1.5 Specifications 1-5
Section 1.6 Record Drawings 1-5
Section 1.7 Resubmission of Plans 1-7
Section 1.8 Vicinity Map 1-8

PART 2: WATER DISTRIBUTION SYSTEM DESIGN STANDARDS

Section 2.1 General 2-1
Section 2.2 System Design Criteria 2-1
Section 2.3 System Design 2-5
Section 2.4 Separation of Water Mains and Sewers 2-5
Section 2.5 Valves, Air Relief, Meter and Blow-off Chambers 2-7
Section 2.6 Hydrants 2-7
Section 2.7 Surface Water Crossings 2-7
Section 2.8 Cross Connections 2-8
Section 2.9 Pumping Facilities Planning Standards 2-9

PART 3: DESIGN OF SANITARY SEWERS

Section 3.1 General 3-1
Section 3.2 System Design Criteria 3-1
Section 3.3 Specification for Design of Pump Stations 3-6

PART 4: APPLICATION OF THE COLUMBIA DRAINAGE ORDINANCE, STORM SEWER DESIGN

Section 4.1 General 4-1
Section 4.2 Design Procedures 4-1
Section 4.3 Design Basis 4-1
Section 4.4 Forms 4-2
Section 4.5 Ordinance 4-8

PART 5: SPECIFICATION FOR ROADWAY DESIGN

Section 5.1 General 5-1
Section 5.2 Road System Design Criteria 5-1
Section 5.3 Road Designation 5-2
Section 5.4 Traffic Data 5-2
Section 5.5 Subgrade Soil Support Value 5-3
Section 5.6 Traffic Growth Rate 5-4
Section 5.7 Coefficients of Relative Strength of Pavement Component Layers 5-4
Section 5.8 Structural Number 5-4
Section 5.9 Stage Construction 5-5
Section 5.10 Pavement Thickness Design Methods 5-5
Section 5.11 Parking 5-18
Section 5.12 Drainage 5-18
Section 5.13 Geometrics 5-18
Section 5.14 Complete Streets 5-28

PART 6: PROCEDURES FOR THE SUBDIVISION OF LAND
Section 6.1 General 6-1
Section 6.2 Sketch Plan Review 6-1
Section 6.3 Preliminary Plat (Construction Drawings) 6-1
Section 6.4 Final Plat Approval 6-3
Section 6.5 Form No. 2 6-10
Section 6.6 Form No. 3 6-11
Section 6.7 Sample Procedures for Sanitary Sewer Construction Permitting Under Delegated Review Program Letter 6-12
Section 6.8 Sample Request for 208/201 Plan Conformance Certification 6-15
Section 6.9 Delegated Review Program Checklist 6-16

PART 7: WATER MAIN EXTENSION
Section 7.1 General 7-1
Section 7.2 Water Main Extension Agreement 7-1
Section 7.3 Procedures 7-1
Section 7.4 Applications for Individual Services 7-3
Section 7.5 Sample Water Main Extension Agreement 7-4

PART 8: SANITARY SEWER MAIN EXTENSION
Section 8.1 General 8-1
Section 8.2 Sanitary Sewer Main Extension Agreement 8-1
Section 8.3 Procedures 8-1
Section 8.4 Applications for Individual Services 8-3
Section 8.5 Sample Sanitary Sewer Agreement 8-4

PART 9: STANDARD TRAILER PARK AGREEMENT (DELETED) 9-1

PART 10: ENCROACHMENT PERMIT: STREET/ROAD NOT OWNED BY CITY OF COLUMBIA
Section 10.1 When to Obtain Permit 10-1
Section 10.2 Approval by City Engineer 10-1
Section 10.3 Approval by Appropriate Agency 10-1
Section 10.4 Where to Obtain Permit Forms 10-1
Section 10.5 Information Required for Permit 10-1
Section 10.6 Tree Root Protection 10-1
Section 10.7 Sample Agreement 10-3

PART 11: APPLICATION FOR CITY ENCROACHMENT PERMIT
Section 11.1 General Information 11-1
Section 11.2 Who Must Obtain Permit 11-1
Section 11.3 Boring Required on Major Streets 11-1
Section 11.4 Emergency Cutting 11-1
Section 11.5 Inspections 11-1
Section 11.6 Bond Required 11-1
Section 11.7 Construction and Relocation Costs 11-2
Section 11.8 Permit Fee 11-2
Section 11.9 Construction 11-2
Section 11.10 Tree Root Protection 11-2
Section 11.11 Ordinance 11-3

PART 12: APPLICATION FOR NEW WATER SERVICE

Section 12.1 General 12-1
Section 12.2 Agencies Assigning Street Numbers 12-1
Section 12.3 Required Verifications 12-1
Section 12.4 Procedures for Resumption of Water Service 12-1
Section 12.5 Fire Protection Systems 12-2
Section 12.6 Long Line Service 12-2
Section 12.7 Cross Connection Control/ Backflow Prevention 12-5
Section 12.8 Main Line Water Taps 12-6
Section 12.9 Special Power of Attorney Form 12-7

PART 13: APPLICATION FOR SANITARY SEWER SERVICE

Section 13.1 How to Apply 13-1
Section 13.2 Agencies Assigning Street Numbers 13-1
Section 13.3 Required Verification 13-1
Section 13.4 Service Connection Within SCDHPT Right-of-way 13-1
Section 13.5 Emergency Permit Procedures (SCDHPT) 13-2
Section 13.6 Sewer Tapping Fees 13-2
Section 13.7 Sewage Treatment Plant Expansion Fees 13-3
Section 13.8 Availability of Sanitary Sewer Service 13-3
Section 13.9 Sewage Pumping Station Surcharge 13-3

PART 14: INSTRUCTIONS TO BIDDER

Section 14.1 Receipt and Opening of Bids 14-1
Section 14.2 Preparation of Bid 14-1
Section 14.3 Addenda and Interpretations 14-2
Section 14.4 Time for Receiving Bids 14-3
Section 14.5 Withdrawal of Bids 14-3
Section 14.6 Bidders Present 14-3
Section 14.7 Telegraphic Modification 14-3
Section 14.8 Qualifications of Bidder 14-3
Section 14.9 Business License 14-3
Section 14.10 Bid Security 14-4
Section 14.11 Liquidated Damages for Failure to Enter Into Contract 14-4
Section 14.12 Time of Completion and Liquidated Damages 14-4
Section 14.13 Conditions of Work 14-5
Section 14.14 Subsurface Exploration 14-5
Section 14.15 Specifications and Schedules 14-5
Section 14.16 Time of Performance 14-6
Section 14.17 Samples 14-6
Section 14.18 Withholding for Nonresidents 14-6
Section 14.19 Security for Faithful Performance 14-7
Section 14.20 Insurance 14-7
Section 14.21 Accident Prevention 14-9
Section 14.22 Power of Attorney 14-9
Section 14.23 Notice of Special Conditions 14-9
Section 14.24 Laws and Regulations 14-9
Section 14.25 Method of Award – Lowest Responsible Bidder 14-10
Section 14.26 Signature to Bids 14-10
Section 14.27 Bids for All or Part 14-10

Section 14.28 Construction Schedule and Periodic Estimates 14-10
Section 14.29 Payment 14-11
Section 14.30 Special Notice to Bidders on Contracts Over $1,000,000.00 14-11
Section 14.31 Indemnification 14-12
Section 14.32 Subcontracting Outreach Program 14-12
Section 14.33 Mentor-Protégé Program 14-13
Section 14.34 Proposal Bid for Unit Price Contracts 14-14
Section 14.35 Proposal Bid for Stipulated Sum Contracts 14-15
Section 14.36 Bid Bond 14-17
Section 14.37 Equal Employment Opportunity 14-19
Section 14.38 Subcontracting Outreach Program Agreement 14-21
Section 14.39 Business Information Records 14-22
Section 14.40 Subcontracting Outreach Program Documentation Form 14-23
Section 14.41 Contract Form 14-24
Section 14.42 Notice To Proceed Form 14-26
Section 14.43 Performance-Payment Bond 14-27
Section 14.44 AIA Document A201, 1997 14-29
Section 14.45 Subcontracting Outreach Program Policies and Procedures 14-41

PART 15: GENERAL SPECIFICATIONS
Section 15.1 Definitions of Terms 15-1
Section 15.2 Laws and Regulations 15-6
Section 15.3 Contract and Contract Documents 15-6
Section 15.4 Required Provisions Deemed Inserted 15-6
Section 15.5 Notice and Service Thereof 15-7
Section 15.6 Prohibited Interests 15-7
Section 15.7 Encroachment Permits, Rights of Way, Easements and Suspension of Work 15-7
Section 15.8 Photographs 15-8
Section 15.9 Video Taping of Project 15-8
Section 15.10 Indemnity 15-9
Section 15.11 Contract Security 15-9
Section 15.12 Assignments 15-9
Section 15.13 Subcontracting 15-9
Section 15.14 Mutual Responsibility of Contractors 15-10
Section 15.15 Separate Contracts 15-10
Section 15.16 Contractor’s Obligation 15-10
Section 15.17 Payments by Contractor 15-11
Section 15.18 Contractor’s Local/Field Office 15-11
Section 15.19 Supervision 15-12
Section 15.20 Organization, Superintendence, Construction Progress 15-12
Section 15.21 Inspection by Agencies 15-13
Section 15.22 Additional Instructions and Detail Drawings 15-13
Section 15.23 Correlation of Plans and Specifications 15-14
Section 15.24 Ownership of Drawings 15-14
Section 15.25 Submittals Prior to Construction 15-14
Section 15.26 Benchmark 15-17
Section 15.27 Materials, Services and Facilities 15-17
Section 15.28 "Or Equal" (Substitute Materials) 15-18
Section 15.29 Standard Products and Materials Not Specified 15-19

Section 15.30 Product Data 15-20
Section 15.31 Samples 15-20
Section 15.32 Patents 15-20
Section 15.33 Delivery, Storage, and Handling 15-21
Section 15.34 Contractor's Title to Materials 15-21
Section 15.35 Inspection and Testing Materials, Quality and Guarantees 15-21
Section 15.36 Material Testing 15-23
Section 15.37 Experience of Manufacturer 15-26
Section 15.38 Completed Portions of Work 15-26
Section 15.39 Changes in Work 15-26
Section 15.40 Claims for Extra Work 15-27
Section 15.41 Estimated Quantities of Work 15-27
Section 15.42 Time for Completion; Liquidated Damages and No Damages for Delays 15-27
Section 15.43 Construction Schedule and Periodic Estimates 15-28
Section 15.44 Procedures for Submitting Pay Requests 15-29
Section 15.45 Acceptance of Work, Final Payment and Closeout Procedures 15-32
Section 15.46 Record Drawing 15-34
Section 15.47 Acceptance of Final Payment as Release 15-34
Section 15.48 General Warranty for Three Years After Completion of Contract 15-35
Section 15.49 Right of City to Terminate Contract 15-35
Section 15.50 Termination for Convenience and Suspension of Work 15-35
Section 15.51 Reporting on Job Retention and Creation 15-36
Section 15.52 Wages and Overtime Computation 15-37
Section 15.53 Protection of Material, Work and Property, and Injuries to Persons and Property 15-38
Section 15.54 Safety Regulations 15-39
Section 15.55 Protection of Employees' Lives and Health 15-39
Section 15.56 Weather Conditions and Emergency 15-40
Section 15.57 Mobilization 15-40
Section 15.58 Surveys, Lines, Grades, Stakes and Templates 15-41
Section 15.59 Clean Up and Restoration 15-41
Section 15.60 Use of Explosives 15-42
Section 15.61 Sediment and Erosion Control 15-42
Section 15.62 Construction Near or Under Drainage Pipes, Sewers, & Ditches 15-43
Section 15.63 Unclassified Excavation/ Geotechnical Investigation 15-43
Section 15.64 Excavation and Trench Stabilization 15-44
Section 15.65 Dewatering 15-45
Section 15.66 Backfilling 15-45
Section 15.67 Flowable Fill 15-46
Section 15.68 Maintenance of Traffic 15-47
Section 15.69 Access Roads 15-48
Section 15.70 Ingress and Egress to Public or Private Premises 15-49
Section 15.71 Rights-of-Ways and Easement Clearing 15-49
Section 15.72 Existing Utilities and Structures 15-51
Section 15.73 Interruption of Service 15-52
Section 15.74 Conflicts with and Relocation of Existing Utilities 15-52
Section 15.75 Ordinance Relating to Utility Lines in Streets 15-52
Section 15.76 Replacing Shoulder Material 15-56
Section 15.77 Asphalt Paving, Repairing and/or Resurfacing Roadways 15-56

Section 15.78 Removing, Milling and Disposing of Asphalt Pavement 15-57
Section 15.79 Remove and Replace Concrete and Asphalt Drives 15-57
Section 15.80 Concrete Curb and Gutter and Concrete Sidewalks 15-58
Section 15.81 Pavement Markings 15-58
Section 15.82 Protection of Tree Root Zones Within Street Right-Of-Way 15-59
Section 15.83 Re-establishment of Property Irons 15-64

PART 16: SPECIFICATIONS FOR WATER DISTRIBUTION SYSTEM, MATERIALS AND CONSTRUCTION
Section 16.1 General 16-1
Section 16.2 Construction Materials 16-3
Section 16.3 Construction Methods 16-9
Section 16.4 Testing and Disinfection 16-14
Section 16.5 Measurement and Payment 16-15
Section 16.6 General Warranty for Three Years After Completion of Project 16-19

PART 17: SPECIFICATIONS FOR SANITARY SEWERS
Section 17.1 General 17-1
Section 17.2 Construction Materials 17-3
Section 17.3 Construction Methods 17-10
Section 17.4 Testing for Acceptance of Sanitary Sewers 17-24
Section 17.5 Measurement and Payment 17-24

PART 18: SPECIFICATION FOR ROADWAY IMPROVEMENTS MATERIALS AND CONSTRUCTION
Section 18.1 General 18-1
Section 18.2 Construction Materials 18-1
Section 18.3 Construction Methods 18-2
Section 18.4 Testing Methods 18-2
Section 18.5 Measurement and Payment 18-2

PART 19: SPECIFICATIONS FOR FENCING MATERIALS
Section 19.1 General 19-1
Section 19.2 Construction Materials 19-1

PART 20: SPECIFICATIONS FOR SODDING, FERTILIZING AND SEEDING
Section 20.1 General 20-1
Section 20.2 Construction Materials 20-1
Section 20.3 Construction Methods 20-2
Section 20.4 Testing (Omitted) 20-3
Section 20.5 Measurement and Payment 20-3

PART 21: SANITARY SEWER SERVICE AGREEMENT (DELETED) 21-1

PART 22: FLOOD DAMAGE PREVENTION ORDINANCE
Ordinance 22-1

PART 23: MINORITY BUSINESS ENTERPRISE PROGRAM
Policy 23-1
Resolution 23-2

PART 24: PRESSURE REDUCING VALVE HOUSING
Section 24.1 General 24-1
Section 24.2 Building Excavation and Fill 24-1
Section 24.3 Floor 24-1
Section 24.4 Masonry work 24-2
Section 24.5 Portland Cement Concrete 24-3
Section 24.6 Reinforcing Steel 24-3
Section 24.7 Horizontal Joint Reinforcement 24-3
Section 24.8 Anchors and Ties 24-4
Section 24.9 Fastenings 24-4
Section 24.10 Mortar and Grout Mixing 24-4
Section 24.11 Erection Conditions 24-4
Section 24.12 Metal Doors and Frames 24-5
Section 24.13 Finish Hardware 24-6
Section 24.14 Miscellaneous Metal Work 24-6
Section 24.15 Painting 24-7

PART 25: SPECIFICATIONS FOR ALTITUDE VALVE VAULT
Section 25.1 General 25-1
Section 25.2 Materials 25-1
Section 25.3 Concrete Masonry Work 25-3
Section 25.4 Altitude Valve Vault Covers 25-4

PART 26: PROCEDURES FOR EASEMENT ACQUISITION
Procedures 26-1

PART 27: PROCEDURES FOR ACCEPTANCE OF EXISTING STREETS
Section 27.1 Purpose 27-1
Section 27.2 Scope 27-1
Section 27.3 Design and Construction Standards 27-1
Section 27.4 Procedures 27-1

PART 28: COC DIGITAL DATA SUBMISSION STANDARDS
Section 28.1 Standards 28-1
Section 28.2 Appendix A 28-4
Section 28.3 Appendix B 28-6

PART 29: FATS, OILS, AND GREASE MANAGEMENT REGULATION
Section 29.1 Purpose 29-1
Section 29.2 Definitions 29-1
Section 29.3 Grease Traps and Grease Interceptors 29-2
Section 29.4 FOG Registration and New Grease Trap/ Grease Interceptor Inspection Procedure 29-7
Section 29.5 Inspection Procedure 29-9
Section 29.6 Violations 29-10

PART 30: SPECIFICATIONS FOR GREASE TRAPS AND GREASE INTERCEPTORS
Section 30.1 General 30-1
Section 30.2 Definitions 30-1
Section 30.3 Design and Construction Requirements 30-2

Section 30.4 Inspection for Acceptance 30-5
Section 30.5 Attachment A: Standard Grease Interceptor 30-6
Section 30.6 Attachment B: Standard Grease Interceptor in Series 30-7
Section 30.7 Attachment C: Grease Trap and Grease Interceptor Sizing Guide 30-8
Section 30.8 Attachment D: Grease Trap Specification Sheet Example 30-9

PART 31 SPECIFICATIONS FOR COMMERCIAL SWIMMING POOL BACKWASH & DRAINAGE
Section 31.1 General 31-1
Section 31.2 Definitions 31-1
Section 31.3 Design and Construction Requirements 31-1
Section 31.4 Plan Review for Acceptance 31-2
Section 31.5 Attachment A: Commercial Swimming Pool Discharge Application Form 31-3

PART 1: SPECIFICATION FOR SUBMISSIONS OF PLANS
TABLE OF CONTENTS

Paragraph	Description	Page No.
1.1	General	1-1
1.2	Engineer's Report	1-1
1.3	Plans	1-3
1.4	Revision to Approved Plans	1-5
1.5	Specifications	1-5
1.6	Record Drawings	1-5
1.7	Resubmission of Plans	1-7
1.8	Vicinity Map	1-8

CITY OF COLUMBIA REGULATIONS
PART 1
SUBMISSIONS OF PLANS

1.1 GENERAL – All reports, final plans and specifications should be submitted at least two weeks prior to the date on which action by the City Engineer is desired. Preliminary plans and the engineer's report may be submitted for review prior to the preparation of final plans. No approval for construction can be issued until final, complete, detailed plans and specifications have been submitted to the reviewing authority and found to be satisfactory. All plans for projects located within the City limits of the City of Columbia must be submitted through the Planning Commission in accordance with City Subdivision Regulations. Documents submitted for formal approval shall include, but not be limited to:

1.1.1 Summary of the basis of design, where applicable.

1.1.2 Operation requirements, where applicable.

1.1.3 General layout.

1.1.4 Detailed plans.

1.1.5 Specifications.

1.2 ENGINEER'S REPORT – The engineer's report for improvements should, where pertinent, present the following information:

1.2.1 General information, including:

1.2.1.1 Description of existing facilities (water works, sewerage facilities, etc.).

1.2.1.2 Identification of the area served.

1.2.1.3 Name and mailing address of the owner or developer.

1.2.2 Extent of proposed system, including:

1.2.2.1 Description of the nature and extent of the area to be served.

1.2.2.2 Provisions for extending the proposed system to include additional areas.

1.2.2.3 Appraisal of the future requirements for service, including existing and potential industrial, commercial, institutional and other needs.

1.2.3 Alternate plans – Where two or more solutions exist for providing service, each of which is feasible and practicable, discuss the alternate plans and give reasons for selecting the one recommended, including financial considerations.

1.2.4 Soil, ground water conditions, and foundation problems, including:

1.2.4.1 Description of the character of the soil through which water mains are to be laid.

1.2.4.2 Description of foundation conditions prevailing at sites of proposed structures.

1.2.4.3 Description of the approximate elevation of ground water in relation to subsurface structures.

1.2.5 Water consumption and sewage generated, including:

1.2.5.1 Description of the population trends as indicated by the estimated population which will be served by the proposed system.

1.2.5.2 The estimated number of new lots to be served each year until the subdivision is "built out".

1.2.6 Fire flow requirements, including:

1.2.6.1 Requirements of the American Insurance Association and related agencies as to fire flows required or recommended in the service area involved (where applicable).

1.2.6.2 Fire flow which will be made available by the proposed or enlarged system. (See design criteria, Part 2.1.)

1.2.7 Sewerage system available – Describe the existing system and sewage treatment works, with special reference to their relationship to existing or proposed water works structures which may affect the operation of the water supply system, or which may affect the quality of the supply.

1.2.8 Automatic equipment – Provide supporting data justify automatic equipment, including servicing requirements, pump curves and operation manuals.

1.2.9 Project site, including:

1.2.9.1 Discussion of various sites (pumping stations, etc.) considered and advantages of the recommended ones.

1.2.9.2 Proximity of residences, industries, and other establishments.

1.2.9.3 Presence of any potential sources of pollution that may influence the quality of the supply or interfere with the effective operation of the water works system, such as sewage absorption systems, septic tanks, privies, cesspools, sink holes, refuse and garbage dumps, etc.

1.2.10 Financing, including:

1.2.10.1 Estimated cost of integral parts of the system.

1.2.10.2 Detailed estimated annual cost of operation.

1.2.11 Future extensions – Summarize planning for future needs and service, including:

1.2.11.1 Easements for future expansion of the water and sewer systems to serve adjacent property. These must be reserved at 600' intervals along the boundary of the

property to allow future connection to the system being constructed within the subdivision. Reasonable deviations from the 600' rule to allow alignment with future streets, property lines, etc., will be considered.

1.2.11.2 Easements for water, sewer and storm drain facilities shall be provided on private property. In new subdivisions, easements may be within street rights-of-way provided the easement predates the filing or recording date of the subdivision plat. Other exceptions are made for temporary lines and deep sanitary sewer lines where there is little probability of future grade conflict with highway construction. These must be justified in detail.

1.2.11.3 Easements for water main, sanitary sewer, and storm drain extensions to serve a new area must be provided by the developer unless specifically addressed in the extension agreement between the City and developer.

1.3 PLANS – Plans for improvements should, where pertinent, provide the following:

1.3.1 General layout, including:

1.3.1.1 Suitable title.

1.3.1.2 Name of municipality.

1.3.1.3 Vicinity map drawn to 1" = 1,000' scale of the area or institution to be served (See example, Part 1.7). This applies only to water construction plans.

1.3.1.4 Scale, in feet.

1.3.1.5 North point.

1.3.1.6 USGS datum.

1.3.1.7 Boundaries of the municipality or area to be served, including boundaries of any proposed phasing.

1.3.1.8 Date, address and name of the designing engineer.

1.3.1.9 Imprint of seal and signature of professional engineer.

1.3.2 Detailed plans, including but not limited to:

1.3.2.1 Topographical map of the property, sometimes referred to as a site development plan, showing lot layout, lot and block numbers, street width and names, etc., is to be used as a base map. Upon this map is to be superimposed the system being designed, i.e., water, sanitary sewer or storm drain.

1.3.2.2 Construction plan and profile sheets must be drawn to a scale of not less than 1"=100'. They must carry the seal and signature of a professional engineer registered in the State of South Carolina on each sheet. The plan sheet size shall be 24"x36". These plans are not to be confused with the requirements in Paragraph 1.2.2.1.

1.3.2.3 The plans must show the proposed name of the subdivision, owner and/or sub divider, graphic scale, north point and date.

1.3.2.4 The plan shall show the acreage to be subdivided, and the boundaries of the tract with all bearings and distances indicated. The boundary survey shall be to such a degree of accuracy that the error of closure shall comply with the standards set forth by the South Carolina Board of Engineering Examiners.

1.3.2.5 Existing conditions to be shown shall include:

1.3.2.5.1 Topography by contours at vertical intervals of not more than five (5) feet. Mean Sea Level Datum is Required and this must be so stated on the plans. In those instances where mean sea level bench datum is not reasonably close, the City will set a bench at or near your proposed work.

1.3.2.5.2 Deleted.

1.3.2.5.3 In case of resubdivision, a copy of the existing plat with proposed resubdivision superimposed thereon.

1.3.2.5.4 Location of streams, lakes, swamps and land subject to flooding based on 100 year frequency flood. (See City of Columbia Sediment and Erosion Control and Drainage Ordinance.)

1.3.2.5.5 Location of existing property lines on adjoining property and buildings on the property to be subdivided.

1.3.2.5.6 Location and ownership and rights-of-way of streets, roads, railroads and utility lines either on or adjacent to the property to be subdivided. Specify whether utility lines are in easements or street rights-of-way and show location of poles or towers.

1.3.2.5.7 Size and location of existing sewers, water mains, drains, culverts or other underground facilities within the street or within the rights-of-way of streets or roads adjoining the tract. Grades and invert elevations of existing sewers shall be shown.

1.3.2.5.8 Location of existing trees (to include type and size), streetlights (to type of pole and fixture), type of road signage and pavement markings.

1.3.2.5.9 The acreage of each drainage area affecting the proposed subdivision, both onsite and offsite.

1.3.2.5.10 All elevations shall be expressed in Mean Sea Level Datum and so indicated on the plans.

1.3.2.5.11 Location of the City limit lines and County lines, if applicable.

1.3.2.6 Proposed conditions to be shown shall include:

1.3.2.6.1 Layout of streets, road and alleys, with widths and road names, and type of gutter / drainage system.

1.3.2.6.2 Construction plans for streets showing natural and finished grades and cross-sections (if applicable).

1.3.2.6.3 Layout of all lots; scaled dimensions on lots; lot and block numbers, existing utility easements with width and use.

1.3.2.6.4 Construction plan and profile for sanitary sewers (if applicable) with grade, pipe size and material, location of manholes and points of discharge.

1.3.2.6.5 Plan and profile for storm drainage system with grade, pipe sizes, material, and location of outlets. Sediment and Erosion Control measures and storm drains shall be designed in accordance with the City of Columbia Sediment and Erosion Control and Storm Drainage Ordinance. Plans shall show sufficient off-site information and include method and computations where indicated. Transmittal letter shall include the statement by a registered engineer or architect that sediment and erosion controls and storm drain design meets the requirements of the City ordinance. For certain projects as defined in state law, the certification may be signed by a duly registered landscape architect.

1.3.2.6.6 Construction plans for water supply system with pipe sizes, material and location of hydrants and valves. The site development plan is acceptable for this purpose provided the plan is on 24”x36” sheets. Otherwise separate water construction plans will be required.

1.3.2.7 Submittal Requirements.

1.3.2.7.1 For projects inside the City limits plans must be submitted to the City Planning Commission by delivery to the Zoning Administrator’s Office, First Floor, 1136 Washington Street, and payment of applicable fees for processing and review. Submit five (5) copies of sketch plans; seven (7) copies of Preliminary Plat (construction drawings); or five copies of the final plot with one set of record drawings in mylar form, as applicable. When submitting construction plans for sanitary sewer, submit two extra sets of plans for submittal by the City to SCDHEC for permitting purposes.

1.3.2.7.2 For projects outside the City Limits, submit tow complete sets of plans for water construction and four sets of plans for sanitary sewer construction as applicable.

1.4 <u>REVISIONS TO APPROVED PLAN</u> – Any deviations from approved plans or specifications affecting capacity, hydraulic conditions, operating units, the functioning of water treatment processes, or the quality of water to be delivered, must be approved by the reviewing authority before such changes are made. Revised plans or specification should be submitted in time to permit the review and approval of such plans or specifications before any construction work, which will be affected by such changes, is begun.

1.5 <u>SPECIFCIATIONS</u> – One set of complete, detailed, technical specifications shall be supplied for the proposed project.

1.6 <u>RECORD DRAWINGS</u> – Requirements for record drawings submitted for acceptance by the City:

1.6.1 The record drawing shall conform substantially to the approved construction drawings and be submitted on disk in electronic format as required by Part 28 of this manual and in the form of a mylar, marked "record drawing" in the title block. It shall be drawn to a scale not smaller than 1"=100' and will include the following information:

1.6.1.1 Name of subdivision, and name and address of the fee simple title holder conveying the improvements and easements to the City.

1.6.1.2 Graphic scale, north point and date.

1.6.1.3 Vicinity map (record drawing) drawn to a scale of 1"=1,000' showing the relationship of the subdivision to the surrounding area. This applies only to water system drawings.

1.6.1.4 Street names and ownership and lot and block numbers.

1.6.1.5 Tax map sheet number, block number and lot number.

1.6.1.6 Topography by contours at vertical intervals of not more than five (5) feet depicting final or finished conditions after all construction is complete. Mean Sea level Datum is required and this must be so stated on the face of the plans.

1.6.1.7 Sufficient data to determine readily and reproduce on the ground the location, bearing and length of every road right-of-way line, subdivision boundary line, and block line whether curved or straight.

1.6.1.8 Newly installed roads shall be identified in plan view, profile of the centerline, and cross sections. Storm drainage systems shall be shown in plan and profile. All inverts and throats of constructed storm drainage boxes, as well as size, material and slope of storm drainage pipes shall be identified.

1.6.1.9 All dimensions to the nearest one-tenth of a foot and angles to the nearest minutes.

1.6.1.10 Location and description of monuments.

1.6.1.11 All rights-of-way, easements, and areas to be dedicated to public use with the purpose of each stated.

1.6.1.12 The following signed certificate shall appear on the final record drawing which is submitted:

1.6.1.12.1 "I hereby certify that the street, storm drainage system, sanitary sewer system and water system in _____ Subdivision as shown on the Plat dated _____ prepared by _____ has been installed in accordance with the Preliminary Plat (Construction Drawings) approved _____."

_____

Registered Engineer, State of South Carolina

1.6.1.12.2 State Plane Coordinate System data of all valves, bends, fire hydrants, individual service lines and all installed appurtenances on water system. State Plane Coordinate System data for sanitary sewer lines, manholes, wyes, and all installed appurtenances on the sewer system shall be shown, including the record drawing plan and profile. All line work shall be identified by length, size and material. All profile sheets shall show length, size, material, and slope. Coordinate System data stormdrain lines, manholes, catch basins, junction boxes, and all installed appurtenances on the storm drain system shall be shown, including the record drawing plan and profile. All line work shall be identified by length, size and material. All profile sheets shall show length, size, material, and slope. Coordinate System data for all underground electrical and irrigation systems that feed publicly owned and maintained property or utilities. All line work shall be identified by length, size and material to include both wiring and conduit. Location of all handholes, valve boxes and meters shall be identified. .Where utility lines run through easements or rights-of-way their location in relation to easement lines must be shown. Location data shall be referenced to stable physical features such as curb corners, building corners, property corners, etc. Construction line station numbers will not be as references.

1.6.1.12.3 State Plane Coordinate System data of all trees, streetlights, street signs, traffic control devices.

1.7 RESUBMISSION OF PLAN – Construction plan approval shall be valid for only two (2) years. In the event required improvements have not been constructed within that time, the plans must be resubmitted for approval subject to ordinances and regulations in affect on that date.

1.8 VICINITY MAP

1.7 VICINITY MAP

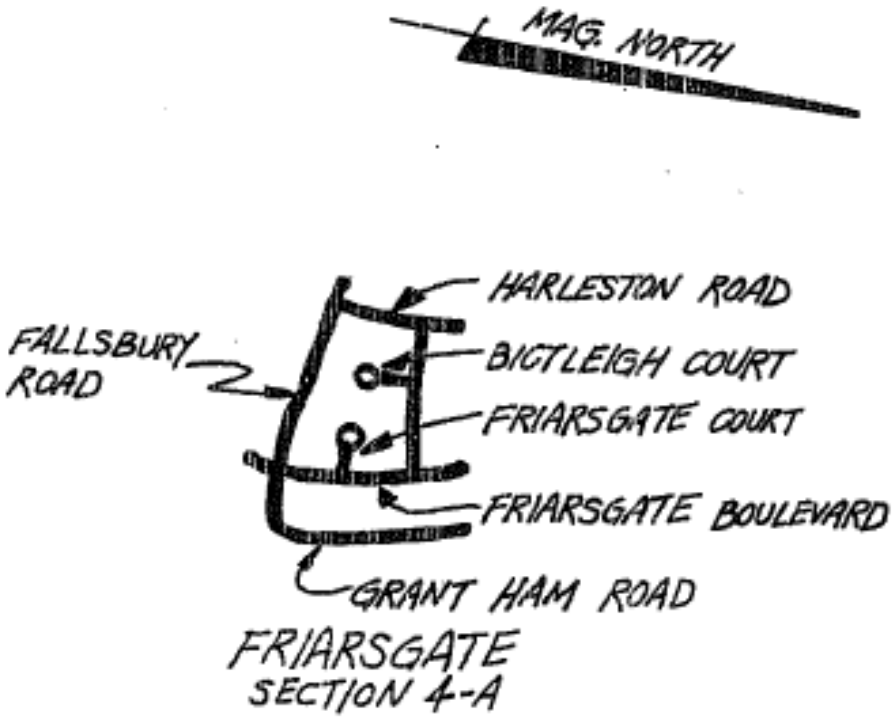

SCALE: 1"=1000'

L. R. 6/11/92

LEGEND

1	PROPERTY LINE	PL	23	STORM DRAIN	SD 15"
2	FENCE		24	SANITARY SEWER	SS 8"
3	RETAINING WALL, SIDEWALK		25	FORCE MAIN	FM 6"
4	LEVEE OR EMBANKMENT		26	WATER TANK	T
5	MARSH		27	BOOSTER PUMP	
6	TREES (DECIDUOUS)		28	JUNCTION BOX OR MANHOLE (CLOSED GRATE)	OR
7	TREES (CONIFEROUS)		29	CATCH BASIN OR MANHOLE (OPEN GRATE)	OR
8	BRUSH		30	LIFT STATION	LS
9	TREE LINE (BEGIN AND END)		31	RAILROAD	
10	DITCH, CREEK, STREAM		32	℄	℄
11	MONUMENT, TELEPHONE BOX		33	PROPOSED UTILITY	
12	PROPERTY IRON, OLD OR NEW	I.O. I.N	34	POINT OF INTERSECTION, PI	
13	GUARD RAIL		35	WATER VALVE, PROPOSED & EXISTING	
14	BRIDGE		36	FIRE HYDRANT, PROPOSED & EXISTING	
15	CULVERT AND HEADWALLS		37	CASING	
16	POWER & TELEPHONE POLE		38	AIR RELEASE VALVE	
17	GUY WIRE	C	39	SERVICE WYE	
18	CABLE TV	TV	40	PLUG	
19	GAS	G6"	41	CURB	
20	TELEPHONE	T1"	42	NORTH ARROW	N
21	ELECTRICAL, UNDERGROUND & ABOVE GROUND	UE OE	43	R/W LINE	R/W
22	WATER	W8"	44		

COLUMBIA UTILITIES AND ENGINEERING DEPARTMENT

L.R. 6/11/92

PART 2: SPECIFICATION FOR WATER DISTRIBUTION SYSTEM DESIGN STANDARDS
TABLE OF CONTENTS

Paragraph	Description	Page No.
2.1	General	2-1
2.2	System Design Criteria	2-1
2.3	System Design	2-5
2.4	Separation of Water Mains and Sewers	2-5
2.5	Valves, Air Relief, Meter and Blow-off Chambers	2-7
2.6	Hydrants	2-7
2.7	Surface Water Crossings	2-7
2.8	Cross Connections	2-8
2.9	Pumping Facilities Planning Standards	2-9

CITY OF COLUMBIA REGULATIONS
PART 2
WATER DISTRIBUTION SYSTEM DESIGN STANDARDS

2.1 GENERAL – The following water supply planning standards are based on Federal, State and local health requirements and engineering design criteria. "Ten States Standards" shall apply where applicable. All installations, whether public or privately owned, are to deliver water to the consumer which meet the bacteriological and chemical quality standards of the S.C. Department of Health and Environmental Control. If a building is to be constructed, a building permit must be issued by the governing authority. If power is required, the electrical inspector must approve the wiring prior to requesting electrical service from the utility company.

2.1.1 Water mains should not be located in contaminated areas. If a water main must run through a contaminated site, the pipe material must protect the water system from contamination. This includes water mains that are designed within 10' of a septic tank or tile field

2.1.2 Water Services and Plumbing – Water services and plumbing shall conform to relevant plumbing codes.

2.1.3 Water Pressure in System – The system shall be designed to maintain a minimum pressure of 20 pounds per square inch at all points in the distribution system under all conditions of flow.

2.1.4 Disinfection of Water Mains – (See Part 16, Section, 4.0 Testing and Sterilizing). The specifications shall include detailed procedures for the adequate flushing, disinfection, and bacteriological testing of all water mains.

2.1.5 Metering – Each service connection shall be metered in accordance with Chapter 23, Art III Sec 23-69, Code of Ordinances, City of Columbia.

2.1.6 These criteria are applicable to all developments including but not limited to residential, commercial and industrial developments, subdivisions and/or parks requiring water service from the City of Columbia.

2.2 SYSTEM DESIGN CRITERIA – Distribution mains shall be a minimum 6-inch diameter and arranged so that they are interconnected at intervals such that no loop exceeds 2,400' of 6" C=100 pipe. Hydraulic equivalent lengths of any pipe size are acceptable.

EXAMPLE: The C=100 6" diameter pipe loop is 2,400 feet in circumference (around the block). The maximum equivalent length across this loop equals 332.0 feet. No combination of pipe length and diameter in a loop shall exceed this equivalent length. Thus, the maximum length around an 8" loop will be approximately 9,600 L.F. Distance between fire hydrants will be measured along the traveled way. All water distribution systems shall be designed using C=100 to provide fire protection with minimum requirements as follows

$$EL = L_1[1+(L_1 \div L_2)^{0.54}]^{-1.85}$$

2.2.1 Valves shall be located at the intersection with other water mains. Minimum requirements will be two valves for a tee intersection and three for a cross intersection. Valve spacing shall not exceed 1,000 feet in any case.

2.2.2 Hydrants and Flows

2.2.2.1 Low density residential: (4 units or less per acre)

2.2.2.1.1 Fire hydrants shall be located at each intersection and hydrants shall be spaced no greater than 1,000 feet.

2.2.2.1.2 The minimum calculated fire hydrant flow shall be 750 gpm plus 75% of peak demand of the development, 20 psi minimum residual pressure is required at 75% of peak demand. In no case will the residual pressure on the highest building site be less than 35 psi during peak demand.

2.2.2.2 High density residential: (5 units and over per acre)

2.2.2.2.1 For areas of single family homes or duplexes, hydrants shall not be over 600 feet apart and have a calculated minimum flow of 750 gpm plus 75% peak demand of the development, 20 psi residual pressure is required at 75% of peak demand. In no case will the residual pressure on the highest building site be less than 35 psi during peak demand.

2.2.2.2.2 For areas, consisting of triplexes, apartments, dormitories, condominiums etc., hydrants shall not be over 500 feet apart and have a calculated minimum flow of 1,000 gpm plus 75% peak demand of the development, 25 psi residual pressure is required at 75% of peak demand. In no case will the residual pressure on the highest building site be less than 35 psi during peak demand.

2.2.2.3 Commercial areas:

2.2.2.3.1 For small, isolated commercial districts, the water system shall be designed the same as apartments and dormitories.

2.2.2.3.2 For large shopping centers and high-density downtown areas, the maximum hydrant spacing shall be 500 feet and have a minimum flow of 1,000 gpm with 30-psi residual pressure. In no case will the residual pressure on the highest building site be less than 35 psi during peak demand.

2.2.2.4 Industrial areas:

2.2.2.4.1 For isolated industrial sites, the maximum hydrant spacing shall be 500 feet and have a minimum flow of 1,500 gpm with 40-psi residual pressure.

2.2.2.4.2 For concentrated industrial sites, the primary water system shall be designed the same as for isolated industrial sites. Additional industrial fire requirements shall be the responsibility of the industry.

2.2.3 Minimum Design Criteria:

2.2.3.1 Flow Requirements:

2.2.3.1.1 Average demand – 135 gallons per capita per day.

2.2.3.1.2 Ratio of maximum day to average day = 2.38.

2.2.3.1.3 Ratio of maximum hourly demand to average demand = 4.2.

2.2.3.1.4 Reserve fire storage in accordance with National Board of Fire Underwriters

2.2.3.1.5 Maximum storage for "balancing" or make up water – 25% of maximum day for first construction, accepted practice thereafter.

2.2.3.1.6 Coincident demand – 1.79 times average daily demand.

2.2.3.1.7 Design residual pressure is the expected residual pressure at the connection point taking the new connection demand into account.

2.2.3.1.8 Coincident demand plus fire flow or peak demand, whichever is greater, shall be used to size subdivision piping.

2.2.3.2 Pipe:

2.2.3.2.1 Pipe three (3) inches in diameter and smaller shall be schedule 80 PVC. Pipe four (4) inches through eight (8) inches in diameter may be PVC C-900 or ductile iron pipe. Pipe twelve (12) inches in diameter or larger shall be ductile iron pipe or reinforced concrete pipe. Waterline proposed along a side property line shall be ductile iron pipe. All pipe used shall meet all specifications listed herein.

2.2.3.2.2 In no case will water main piping be less than six-inch diameter except four (4) inch diameter may be used, when properly sized, for court and cul-de-sac streets that do not require a fire hydrant or extensions to adjacent properties. Approval of 4" pipe shall be at the discretion of the City.

2.2.3.2.3 All pipe used must have working pressure rating at least two times the expected static pressure. When static pressure is 75 psi or greater, DIP shall be used.

2.2.3.2.4 The City of Columbia does not accept 1", 1.25", 2", 2.5", 3" 10", 14" and 20" pipe for use in its water distribution system.

2.2.3.2.5 Asbestos – Cement pipe is not approved for water distribution system design.

2.2.3.3 The "Equivalent Initial Flow" method may be used for determining the design residual pressure to be used at the delivery point for water to a new subdivision or service. This data will be furnished by the City Engineer's office at a charge of $175.00 per test. One week advance notice is required to provide this data.

2.2.3.3.1 Deviation and description of this method is available from the City Engineer.

2.2.3.3.2 Any other "accepted practice" method may be used; however, minimum pipe sizing will be checked by the City Engineer's office using this method and subdivision piping must meet minimum requirements indicated by this method.

2.2.4 Interim Design Standards for proposed connections to existing water distribution systems newly acquired by the City of Columbia:

2.2.4.1 Proposed connections to any newly acquired existing system must meet standards established by South Carolina Department of Health and Environmental Control and State Primary Drinking Water Regulations, with regard to fire flows, until such time as the existing system can be brought into conformance with City Standards.

2.2.4.2 Fire flow, as described in DHEC Regulations, shall be provided.

2.2.4.3 With the exception of the hydraulic analysis for fire flows, all other requirements of City Regulations and Specifications shall apply.

2.2.4.4 Once any newly acquired existing system has been brought into compliance with City standards, proposed connections must comply with normal design standards.

2.2.4.5 Cover – All distribution mains shall be provided with sufficient earth or other suitable cover. Minimum cover depth will be as follows:

2.2.4.6 Minor subdivision piping, 8 inch diameter and less, 30 inch minimum cover. *If conditions prevent a minimum of 30 inches of cover, then pipe material shall be steel, DIP, or other approved material and if exposed shall be insulated to prevent freezing. Thermal plastic pipe shall not be used above grade.*

2.2.4.7 12 inch diameter, 36-inch minimum cover.

2.2.4.8 16 inch diameter and larger, 48 inch minimum cover.

2.2.4.9 Piping 12” or larger to be located outside a dedicated easement (inside dedicated right-of-way) shall have a 48 inch minimum cover. Piping less than 12” to be located outside a dedicated easement shall have a 36” minimum cover. This depth shall be measured from the low point of the cross section of the existing road right-of-way. The road right-of-way shall include embankments, ditches and other such appurtenances adjacent to the road. The Contractor shall be required to coordinate this work with the Engineer/Inspector.

2.2.4.10 The Contractor shall be required to have all road crossings tested by an approved laboratory that will certify that the backfill material has been compacted to 95% maximum density as determined by AASHTO-00 procedures.

2.2.4.11 Special conditions other than those listed shall be approved in writing by the City Engineer.

2.2.5 Easement Requirements – Water mains shall be installed in private easements which must be dedicated to the exclusive use of the City of Columbia. These easements must be granted prior to the date the final plat for the property being developed is recorded and must be shown on the final plat.

2.2.5.1 Additionally, easements must be reserved at approximately 600 feet intervals along the boundary of the property under development to allow future

connections to the water system being proposed by the developer. The exact location of these additional easements will be determined by the City Engineer when the proposed water plans are submitted for review and approval prior to construction.

2.2.5.2 Refer to Detail Easement Acquisition at the end of Part 2 to determine width of required easements.

2.2.6 Materials – Pipe selected shall have been manufactured in conformity with City of Columbia specifications for water main construction.

2.3 SYSTEM DESIGN:

2.3.1 Dead ends shall be minimized by looping of all mains.

2.3.1.1 *Post hydrants* shall be installed on all dead end mains greater than 200 feet in length. All post hydrants must meet current City Regulations (Part 16, Standard Detail). Where dead-end mains 8" or larger occur, they should be provided with a hydrant for flushing purposes.

2.3.1.2 Permanent post hydrants shall be installed in locations that will prevent potential drainage problems. The runoff shall not be allowed to drain into existing or future yards. If possible, the post hydrant shall be located in an area which allows the flow to be directed into drainage structures (catch basins, etc.). *Post hydrants shall not be directed towards creeks but over ground where possible.* The City Engineer reserves the right to disapprove post hydrant locations based on potential drainage problems.

2.3.1.3 No flushing device shall be directly connected to any sewer.

2.3.1.4 Readily accessible means of flushing all water mains at a minimum velocity of 2.5 feet per second shall be provided.

2.3.1.5 A minimum residual pressure of 20 psi must be maintain while providing flushing flow plus maximum peak hourly flow.

2.3.1.6 Blow-offs (or other flushing devises) shall be required where changing pipe size, unless the engineer can demonstrate there is adequate pressure to flush the lines. Plans shall indicate size of blow-off.

2.4 SEPARATION OF WATER MAINS AND SEWERS:

2.4.1 General – The following factors should be considered in providing adequate separation:

2.4.1.1 Materials and type of joints for water and sewer pipes.

2.4.1.2 Soil conditions.

2.4.1.3 Service and branch connections into the water main and sewer line.

2.4.1.4 Compensating variations in the horizontal and vertical separations.

2.4.1.5 Space for repair and alterations of water and sewer pipes.

2.4.1.6 Off-setting of pipes around manholes.

2.4.2 Parallel installation:

2.4.2.1 Normal conditions – Water mains shall be laid at least 10 feet horizontally from any sanitary sewer, storm sewer or sewer manhole, whenever possible; the distance shall be measured edge-to-edge.

2.4.2.2 It is laid in a separate trench.

2.4.2.3 Unusual conditions – When local conditions prevent a horizontal separation of 10 feet, a water main may be laid closer to a storm or sanitary sewer provided that; the bottom of the water main is at least 18" above the top of the sewer.

2.4.2.4 In cases where it is not practical to maintain a ten foot separation, the City and DHEC may allow deviation on a case by case basis, if supported by data from the design engineer. Such deviation may allow installation of the water main closer to a sewer, provided that the water main is laid in a separate trench or on an undisturbed earth shelf located on one side of the sewer at such an elevation that the bottom of the water main is at least 18" above the top of the sewer.

2.4.2.5 When it is impossible to obtain the distances specified in this section, the City and DHEC may allow an alternate design. Any alternate design shall allow enough distance to make repairs to one of the lines without damaging the other.

2.4.3 Vertical Separation – Whenever sewers must cross under water mains, the sewer shall be laid at such an elevation that the top of the sewer is at least 18 inches below the bottom of the water main. When the elevation of the sewer cannot be buried to meet the above requirements, the water main shall be relocated to provide this separation or reconstructed with slip-on mechanical joint or prestressed concrete cylinder pipe for a distance of ten feet on each side of the sewer. One full length of water main should be centered over the sewer so that both joints will be as far from the sewer as possible.

2.4.3.1 Where this vertical separation cannot be obtained, the sewer shall be constructed of materials and with joints that are equivalent to water main standards of construction and shall be pressure tested to assure watertightness prior to backfilling.

2.4.4 Water mains shall not be laid less than 25' horizontally from any portion of a wasterwater tile field or spray field or it will otherwise be protected by an acceptable method approved by SCDHEC.

2.4.5 Crossings:

2.4.5.1 Normal conditions – Water mains crossing house sewers, storm sewers or sanitary sewer shall be laid to provide a separation of at least 18 inches between the bottom of the water main and the top of the sewer, whenever possible.

2.4.5.2 Unusual conditions – When local conditions prevent a vertical separation as previously described the following construction shall be used:

2.4.5.3 Water mains passing over or under sewer mains should be constructed of the materials described in 4.3 of this section.

2.4.5.4 Water mains passing under sewers shall, in addition, be protected by providing:

2.4.5.4.1 A vertical separation of at least 18 inches between the bottom of the sewer and the top of the water main.

2.4.5.4.2 Adequate structural support for the sewers or storm drain to prevent excessive deflection of joints and settling on and breaking the water mains.

2.4.5.4.3 That the length of water pipe be centered at the point of crossing so that the joints will be equidistant and as far as possible from the sewer.

2.4.5.4.4 Sewer manholes – No water pipe shall pass through or come into contact with any part of a sewer or sewer manhole.

2.4.5.4.5 Storm drain manholes – No water pipe shall pass through or come into contact with any part of a storm drain pipe or storm drain manhole/structure.

2.5 VALVE, AIR RELIEF, METER AND BLOW-OFF CHAMBERS:

2.5.1 Chambers or pits containing valves, blow-offs, meters or other such appurtenances to a distribution system, shall not be connected directly to any storm drain or sanitary sewer, nor shall blow-offs or air-relief valves be connected directly to any sanitary sewer.

2.5.2 Such chambers or pits shall be drained to the surface of the ground where they are not subject to flooding by surface water, or to absorption pits underground.

2.6 HYDRANTS:

2.6.1 Hydrant drains shall drain to the ground surface or to dry wells, provided exclusively for that purpose. (See construction specification details).

2.6.2 Hydrant drains shall not be connected to or located within ten feet of sanitary sewers or storm drains.

2.6.3 Where post-type hydrants are proposed, they must meet the requirements of blow-offs. Post hydrants shall not be used on water lines smaller than 3” in diameter.

2.7 SURFACE WATER CROSSINGS – Surface water crossings, both over and under water, present special problems which should be discussed with the reviewing authority before final plans are prepared.

2.7.1 Above-water crossings – The pipe shall be:

2.7.1.1 Adequately supported.

2.7.1.2 Protected from damage and freezing.

2.7.1.3 Accessible for repair or replacement.

2.7.2 Underwater crossings –

2.7.2.1 A minimum pipe cover of 2' will be provided for all underground stream crossings. If the crossing is greater than 15' in width a blow off must be provided on the side opposite the supply service.

2.7.2.2 The pipe shall be of special construction having flexible watertight joints. DIP shall be used with any mechanical joints being installed in lock.

2.7.2.3 Valves shall be provided at both ends of water crossings so that the section can be isolated for test or repair; the valves shall be easily accessible and not subject to flooding.

2.7.2.4 Sampling taps shall be available at each end of the crossing.

2.7.2.5 Permanent taps shall be made for testing and locating leaks.

2.8 CROSS CONNECTIONS:

2.8.1 There shall be no physical connection between the distribution system and any pipes, pumps, hydrants, or tanks whereby unsafe water or other contaminating material may be discharged or drawn into the system.

2.8.2 The approval of the reviewing authority shall be obtained for interconnections between potable water supplies.

2.8.3 Neither steam condensate nor cooling water from engine jackets or other heat exchange devices shall be returned to the potable water supply.

2.8.4 Water Loading Stations – To prevent contamination of the public water supply, the following criteria must be met:

2.8.4.1 Air Gap – A device must be installed on the fill line to provide an air break and prevent a submerged discharge line.

2.8.4.2 Hose Length – The fill line hose and cross connection control device must be constructed so that when hanging freely it will terminate at least 2 feet above the ground surface.

2.8.4.3 Fill Line Terminus – The discharge of the fill line must be unthreaded and constructed to prevent the attachment of additional hose, piping or other appurtenances.

2.8.5 No bypasses shall be allowed unless the bypass is also equipped with an equal, approved back-flow prevention device.

2.8.6 High hazard category cross connections shall require an air gap separation or an approved reduced pressure backflow preventer.

2.8.7 Reduced pressure principal backflow prevention assemblies shall not be installed in any area location subject to possible flooding. This includes pits or vaults which are not provided with a gravity drain to the ground's surface that is capable of exceeding the discharge rate of the relief valve. Generally, if installed in a pit, the drain line shall be two times the size of the line entering the backflow prevention device. The drain cannot empty into any type of ditch, storm drain, or sewer, which could flood water back into the pit.

2.8.8 All piping up to the inlet of the backflow prevention device must be suitable for potable water. The pipe must be a AWWA or NSF approved. Black steel pipe cannot be used on the inlet side of the device.

2.8.9 Fire line sprinkler systems and dedicated fire lines, except those in the high hazard category shall be protected by an approved double check valve assembly.

2.9 PUMPING FACILITIES PLANNING STANDARDS:

2.9.1 General – Pumping facilities shall be designed to maintain the sanitary quality of pumped water. Subsurface pits or pump rooms and inaccessible installations should be avoided. No pumping station shall be subject to flooding. (See Columbia Drainage Ordinance & Richland County Drainage Regulations).

2.9.2 Location – The pumping station shall be so located that the proposed site will meet the requirements of the sanitary protection of the water quality, hydraulics of the system and be protected against interruption of service by fire, flood or any other hazard.

2.9.3 Site Protection – The station shall be:

2.9.3.1 Elevated to the minimum of two feet above the 100 year return frequency flood elevation, or protected to such elevation.

2.9.3.1.1 No station shall be located in the regulatory floodway as determined by Corps of Engineers maps, etc.

2.9.3.2 Accessible at all times.

2.9.3.3 Graded around station so as to lead surface drainage away from the station.

2.9.3.4 Protected to prevent vandalism and entrance by unauthorized persons or animals.

2.9.4 Surface Water Facilities – Pump stations normally associated with the distribution system shall:

2.9.4.1 Have adequate space for the installation of additional units if needed, and for the safe servicing of all equipment;

2.9.4.2 Be of durable character, fire and weather resistant and with outward opening doors.

2.9.4.3 Have floor elevation of at least six inches above finished grade.

2.9.4.4 Have underground structure water-proofed.

2.9.4.5 Have all floors drained without impairing the quality of water being handled and if equipment is contained on the floor, the floor shall slope at least three inches in every ten feet to the pint of drainage.

2.9.4.6 Provide suitable outlet for drainage from pump glands without discharging onto the floor.

2.9.5 Suction Well – Suction wells shall:

2.9.5.1 Be watertight.

2.9.5.2 Have floors sloped to permit complete removal of water.

2.9.5.3 Be covered or otherwise protected against contamination, including pump lubricants.

2.9.6 Equipment Servicing – Pump stations shall be provided with:

2.9.6.1 Crane-ways, hoist beams, eyebolts, or other adequate facilities for servicing or removal of pumps, motors, or other heavy equipment.

2.9.6.2 Openings in floors, roofs, fences or wherever else needed for removal of heavy or bulky equipment.

2.9.7 Stairways and Ladders – Stairways or ladders shall:

2.9.7.1 Be provided between all floors, in pits or compartments which must be entered in accordance with OSHA rules and regulations.

2.9.7.2 Have handrails on both sides, and treads of nonslip materials in accordance with OSHA rules and regulations.

2.9.7.3 Stairs are preferred in areas where there is frequent traffic or where supplies are transported by hand. They shall have risers not exceeding nine inches and treads wide enough for safety.

2.9.8 Heating – Provision shall be made for adequate heating for:

2.9.8.1 The comfort of the operator.

2.9.8.2 The safe and efficient operation of the equipment.

2.9.8.3 In pump houses not occupied by personnel, only enough heat need be provided to prevent freezing of equipment or treatment process.

2.9.9 Ventilation – Ventilation shall conform to the building code. Adequate ventilation shall be provided for all pumping stations. Forced ventilation of at least six changes of air per hour shall be provided for:

2.9.9.1 All rooms, compartments, pits and other enclosures below grade floor.

2.9.9.2 Any area where unsafe atmosphere may develop or where excessive heat may be built up.

2.9.10 Dehumidification – In areas where excess moisture could cause hazards to safety or damage to equipment, means for Dehumidification shall be provided.

2.9.11 Lighting – Pump stations shall be adequately lighted throughout. All electrical work shall conform to the requirements of the City Electrical Code.

2.9.12 Sanitary and Other Connections – Except in the cases of small automatic stations or where such facilities are otherwise available, all pumping stations shall be provided with potable water, lavatory and toilet facilities. Plumbing must be so installed as to prevent contamination of the public water supply. Wastes shall be discharged in accordance with the rules, regulations and requirements of the City or County having jurisdiction over the site.

2.9.13 Pumps – At least two pumping units shall be provided. If only two units are provided, each shall be capable of carrying the peak demand. If more than two units are installed, they shall have sufficient capacity so that any one pump can be taken out of service and the remaining pumps are capable of carrying the peak demand. The pumping units shall:

2.9.13.1 Have ample capacity to supply the peak demand without dangerous overloading.

2.9.13.2 Be driven by a prime mover able to operate against the maximum head and air temperature which may be encountered.

2.9.13.3 Have spare parts and tools readily available.

2.9.14 Suction Lift – Suction left shall:

2.9.14.1 Be avoided, if possible.

2.9.14.2 Be within allowable limits, preferably less than 15 feet.

2.9.14.3 If suction lift is necessary, provision shall be made for priming the pumps.

2.9.15 Priming – Prime water must not be of lesser sanitary quality than that of the water being pumped. Means shall be provided to prevent backsiphonage in accordance with "Ten States Standards." When an air-operated ejector is used, the screened intake shall draw clean air from a point at least 10 feet above the ground or other source of contamination, unless the air is filtered by apparatus approved by the reviewing authority. Vacuum priming may be used.

2.9.16 Booster pumps – Booster pumps shall be located or controlled so that:

2.9.16.1 They will not produce negative pressure in their suction line.

2.9.16.2 The intake pressure shall be at least 20 psi when pump is in normal operation.

2.9.16.3 Automatic cutoff pressure shall be at least 20 psi in the suction line.

2.9.16.4 Automatic or remote control devices shall have a range between the start and cutoff pressure which will prevent excessive cycling.

2.9.16.5 Inline Booster Pumps – In addition to the other requirements of this section, inline booster pumps shall be accessible for servicing and repairs.

2.9.17 Automatic and Remote Controlled Stations – All automatic stations should be provided with automatic signaling apparatus which will report when the station is out of service. All remote controlled stations shall be electronically operated and controlled and shall have signaling apparatus of proven performance. Installation of electrical equipment shall conform with the National Electrical Code and the City of Columbia Electrical Code.

2.9.18 Appurtenances:

2.9.18.1 Valves – Pumps shall be adequately valved to permit satisfactory operation, maintenance and repair of the equipment. If foot valves are necessary they shall have a net valve area of at least two and one half times the area of the suction pipe and they shall be screened. Each pump shall have a positive acting check valve on the discharge side between the pump and shutoff valve.

2.9.18.2 Piping – In general piping shall:

2.9.18.2.1 Be designed so that the friction head will be low.

2.9.18.2.2 Not be subject to contamination.

2.9.18.2.3 Be sloped in one direction to drain.

2.9.18.2.4 Have adequate cleanouts.

2.9.18.2.5 Have watertight joints.

2.9.18.2.6 Be protected against surge or water hammer.

2.9.18.2.7 Be such that each pump has an individual suction line or the lines shall be so manifold that they will insure similar hydraulic and operation conditions.

2.9.19 Have a standard pressure gauge on its discharge line.

2.9.19.1 Have a compound gauge on its suction line.

2.9.19.2 Have recording gauges in the larger stations.

2.9.19.3 Have a direct reading meter in gallons with accumulator.

2.9.20 Water Seals – Water seals shall not be supplied with water of a lesser sanitary quality than that of the water being pumped. Where pumps are sealed with potable water and are pumping water of lesser sanitary quality the seal shall:

2.9.20.1 Be provided with a break tank open to atmospheric pressure.

2.9.20.2 Have an air gap between feeder line and split line of the tank, at least six inches or two pipe diameters, whichever is greater.

2.9.21 Controls – Pumps, their prime movers and accessories, shall be controlled in such a manner that they will operate at rated capacity without dangerous overload. Electrical controls should be located above grade.

2.9.22 Power – When power failure would result in cessation of minimum essential service, power supply shall be provided from at least two independent sources or standby or auxiliary source shall be provided.

2.9.22.1 Auxiliary Power Supply – When automatic pre-lubrication of pump bearings is necessary, and an auxiliary power supply is provided, the pre-lubrication line shall be provided with a valved by-pass around the automatic control.

PART 3: SPECIFICATION FOR DESIGN OF SANITARY SEWERS
TABLE OF CONTENTS

Paragraph	Description	Page No.
3.1	General	3-1
3.2	System Design Criteria	3-1
3.3	Specification for Design of Pump Stations	3-6

CITY OF COLUMBIA REGULATIONS
PART 3
DESIGN OF SANITARY SEWERS

3.1 GENERAL – The City Engineer will approve plans for new systems, extensions, or replacement sewers only when designed according to the "separate plan", in which rain water from roofs, streets, and other areas, and ground water from foundation drains are excluded. Sanitary sewers 15 inches and smaller shall be VCP or PVC with an approved joint. Sanitary sewers 18 inches and larger may be concrete with approved joints and an approved liner. Sewers shall not be constructed under street paving except for crossings. Variations must be approved, in writing, by the City Engineer.

3.1.1 Sewer systems should be designed for the estimated ultimate tributary population, except in considering parts of the system that can be readily increased in capacity. Similarly, consideration should be given to the maximum anticipated capacity of institutions, industrial parks, etc.

3.2 SYSTEM DESIGN CRITERIA – In determining the required capacities of sanitary sewers the following factors shall be considered:

3.2.1 General information, including

3.2.1.1 Maximum hourly sewage flow.

3.2.1.2 Additional maximum sewage or waste flow from industrial plants.

3.2.1.3 Ground water infiltration.

3.2.1.4 Topography of area.

3.2.1.5 Location of waste treatment plant.

3.2.1.6 Depth of excavation.

3.2.1.7 Pumping requirements.

3.2.1.8 The proposed sanitary sewers, above the point where there are 375 acres in the drainage basin or the pipe size is 15", whichever is greater, must be adequately designed to handle the effluent at the ultimate land holding capability. Downstream from this point, design based on the Central Midlands Regional Planning Council's 20 year projected population figures will be acceptable, provided easements 5 feet wide are furnished, to provide for future installation of parallel lines. Additionally, where at least 30 percent of a drainage area is already developed, a population density at least equal to that of the existing development must be used for the entire drainage area.

3.2.2 Per Capita Flow – New sewer systems shall be designed on the basis of an average daily per capita flow of sewage of not less than 100 gallons per day. This figure is assumed to cover normal infiltration, but an additional allowance should be made where conditions are unfavorable. Generally, the sewers should be

designed to carry, when running full, not less than the following daily per capita contributions of sewage, exclusive of sewage or other waste flow from industrial plants:

$$Q = (10x104P)\left(I \div \frac{14}{4 \div \sqrt{P}}\right)$$

Where "P" is the population in thousands.

3.2.3 Alternate Method – When deviations from the foregoing per capita rates are demonstrated, a description of the procedure used for sewer design shall be included. Such design will be approved at the discretion of the City Engineer.

3.2.4 Minimum size – No sewer shall be less than eight inches in diameter. Wyes for services lines shall have a minimum branch size of six inches.

3.2.5 Depth – In general, sewers shall be sufficiently deep so as to receive sewage from basements and to prevent freezing. Sanitary sewers shall have a minimum cover of three feet between manholes except that they may be encased or constructed of cast iron if this depth cannot be achieved.

3.2.6 Slope

3.2.6.1 All sewers shall be so designed and constructed to give mean velocities, when flooding full, of not less than 2.0 feet per second, based on Mannings' formula. The following are the minimum slopes which should be provided; however, slopes greater than these are desirable:

Sewer Size	Minimum Slope in Feet per 100 Feet
8"	0.40
10"	0.28
12"	0.22
14"	0.17
15"	0.15
16"	0.14
18"	0.12
21"	0.10
24"	0.08
27"	0.067
30"	0.058
36"	0.046

3.2.6.2 Under special conditions, if detailed justifiable reasons are given, slopes slightly less than those required for the 2.0 feet per second velocity when flowing full may be permitted. Such decreased slopes will only be considered where the depth of flow will be 0.3 of the diameter or greater for design average flow. Whenever such decreased slopes are selected, the design engineer must furnish with his report his computations of the depths of flow in such pipes at minimum, average, and daily or hourly rates of flow. It must be recognized that decreased slopes may cause additional sewer maintenance expense. Sewers shall be laid with uniform slope between manholes.

3.2.6.3 Sewers on 20 percent slope or greater shall be anchored securely with concrete anchors or equal, spaced as follows:

3.2.6.3.1 Not over 36 feet center to center on grades 20 percent and up to 35 percent.

3.2.6.3.2 Not over 24 feet center to center on grades 35 percent and up to 50 percent.

3.2.6.3.3 Not over 16 feet center to center on grades 50 percent and over.

3.2.7 Alignments – Sewers 24 inches or less shall be laid with straight alignment between manholes.

3.2.8 Increasing Size – When a smaller sewer joins a larger one, the invert of the larger sewer shall be lowered sufficiently to maintain the same energy gradient. An approximate method for securing these results is to place the 0.8 depth point of both sewers at the same elevation.

3.2.9 High Velocity Protection – Where velocities greater than 15 feet per second are attained, special provisions shall be made to protect against displacement by erosion and shock.

3.2.10 Materials – The material selected for construction shall be adapted to local conditions, such as character of industrial wastes, possibility of septicity, soil characteristics, exceptionally heavy external loadings, abrasion and similar problems. Cement asbestos pipe is not approved for sanitary sewer construction. Where the proposed material is not covered in Columbia specifications, installation specifications shall contain appropriate requirements based on the criteria, standards and requirements established by industry in its technical publications. Requirements shall be set forth in the specifications for the pipe and method of bedding and backfilling thereof so as not to damage the pipe nor its joints, impede cleaning operations and future tapping, nor create excessive side fill pressures nor ovulation of the pipe, nor seriously impair flow capacity. All sewers shall be designed to prevent damage from superimposed loads. Proper allowance for loads on the sewer shall be made because of the width and depth of trench. When standard strength sewer pipe is not sufficient, the additional strength needed may be obtained by using extra strength pipe or by special construction.

3.2.11 Joints and Infiltration – In general, DIP or PVC joints are required although other materials will be considered for approval. The method of making joints and materials used should be included in the specifications. Sewer joints shall be designed to minimize infiltration and to prevent the entrance of roots. Leakage tests shall be specified. This may include appropriate water or low pressure air testing. The leakage outward or inward (exfiltration or infiltration) shall not exceed 200 gallons per inch of pipe diameter per mile per day for any section of the system. The use of television camera or other visual methods for inspection prior to placing the sewer in service is required. Results of such tests shall be certified to the City Engineer in writing by a registered engineer.

3.2.12 Sanitary sewers shall be constructed of ductile iron at stream crossings.

3.2.13 Calculations – Computations should be presented, in a tabular form, to indicate depths and velocities at minimum, average and maximum daily waste flow for the different sizes of sewers proposed.

3.2.14 Manholes

3.2.14.1 Location – Manholes shall be installed at the end of each line; at all changes in grade, size, or alignment; at all intersections; and at distances not greater than 400 feet for sewers 15 inches or less, and 500 feet for sewers 18 inches to 30 inches, except that distances up to 600 feet may be approved in cases where adequate modern cleaning equipment for such spacing is provided. Greater spacing may be permitted in larger sewers and in those carrying a settled effluent. Lampholes may not be used.

3.2.14.2 Drop Type – A drop pipe should be provided for a sewer entering a manhole at an elevation of 24 inches or more above the manhole invert. Where the difference in elevation between the incoming sewer and the manhole invert is less than 24 inches, the invert should be filleted to prevent solid deposition.

3.2.14.3 Diameter – The minimum diameter of manholes shall be 48 inches; larger diameters are preferable. For sewer pipes in sizes eight inches up to 15 inches, manholes are to be a minimum of four feet in diameter. For sewer pipes 18 inches and larger, manholes are to be a minimum of five feet in diameter.

3.2.14.4 Manhole Depth – The four foot diameter manhole shall have a minimum depth of four feet and a maximum depth of less than 12 feet measured from the top of pipe to the top of the ring. Manholes of larger diameter shall be proportionately deeper. This provides for proper corbel construction.

3.2.14.5 Flow Channel – The flow channel through manholes should be made to conform in shape and slope to that of the sewers.

3.2.14.6 Watertightness – Watertight manhole covers are to be used wherever the manhole tops may be flooded by street runoff or high water and where the manhole covers are below the base flood elevation (BFE). Manholes or brick shall be waterproofed on the exterior with plaster coatings; supplemented by a bituminous waterproof coating where ground water conditions are unfavorable.

3.2.14.7 Electrical – Electrical equipment installed or used in manholes shall conform to paragraph 3.1.18.3.10.

3.2.15 Inverted Siphons – Only if approved by the City Engineer, inverted siphons should have not less than two barrels, with a minimum pipe size of six inches and shall be provided with necessary appurtenances for convenient flushing and maintenance; the manholes shall have adequate clearances for rodding; and in general, sufficient head shall be provided and pipe sizes selected to secure velocities of at least 3.0 feet per second for average flows. The inlet and outlet details shall be arranged so that either barrel may be taken out of service for cleaning.

3.2.16 Sewer Extensions – In general, sewer extensions shall be allowed only if the receiving sewage treatment plant is either;

3.2.16.1 Capable of adequately processing the added hydraulic and organic load; or,

3.2.16.2 Provision of adequate treatment facilities on a time schedule acceptable to the approving agency is assured.

3.2.17 Protection of Water Supplies

3.2.17.1 Water Supply Interconnections – There shall be no physical connection between a public or private potable water supply system and a sewer, or appurtenance thereto which would permit the passage of any sewage or polluted water into the potable supply.

3.2.17.2 Relation to Water Works Structures – While no general statement can be made to cover all conditions, it is generally recognized that sewers shall meet the requirements of the approving agency with respect of minimum distances from public water supply wells or other water supply sources and structures.

3.2.17.3 Relation to Water Mains

3.2.17.3.1 Horizontal Separation – Whenever possible, sewers should be laid at least ten feet, horizontally, from any existing or proposed water main. Should local conditions prevent a lateral separation of ten feet, a sewer may be laid closer than ten feet to a water main if:

3.2.17.3.1.1 It is laid in a separate trench.

3.2.17.3.1.2 It is laid in the same trench with the water mains located at one side on a bench of undisturbed earth.

3.2.17.3.1.3 In either case the elevation of the crown of the sewer is at least 18 inches below the invert of the water main.

3.2.17.3.2 Vertical Separation – Whenever sewers must cross under water mains, the sewer shall be laid at such an elevation that the top of the sewer is at least 18 inches below the bottom of the water main. When the elevation of the sewer cannot be buried to meet the above requirements, the water main shall be relocated to provide this separation or reconstructed with slip-on or mechanical-joint cast-iron pipe or prestressed concrete cylinder pipe for a distance of ten feet on each side of the sewer. One full length of water main should be centered over the sewer so that both joints will be as far from the sewer as possible.

3.2.17.3.3 Special Conditions – When it is impossible to obtain proper horizontal and vertical separation as stipulated above, the water main shall be constructed of slip-on or mechanical-joint cast-iron pipe or prestressed concrete cylinder pipe and the sewer constructed of mechanical-joint cast-iron pipe, and both services should be pressure tested to assure water tightness.

3.2.17.4 Relation to Storm Drain Systems

3.2.17.4.1 Horizontal Separation – Whenever possible, sewers should be laid at least five feet, horizontally, from any existing or proposed storm drain pipes or structures. Should local conditions prevent a lateral separation of five feet, a sewer main may be laid closer than five feet to a storm drain pipe main if:

3.2.17.4.1.1 It is laid in the same trench with the storm drain pipe main located at one side on a bench of undisturbed earth.

3.2.17.4.2 Vertical Separation – Whenever sewers must cross storm drains, the sewer shall be laid at such an elevation that the top of the sewer is at least 18 inches below the bottom of the water main. When the elevation of the sewer cannot be buried to meet the above requirements, the water main shall be relocated to provide this separation or reconstructed with slip-on or mechanical-joint cast-iron pipe or prestressed concrete cylinder pipe for a distance of ten feet on each side of the sewer. One full length of water main should be centered over the sewer so that both joints will be as far from the sewer as possible.

3.2.17.4.3 Special Conditions – When it is impossible to obtain proper horizontal and vertical separation as stipulated above, the water main shall be constructed of slip-on or mechanical-joint cast-iron pipe or prestressed concrete cylinder pipe and the sewer constructed of mechanical-joint cast-iron pipe, and both services should be pressure tested to assure water tightness.

3.3 SPECIFICATION FOR DESIGN OF PUMP STATIONS – The standards in this section are applicable to all pump stations that the City will own and maintain. This section is intended for pump stations with reliable design capacities of less than 1000 gpm serving domestic wastewater. For pump stations with larger reliable design capacities, or stations serving wastewater other than domestic, please contact the City for additional requirements and design standards.

All sewage pumping stations that will be turned over to the City for ownership and maintenance shall be reviewed during design before being bid for construction, and after completion of construction to ensure compliance with these standards. Failure to meet these requirements may result in denial of taking ownership of the pump station, force main, and appurtenances until the requirements are met.

The standards listed below are minimum City of Columbia design standards. The written standards in combination with the standard details and referenced documents are all included as a part of the standard. These should be adhered to, with good Engineering practice. If a variation or exception is needed to maintain good Engineering practices, please provide an explanation supporting the type of variation, and the reason for the variation for review by the City for acceptance. A submittal of a variance request does not guarantee approval.

The developer is responsible for securing and paying all application and permit fees and costs associated with and incurred for the pump station before final acceptance. The City will take ownership of the pump station upon final acceptance, at which time billing for utilities will be transferred to the City of Columbia.

3.3.1 GENERAL - In general pumping stations will only be approved where gravity service is not possible.

3.3.1.1 Pump stations shall not be subject to flooding. Pump stations should remain fully operational and accessible during the 25 year flood. Temporary facilities expected to be in service from five to ten years shall be protected from the 25 year frequency storm in accordance with the Columbia Drainage Ordinance. Pump station structures, electrical and mechanical equipment shall be protected from physical damage by flooding to the 100 year flood elevation. Permanent structures which have a life expectancy of more than ten years shall be 2 feet above the 100 year flood plain or one foot above the base flood elevation, whichever is more stringent. It is important that the station be readily accessible.

3.3.1.2 All pump stations and force mains shall meet the requirements of SCDHEC Standards for Wastewater Facility Construction R.61-67 and Ten States Standards, latest edition.

3.3.1.3 Pump Station sites, collection system, force main, access road, and any other appurtenances that are to be owned and maintained by the City are to be deeded over to the City per the City property requirements for pump stations.

3.3.1.4 All paints and coatings to be applied must meet or exceed manufacturer's recommendations for the specific application.

3.3.1.5 Provide flood elevation, and base flood elevation (where applicable) on drawings and record drawings. List surveyor information including company, date, and datum.

3.3.2 PUMP STATION SITE AND EQUIPMENT - The size of the site provided for the pumping station must be a minimum of 60 feet by 60 feet. The pumping station site must be fenced with an access gate. The fence shall be a 6 foot tall standard galvanized fence with eight gauge wire (not coated) with 3 strand barbed wire. Wooden fences or other decorative fences are not allowed as a substitution. However, a wooden or decorative fence is allowed outside of the galvanized fence for screening and aesthetic purposes, but must be located outside of the City's pump station property and be maintained by the property owner.

3.3.2.1 A double swing gate shall be provided at the pump station site access. The gate shall consist of two eight-foot gates with self-holding latches and a recessed center latch point.

3.3.2.2 The fence shall have a City standard weather durable emergency contact sign attached at a location visible from the access road.

3.3.2.3 An all weather access road a minimum of 12 feet wide shall be provided for access to the pump station site. The road shall consist of a minimum of 6-inches of crusher run stone, AND must be capable of supporting 36,000 pound vehicles. A permanent easement, a minimum of 20 feet wide, must be furnished centered along the access road.

3.3.2.4 The entire pump station site within the limits of the fencing shall be crusher run stone that meets the same minimum requirements as specified for the all weather access road unless specified otherwise.

3.3.2.5 Pump stations shall be designed to be submersible type stations.

3.3.2.6 Pump station wet wells shall be round. Wet wells shall be sized for sewershed basin build-out condition utilizing sound Engineering practice and standards and shall include design information such as Metcalf and Eddy land use flow projections, topographic maps, land use maps, zoning, population projections, the study of available land for development, and other available City or County planning studies which may include the sewershed area. Coordination with the City's hydraulic engineer may be required to collaborate on design flow for build-out conditions.

3.3.2.7 The wet well shall be positioned inside the fence so as to allow easy access with a vacuum or boom truck.

3.3.2.8 A by-pass pumping connection utilizing Bauer fittings shall be provided close to the entrance and easily accessible with a truck.

3.3.2.9 Pump station wet well and valve vaults to be sized for build-out conditions and shall be large enough to accommodate future pump sizes.

3.3.2.10 Valve vaults shall be of sufficient inside depth to house valves and appurtenances with enough clearance, but shall be shallow enough to not be defined as a confined space.

3.3.2.11 Wet well access hatch to be aluminum double door by Halliday, Bilco or approved equal with spring assist. Access hatch to be sized to provide the ability to remove pumps and future pumps sized for build-out conditions, as well as provide easy access to guide rails and float hangars. Access hatch to be a minimum 4-foot by 4-foot.

3.3.2.12 Wet well shall be provided with a ductile iron vent with a 90-degree elbow on the end with a 24 mesh stainless steel screen. The entire vent shall be coated with Light Grey 32GR Tnemec paint or approved equal.

3.3.2.13 Pumps to be submersible Flygt pumps. A minimum of two identical pumps are to be installed. In addition to the pumps installed, an additional identical spare pump shall be provided and delivered to the City Metro Wastewater Treatment Plant. Pumps are to be designed with a design capacity that will be able to handle maximum anticipated peak flows with any one pump out of service.

3.3.2.14 The design of the pumping station shall include the submission of the proposed flows to the City for review in accordance with the City's Capacity Assurance Program for approval of the downstream receiving collection system to ensure that there is adequate capacity to handle the proposed flows and pumping rates. The extent of the downstream collection system requiring evaluation, as well as the criteria for evaluation, shall be determined by the City.

3.3.2.15 Pumps to be provided with Flygt standard guide rails with spacing that will also accommodate build-out condition pumps. Guide rails may be welded for wet wells up to 23 feet deep as long as the extension rail added to the 20 foot section is no longer than 3 feet in length. A smaller internal pipe which fits within the rails should extend at least 3 inches into each rail being welded together. The finished weld should be smooth with the exterior of the welded sections so as not to interfere with the pump guide rail bracket when removing or installing the pumps. Any wet well requiring more than three feet extension rail shall use an intermediate guide rail bracket attached to the discharge pipe.

3.3.2.16 All hardware shall be stainless steel including, but not limited to, lifting chains, bolts, nuts, guide rails, anchors, bolts, nuts, washers, screws, etc.

3.3.2.17 Each pump to include a 3/8-inch PC 316 stainless steel lifting chain.

3.3.2.18 Provide two Flygt or approved equal flat bolted stainless steel plates with 4 hooks minimum on each on opposite sides of the wet well access.

3.3.2.19 Level sensors shall be provided to be read using a submersible level transducer as defined in the Remote Telemetry Unit, Instrumentation, and SCADA System Interface Specification for wet wells over 20 feet deep (with a minimum 30 foot range capability if less than 30 feet is required, or greater if needed), and either a submersible level transducer as defined above or a ultrasonic level sensor Milltronics MultiRanger 200 with Echomax XPS-15 series transducer or approved equal for wet wells 20 feet deep or less (with a minimum 30 foot range capability). All pump stations shall have a float switch backup system with floats as defined in the Remote Telemetry Unit, Instrumentation, and SCADA System Interface Specification that is in place and operates in case of level sensor failure as further defined in the SCADA specifications. Pneumatic bubbler systems are not acceptable.

3.3.2.20 Wet well interior (excluding the bottom) and all exposed piping in the wet well shall be coated with Raven 405 coating with a minimum of 120 mils.

3.3.2.21 The wet well floor shall have a minimum slope of one to one to the hopper bottom. The horizontal area of the hopper bottom shall be no greater than necessary for proper installation and function of the pump inlet.

3.3.2.22 Valve vault shall be less than 4 feet deep and a minimum 4-foot by 4-foot size for a 4-inch discharge and 4-foot by 6-foot for a 6-inch discharge.

3.3.2.23 Valve vault to have an access hatch that opens to expose the entire vault, matching the size of the vault interior. The hatch shall be a traffic rated aluminum access hatch.

3.3.2.24 A drain from the valve vault to the wet well shall be provided with a minimum 4-inch drain at a minimum 1 percent slope. A Tideflex Series 35 Flanged Check Valve or approved equal shall be used on the interior of the wet well on the end of the drain line from the valve vault. The valve shall be installed in accordance with manufacturer recommendations and positioned as to not interfere with pump removal, and be visible and readily accessible from the wet well hatch opening

(i.e.-not behind guide rails, etc). A removable screen shall be installed on the intake side of the drain to prevent debris from entering the drain.

3.3.2.25 Safety grating shall be provided in the wet well. Provide hinged aluminum grating panels in access hatch openings to provide protection against fall through accidents when the access hatch is open. Aluminum grating panels shall be constructed from aluminum "I" bar construction, be rated for a minimum load rating of 300 lbs. per sq. ft., include a positive latch to hold safety grate open when in the open position, include lockable safety grates, spring assisted lifting handle, have 316 stainless steel mounting hardware, and have an orange powder coating finish. Attach access hatch safety grate to concrete below access hatch frame. For openings greater than 53" wide, provide two panels.

3.3.2.26 All exposed piping, fittings, and valves shall be painted with 09SF Spearmint Green/Safety Tnemec paint or approved equal.

3.3.2.27 No check valves shall be installed inside of the wet well. Check valves shall be located within the valve vault between the pump and the shut-off valve.

3.3.2.28 A water supply with a minimum 4-inch service shall be installed to the site with a Mueller or approved equal post hydrant as well as a yard hydrant. The hydrants shall be frost and freeze proof, and shall be anti-siphon. All water related items shall be coordinated with the Water Division within the City of Columbia for fees, preferences, and standards.

3.3.2.29 A testable backflow preventer and meter shall be provided for the water service to the site. The meter and backflow preventer shall be located in separate meter boxes. All water related items shall be coordinated with the Water Division within the City of Columbia for fees, preferences, and standards.

3.3.2.30 Two hoses shall be provided at the site. A 25-foot industrial 2-inch hose with an adjustable brass spray nozzle and a 25-foot 3/4-inch hose with an adjustable brass spray nozzle shall be provided. A weatherproof hose rack shall be provided for each hose.

3.3.2.31 Check valves 12-inches and smaller shall be Mueller A-2606-6-01B1 flanged end with rubber disc facing swing type lever and weight.

3.3.2.32 Pressure gauges shall be 4-inch diameter quick disconnect Ashcroft or Wika that are glycerin filled and accurate within 0.5 percent of the total scale range. The gauges shall have type 316L stainless steel housing and components, and shall provide a top limit above the pump shutoff head. Provide optimal design point to be approximately at 50 percent of the total range of the gauge. Pressure gauges to be installed with a stainless steel shut-off ball valve with handle. Pressure gauge to face upward for optimal visibility from above without entry into the vault. Three pressure gauges shall be provided, 1 on the discharge end of each pump just before the check valve, and one on the force main on the discharge end after the tee where both pump discharges combine into one common force main. All three gauges shall be located within the valve vault.

3.3.2.33 Stainless steel shut-off ball valves 3-inches and smaller shall be full port with a lever handle operator, and a three piece body that is in-line serviceable without removing the valve from the line. Acceptable manufacturers include Series 60 as manufactured by Whitey or Apollo Series 86R-200 as manufactured by Conbraco, CF Ball Valve Series F12 as manufactured by CF Fluid Controls, or V3P-1000 as manufactured by Velan. Stainless steel ball valves 3 to 4 inches shall be regular port stainless steel ball valves with an oval handle operator, top entry design, fully serviceable without removing the valve body from the line, Seal body cover to body section with fully closed spiral wound graphite gasket, and adjustable two-piece packing gland and pre-compressed solid packing rings. Acceptable manufacturers include Series "TE-150/300/600" as manufactured by Velan.

3.3.2.34 Surge relief valves shall be provided if required in the valve vault. Valves shall have a cast iron body and shall be GA Industries 625-D or approved equal. Valve shall provide a full opening of the pipeline area in the open position. The requirement of a limit switch shall be determined by the City based on force main and pump conditions and should be verified before final design.

3.3.2.35 Plug valves shall be Dezurik. Provide worm gear and hand wheel operator on 4 inches and larger. On sizes less than 4-inches ball valves shall be used with quarter turn lever type operator.

3.3.2.36 Air release valves shall be ARI D-025 HDPE and shall be housed in a manhole with an open bedded bottom. Air release valves shall be located outside of the pump station site fence where possible.

3.3.2.37 Anchor bolts for the pump discharge stand must be J-type stainless steel cast in place in the wet well floor.

3.3.2.38 Two level indicators shall be marked on the inside of the wet well at a pre-measured distance for the use of draw-down tests. The markings should be clearly visible without entering the wet well, and shall be resistant to fading or reduced visibility over time due to debris or build-up. The pre-measured distance and diameter of the wet well shall be written clearly above the higher of the two levels and readable from outside of the wet well. The markings shall not be such to void the warranty of the coating on the interior of the wet well.

3.3.2.39 A canopy shall be provided on the pump station site that covers the panels. See the standard canopy detail. The canopy shall be painted Tnemec medium bronze 85BR, and shall be on a minimum 6-inch pad that spans the extents of the canopy. Engineer is responsible for reviewing the standard canopy detail and making modifications to ensure the canopy is structurally sound, and making adjustments as needed to increase the requirements. The standard detail shown is a minimum requirement and may not be sufficient for all sites. A light should be installed under the canopy with a switch with dual 48-inch fluorescent lights or similar.

3.3.2.40 A 20 foot creosoted southern pine service/light pole with all weather exterior light switches, and exterior LED flood lights shall be provided at the pump station site and shall be positioned to flood the wetwell access, valve vault access, and the front of the control panel and electrical equipment with light. Flood lights to be Philips Stonco GP Flood Series Floodlighting GP3 (Medium) LED. Heavy duty

light switch and receptacle with gasketed cover and weatherproof plates shall be provided outside of the control panels at the site near or on the light pole.

3.3.2.41 Wet well shall be sized for build-out conditions. All conditions listed below shall be met for current design and future build-out design conditions by simple adjustments in level controls or changing of pumps.

3.3.2.42 When called to run the pumps shall not run less than the manufacturer's recommendations or 1 minute, whichever is longer.

3.3.2.43 The reliable pumping capacity (defined as one pump on in a duplex station) shall be higher than the peak inflow rate in gpm into the pump station.

3.3.2.44 The pump station shall be designed to run no more than 6 cumulative hours a day.

3.3.2.45 Pumps should be selected that have an operating point at or near peak efficiency.

3.3.2.46 Pumps shall be capable of passing spheres of at least three inches in diameter. Pump suction and discharge openings shall be at least four (4) inches in diameter.

3.3.2.47 Pump stations may be required to have screening mechanisms before the pumps if larger solids will be received by the station, or if wastewater received is determined to be more solids than typical domestic wastewater.

3.3.2.48 Force mains shall be adequately sized to handle the design peak flow of the contributing sewershed and within industry standards for velocity.

3.3.2.49 The force main should enter the gravity sewer system at a point not more than two feet above the flow line of the receiving manhole entering through either an inside or outside drop at the manhole. The receiving manhole shall be lined with Raven 405 120 mil coating for new manholes. If the receiving manhole is an existing manhole, see the City's standard Manhole Lining specification for approved Type 3 or Type 4 manhole linings for force main discharge manholes.

3.3.2.50 A combination air release valve for sewage application shall be placed at high points in the force main to prevent air locking. Air release valves shall be located outside of the pump station site fence where possible. Air release valves within the pump station site are preferred to be located within the valve vault if possible. A short body valve may be required.

3.3.2.51 At design flow, a cleaning velocity of at least two feet per second shall be maintained in the force main.

3.3.2.52 Pump Station Drawings Shall include a chart showing pump conditions and ranges such as the one below:

Condition	Flow Per Pump	TDH	Total Pump Station Flow
(Pumps On)	GPM	Feet	GPM
One Pump	XX	XX	XX
Two Pumps	XX	XX	XX

3.3.3 BACK-UP POWER - Natural gas generator shall be provided on all pump station sites and shall be capable of running all equipment as a secondary power source in case of a power failure. Generator shall meet a minimum of the standards in the City's Natural Gas Fueled Engine Driven Generator Specification as outlined in Attachment A.

3.3.3.1 All generator support structures, concrete pads, site layout, etc. shall be designed accordingly for a complete standby power system at each location.

3.3.4 SCADA - Provide equipment, services, and associated components to meet the City's standard Remote Telemetry Unit, Instrumentation and SCADA System Interface Specification Attachment C and associated Standard Construction Details.

3.3.5 ELECTRICAL - Provide equipment, services, and associated components to meet the City's Attachment D Pump Station Electrical Requirements Specification and associated Standard Construction Details.

3.3.6 OTHER REQUIREMENTS - Authorized supplier of check valves shall be present on site during installation to set valve weight and make adjustments as necessary to meet design conditions as intended by the design engineer.

3.3.6.1 Contractor responsible for the design, installation, and operation of by-pass pumping operations or pumping and hauling operations needed to complete the work for the construction of the pump station and its appurtenances, including the force main. Contractor to submit a plan to the Engineer for review of operations, which should include any requests and supporting reasoning for creating surcharge conditions within the sewer system that will need to be considered and reviewed by the City as well as the design engineer. The City's review of the proposed conditions does not relieve the Contractor of any responsibility and liability of these operations, including overflows, damage to property or the sewer system, and meeting the requirements of other regulatory agencies.

3.3.6.2 Contractor to submit to the design engineer written certification from the coating manufacturer demonstrating the persons applying the Raven 405 coating are certified in the application. The application shall have a standard manufacturer's warranty from defects.

3.3.6.3 A preconstruction conference of Metro WWTP personnel with the Contractor and design engineer will be held at the pump station site.

3.3.6.4 A full set up Operations and Maintenance Manuals shall be provided for the SCADA system, pumps, motors, control panel, generator, ATS, and any other appurtenances provided on the site. 2 hard copies and 1 electronic PDF copy shall be provided to the City before ownership transfer. The manuals shall include, but not be limited to, operational instructions, emergency procedures, maintenance schedules, pump curves, parts lists, tools, spare parts, etc. Contractor to coordinate with the City to determine what asset information is to be provided by the Contractor necessary for City Works before the completion of the project.

3.3.6.5 A training session shall be conducted covering all O&M aspects of the pump station including, but not limited to operational instructions, emergency procedures, maintenance schedules etc. for City staff. The training shall be recorded on video and a copy of the video shall be provided in electronic format.

3.3.6.6 The following spare parts are to be delivered to the City before close-out:

3.3.6.6.1 3 sets of o-rings and seals for each pump

3.3.6.6.2 1 spare pump and cable

3.3.6.6.3 1 spare pressure transmitter/level control

3.3.6.6.4 All recommended spare parts as listed in the SCADA/Electrical/Stand-By Power Specifications

3.3.6.7 All spare parts shall be delivered to the Metro Wastewater Treatment Plant. A clear record of the items delivered, the date, and who they were delivered to, and a signed notification acknowledging the receipt of each part shall be documented and included in project close-out documentation.

3.3.7 STANDARD DETAILS - The following is a list of the standard details for pump stations including electrical details. Electronic versions of these standard details are available on the City website.

3.3.7.1 PS1A- Wet Well and Vault Section Detail

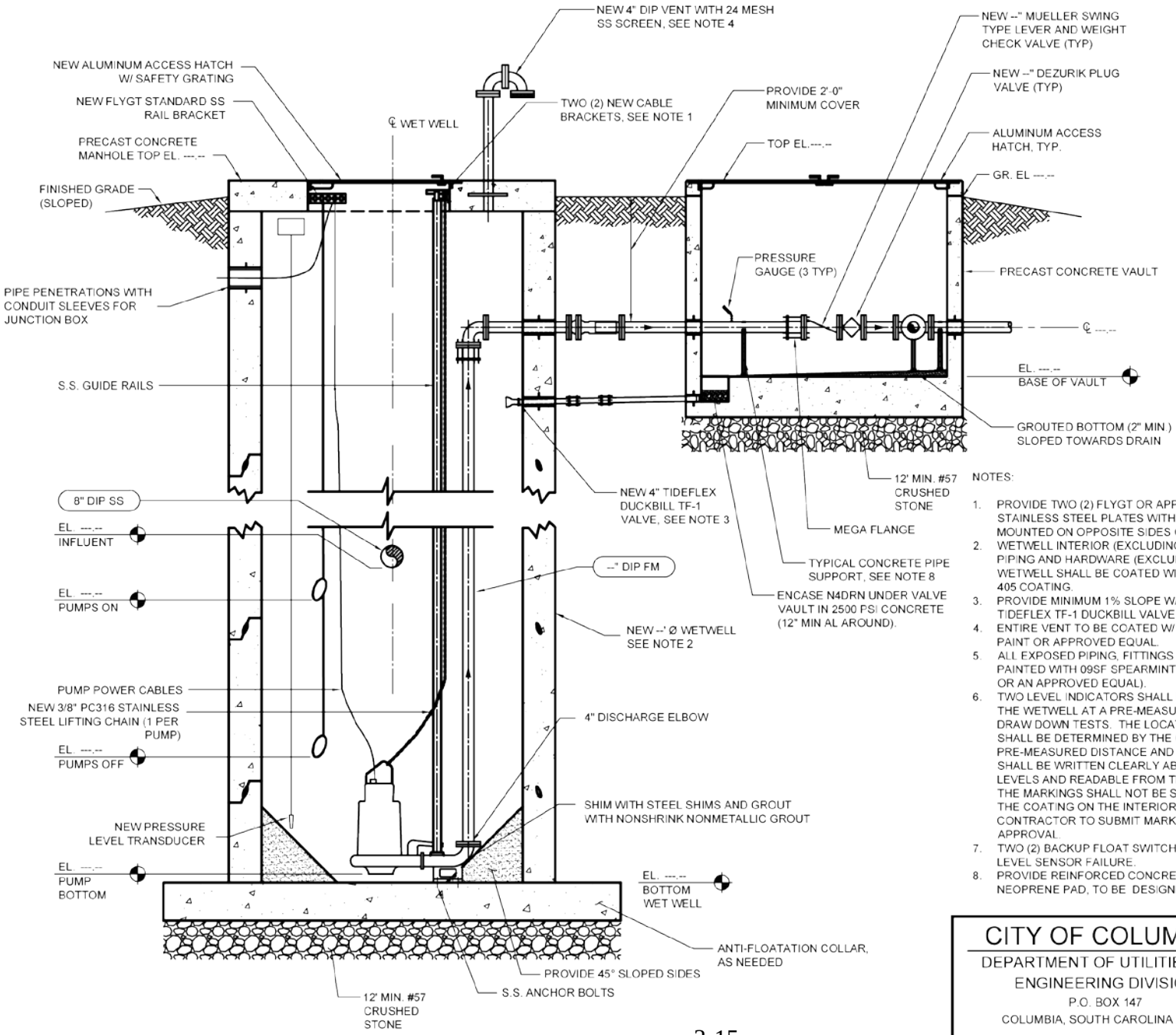

NOTES:

1. PROVIDE TWO (2) FLYGT OR APPROVED EQUAL FLAT BOLTED STAINLESS STEEL PLATES WITH FOUR (4) HOOKS ON EACH, MOUNTED ON OPPOSITE SIDES OF WETWELL ACCESS.
2. WETWELL INTERIOR (EXCLUDING BOTTOM) AND ALL EXPOSED PIPING AND HARDWARE (EXCLUDING GUIDE RAILS) IN THE WETWELL SHALL BE COATED WITH MINIMUM 120 MILS OF RAVEN 405 COATING.
3. PROVIDE MINIMUM 1% SLOPE W/ 4" DIP AND PROVIDE 4" TIDEFLEX TF-1 DUCKBILL VALVE (WETWELL SIDE).
4. ENTIRE VENT TO BE COATED W/ LIGHT GRAY 32GR TNEMEC PAINT OR APPROVED EQUAL.
5. ALL EXPOSED PIPING, FITTINGS IN THE VALVE VAULT SHALL BE PAINTED WITH 09SF SPEARMINT (GREEN SAFETY TNEMEC PAINT OR AN APPROVED EQUAL).
6. TWO LEVEL INDICATORS SHALL BE MARKED ON THE INSIDE OF THE WETWELL AT A PRE-MEASURED DISTANCE FOR THE USE OF DRAW DOWN TESTS. THE LOCATIONS OF THESE INDICATORS SHALL BE DETERMINED BY THE CITY OF COLUMBIA. THE PRE-MEASURED DISTANCE AND DIAMETER OF THE WETWELL SHALL BE WRITTEN CLEARLY ABOVE THE HIGHER OF THE TWO LEVELS AND READABLE FROM THE OUTSIDE OF THE WETWELL. THE MARKINGS SHALL NOT BE SUCH TO VOID THE WARRANTY OF THE COATING ON THE INTERIOR OF THE WETWELL. CONTRACTOR TO SUBMIT MARKING PROCESS FOR REVIEW AND APPROVAL.
7. TWO (2) BACKUP FLOAT SWITCHES THAT OPERATE IN CASE OF LEVEL SENSOR FAILURE.
8. PROVIDE REINFORCED CONCRETE PIPE SUPPORT WITH NEOPRENE PAD, TO BE DESIGNED BY ENGINEER.

CITY OF COLUMBIA DEPARTMENT OF UTILITIES AND ENGINEERING DIVISION P.O. BOX 147 COLUMBIA, SOUTH CAROLINA 29217	SCALE: N.T.S. DATE: 05/03/16 REVISED: --- DRAWING NO: PS1A
WET WELL AND VAULT SECTION DETAIL	

3.3.7.2 PS1B- Wet Well and Vault Plan Detail

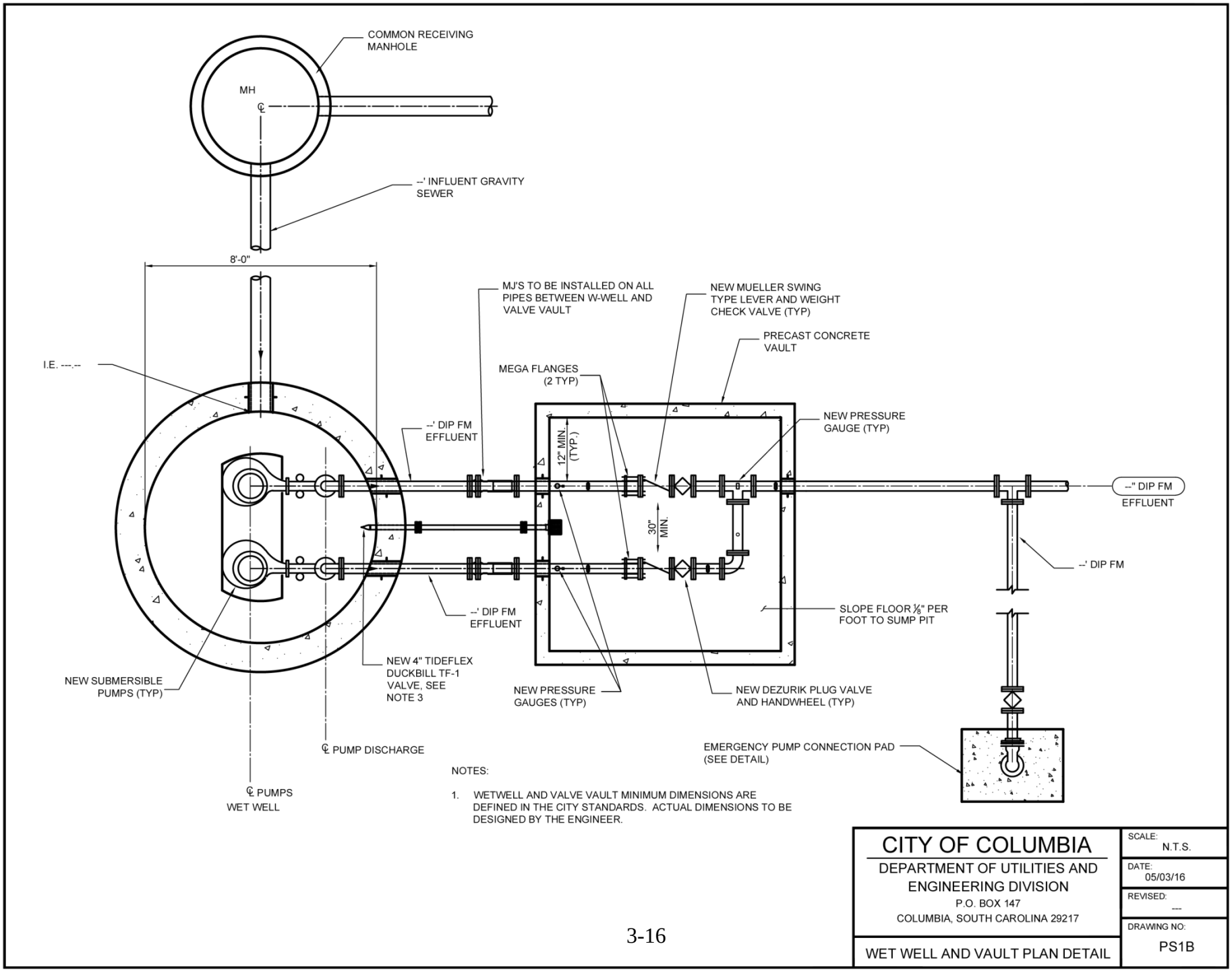

3.3.7.3 PS1C- Wet Well and Vault Plan Detail (2)

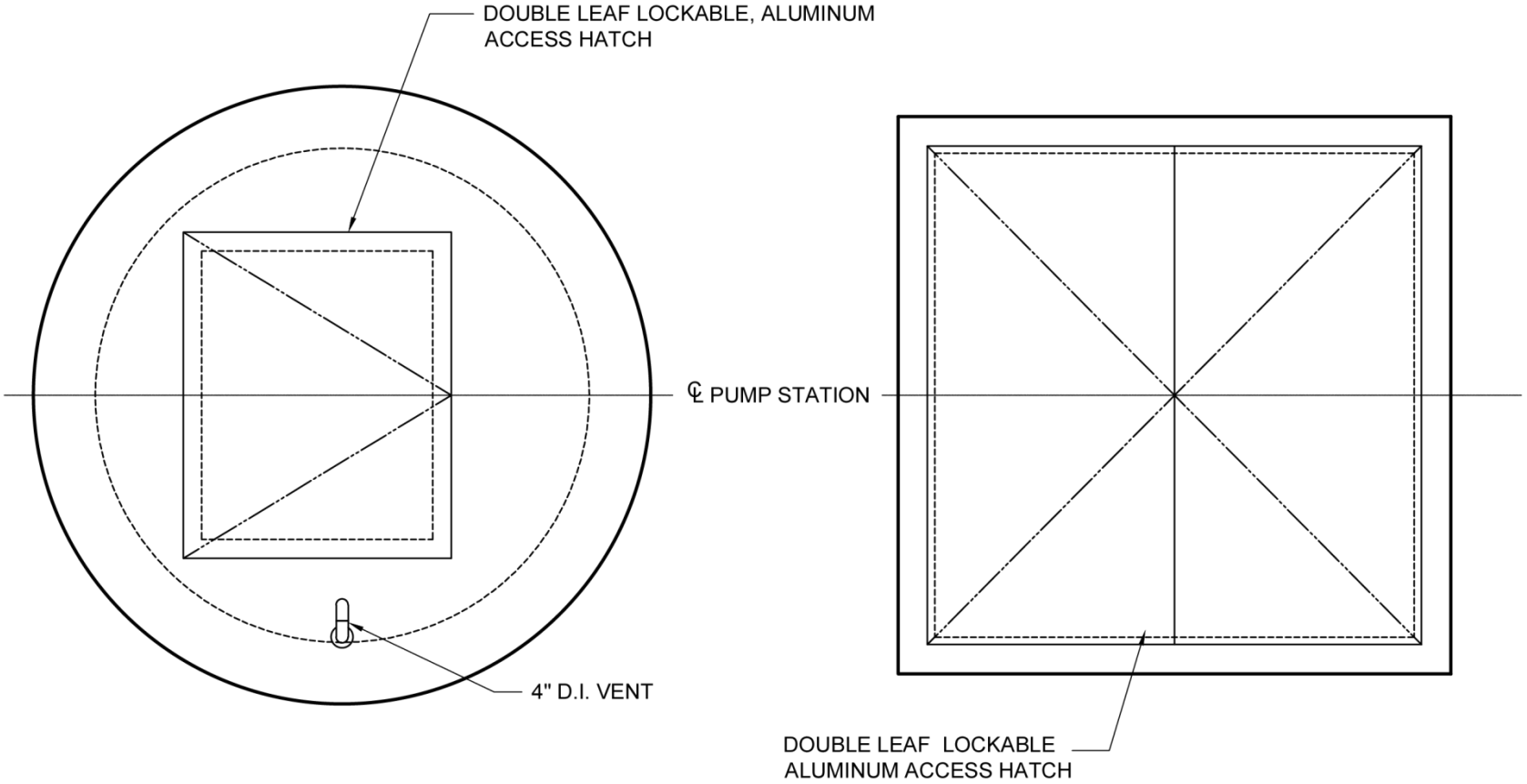

WET WELL AND VAULT
PLAN DETAIL
N.T.S.

CITY OF COLUMBIA DEPARTMENT OF UTILITIES AND ENGINEERING DIVISION P.O. BOX 147 COLUMBIA, SOUTH CAROLINA 29217	SCALE: N.T.S. DATE: 05/03/16 REVISED: --- DRAWING NO: PS1C
WET WELL AND VAULT PLAN DETAIL (2)	

3.3.7.4 PS2- Typical Pump Station Site Plan

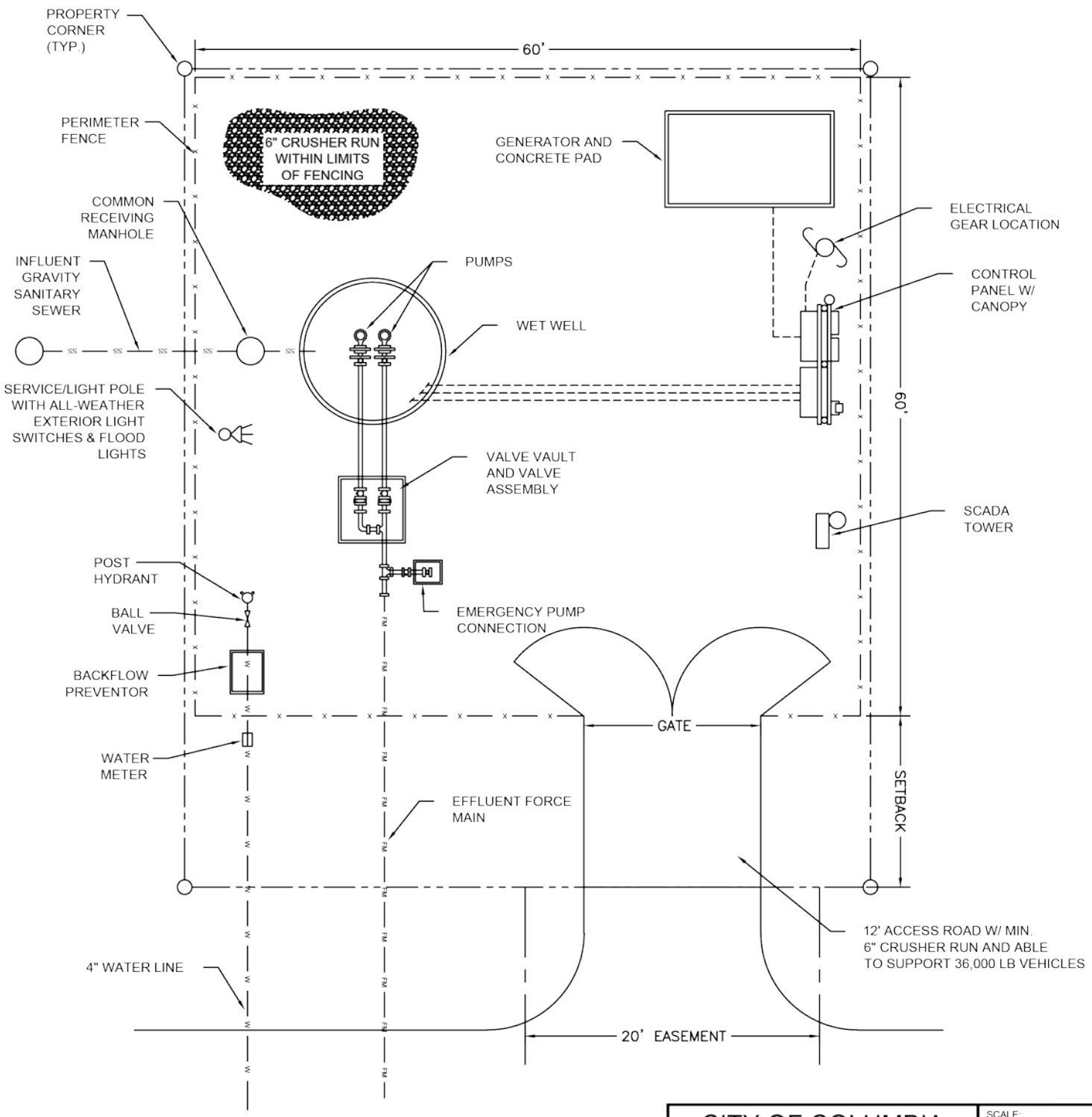

NOTE: ENGINEER TO DETERMINE IF STEEL BOLLARDS ARE NEEDED TO PROTECT EQUIPMENT AND/OR SITE.

CITY OF COLUMBIA DEPARTMENT OF UTILITIES AND ENGINEERING DIVISION P.O. BOX 147 COLUMBIA, SOUTH CAROLINA 29217	SCALE: N.T.S. DATE: 05/03/16 REVISED: --- DRAWING NO: PS2
TYPICAL PUMP STATION SITE PLAN	

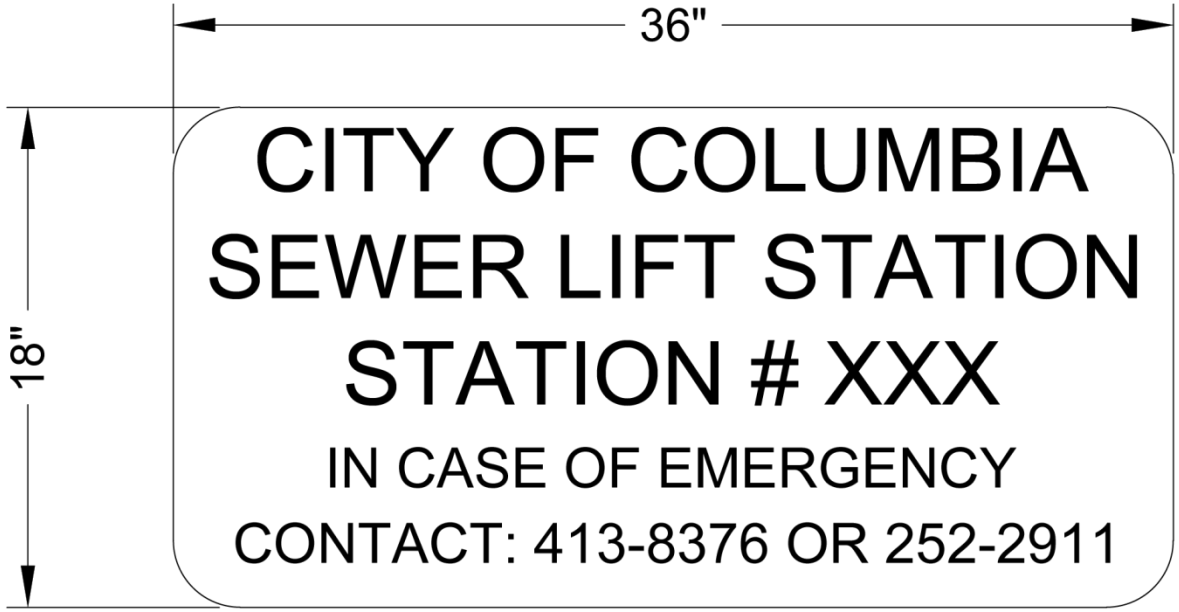

EMERGENCY SIGN NOTES:

1. SIGNS TO BE 1/8" THICK ALUMINUM
2. BACKGROUND TO BE REFLECTIVE BLUE
3. LETTERING TO BE REFLECTIVE WHITE BLOCK STYLE
4. MINIMUM TEXT DIMENSIONS SHALL BE 4" FOR ADDRESS, 1-1/2" FOR ALL OTHER TEXT. MINIMUM TEXT THICKNESS TO BE 1/4"
5. COORDINATE W/ CITY TO OBTAIN STATION NUMBER.

CITY OF COLUMBIA DEPARTMENT OF UTILITIES AND ENGINEERING DIVISION P.O. BOX 147 COLUMBIA, SOUTH CAROLINA 29217	SCALE: N.T.S. DATE: 05/03/16 REVISED: --- DRAWING NO: PS3
WEATHER-DURABLE EMERGENCY CONTACT SIGN	

3.3.7.6 PS4A- Typical Fence and Gate Detail (1)

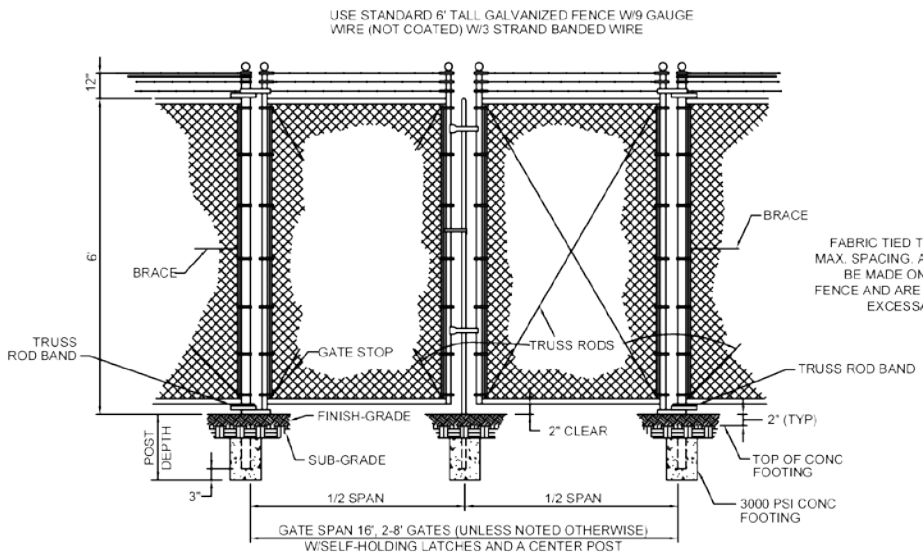

TYPICAL DOUBLE SWING GATE

NOT TO SCALE

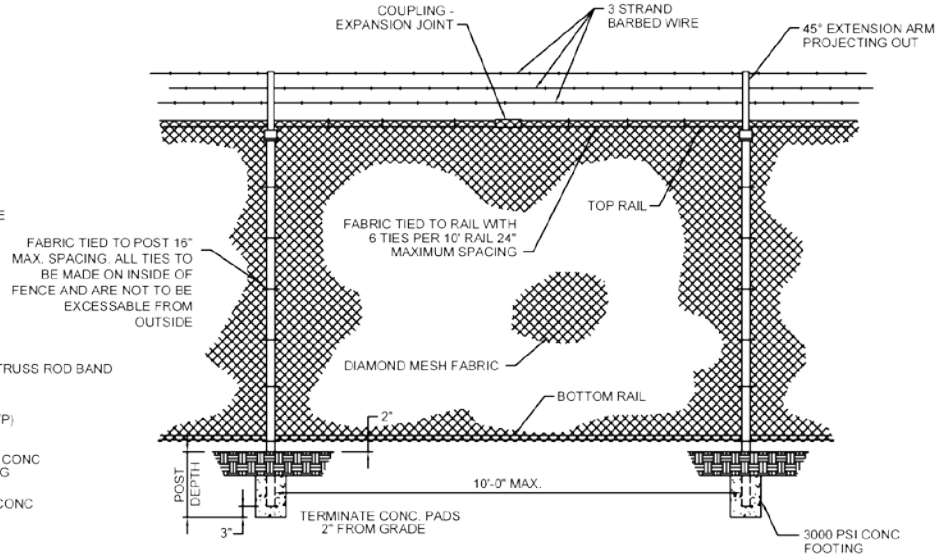

TYPICAL FENCE LINE SPAN

NOT TO SCALE

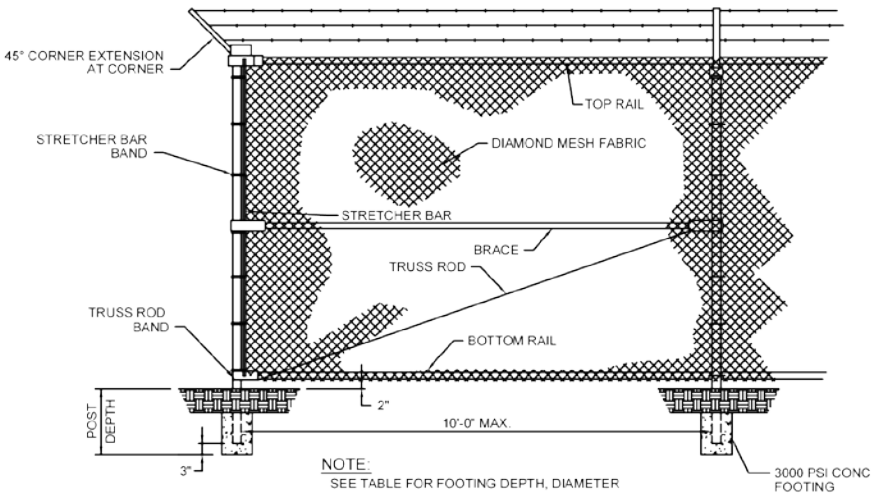

NOTE:
SEE TABLE FOR FOOTING DEPTH, DIAMETER

TYPICAL FENCE CORNER

NOT TO SCALE

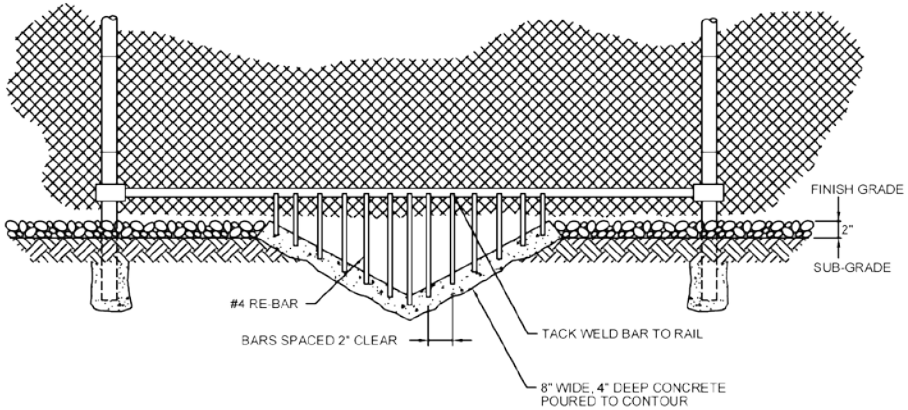

TYPICAL GUARD FOR SWALE

NOT TO SCALE

CITY OF COLUMBIA DEPARTMENT OF UTILITIES AND ENGINEERING DIVISION P.O. BOX 147 COLUMBIA, SOUTH CAROLINA 29217	SCALE: N.T.S. DATE: 05/03/16 REVISED: --- DRAWING NO: PS4A
TYPICAL FENCE AND GATE DETAIL(1)	

3.3.7.7 PS4B- Typical Fence and Gate Detail (2)

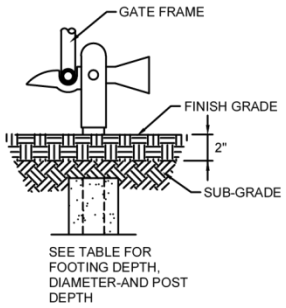

TYPICAL GATE KEEPER

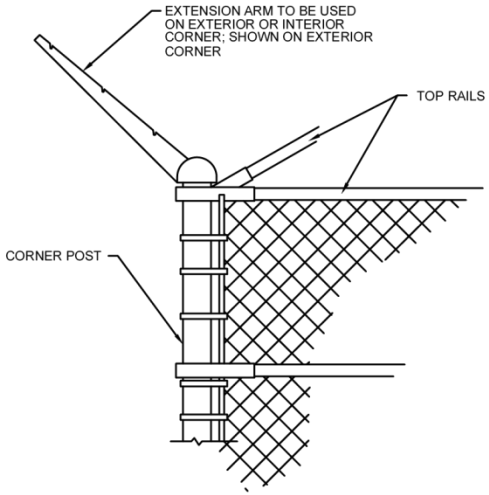

TYPICAL EXTENSION ARM CORNER & ANGLE POSTS

NOT TO SCALE

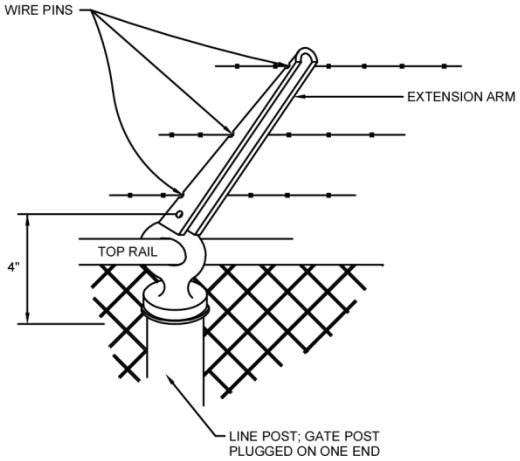

TYPICAL EXTENSION ARM GATE, END, & LINE POSTS

NOT TO SCALE

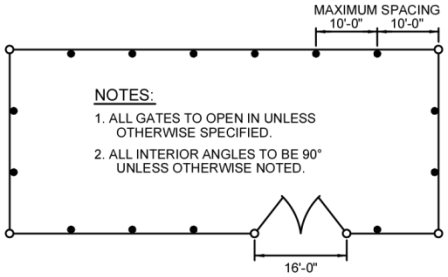

TYPICAL FENCE LAYOUT PLAN

NOT TO SCALE

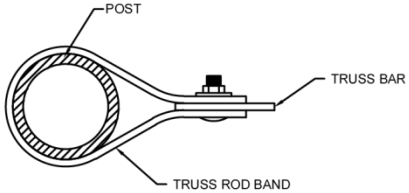

TYPICAL TRUSS ROD BAND

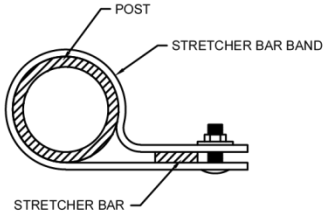

TYPICAL STRETCHER BAR BAND

STANDARD DESIGN FOR FENCING

NOT TO SCALE

NAME OF PART	PIPE SIZE NOM. O.D.	POST DEPTH IN FOOTING	MINIMUM FOOTING DIMENSIONS		
			TOP DIA.	BOTTOM DIA.	FOOTING DEPTH
LINE POST	2-1/2	3'-0"	0'-10"	1'-2"	3'-3"
END AND ANGLE POST	3	3'-0"	1'-0"	1'-4"	3'-3"
DOUBLE GATE POST WIDTH OVER 12' TO 26'	4	4'-0"	1'-4"	2'-0"	4'-3"
GATE PLUNGER STOP(OR CATCH)			0'-10"	1'-2"	3'-0"
GATE KEEPER			0'-7"	0'-10"	3'-0"
GATE FRAME	2				
TOP BOTTOM RAIL	1-5/8				
BRACE	1-5/8				
TENSION WIRE	9 GAUGE				

NOTE:
ALL DIMENSIONS ARE IN INCHES EXCEPT AS NOTED.

MINIMUM FOOTING DIMENSIONS AND SIZES OF FENCE PARTS

CITY OF COLUMBIA
DEPARTMENT OF UTILITIES AND ENGINEERING DIVISION
P.O. BOX 147
COLUMBIA, SOUTH CAROLINA 29217

TYPICAL FENCE AND GATE DETAIL(2)

SCALE: N.T.S.
DATE: 05/03/16
REVISED: ---
DRAWING NO: PS4B

3.3.7.8 PS5- Typical Pump Controls Canopy Detail

GENERAL NOTES:

1. A CANOPY SHALL BE PROVIDED ON THE PUMP STATION SITE THAT COVERS THE CONTROL PANELS.
2. THE CANOPY SHALL BE PAINTED TNEMEC MEDIUM BRONZE 85BR, AND SHALL BE ON A MINIMUM 6-INCH PAD THAT SPANS THE EXTENTS OF THE CANOPY.
3. ENGINEER IS RESPONSIBLE FOR REVIEWING THE STANDARD CANOPY DETAIL AND MAKING MODIFICATIONS TO ENSURE THE CANOPY IS STRUCTURALLY SOUND, AND MAKING ADJUSTMENTS AS NEEDED.
4. THE STANDARD DETAIL SHOWN IS A MINIMUM REQUIREMENT AND MAY NOT BE SUFFICIENT FOR ALL SITES.

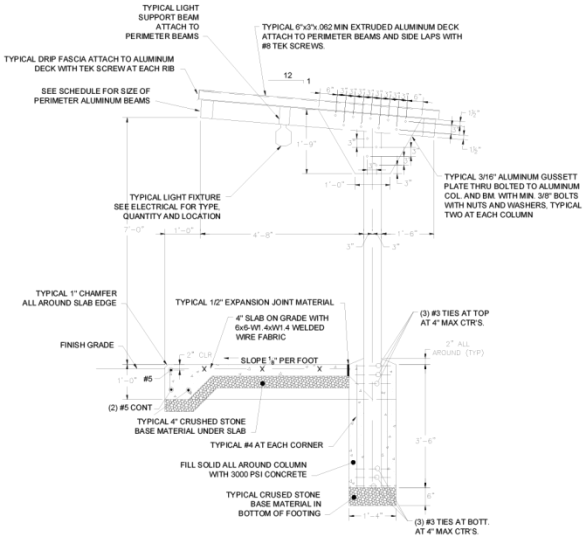

NOTE:
FABRICATOR MAY CHOOSE TO SHOP WELD BRACKET, BEAM AND COLUMN CONNECTIONS.

TYPICAL CANOPY SIDE ELEVATION
SCALE: 1/2" = 1'-0"

CANOPY BEAM / COLUMN SCHEDULE			
TYPE	CANOPY WIDTH	COLUMN SIZE	BEAM SIZE
A	4'-0 TO 6'-0"	6" x 4" x .125	4" x 4" x .150
B	6'-1 TO 8'-0"	6" x 4" x .188	6" x 4" x .188
C	10'-0 TO 12'-6"	6" x 4" x .188	6" x 4" x .190

EXTRUDED ALUMINUM ROOF DECK
SCALE: N.T.S.

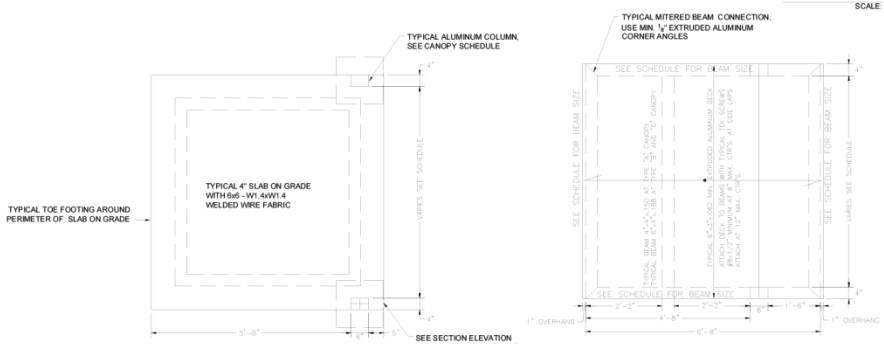

TYPICAL CANOPY FOUNDATION PLAN
SCALE: 1/2" = 1'-0"

TYPICAL CANOPY ROOF FRAMING PLAN
SCALE: 1/2" = 1'-0"

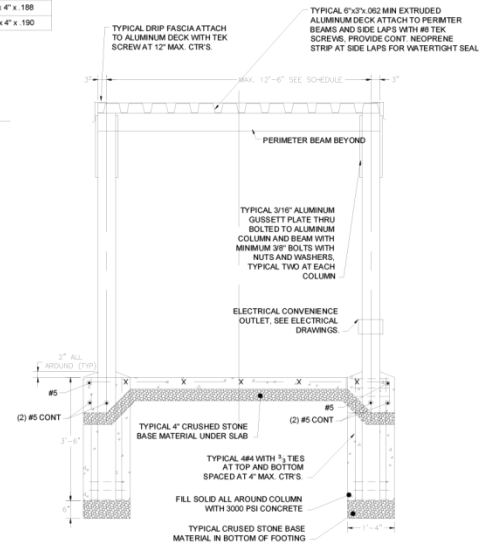

TYPICAL CANOPY FRONT ELEVATION
SCALE: 1/2" = 1'-0"

CITY OF COLUMBIA DEPARTMENT OF UTILITIES AND ENGINEERING DIVISION P.O. BOX 147 COLUMBIA, SOUTH CAROLINA 29217	SCALE: N.T.S.
	DATE: 05/03/16
	REVISED: ---
TYPICAL PUMP CONTROLS CANOPY DETAIL	DRAWING NO: PS5

3.3.7.9 PS6- Bypass Pumping Connection Detail

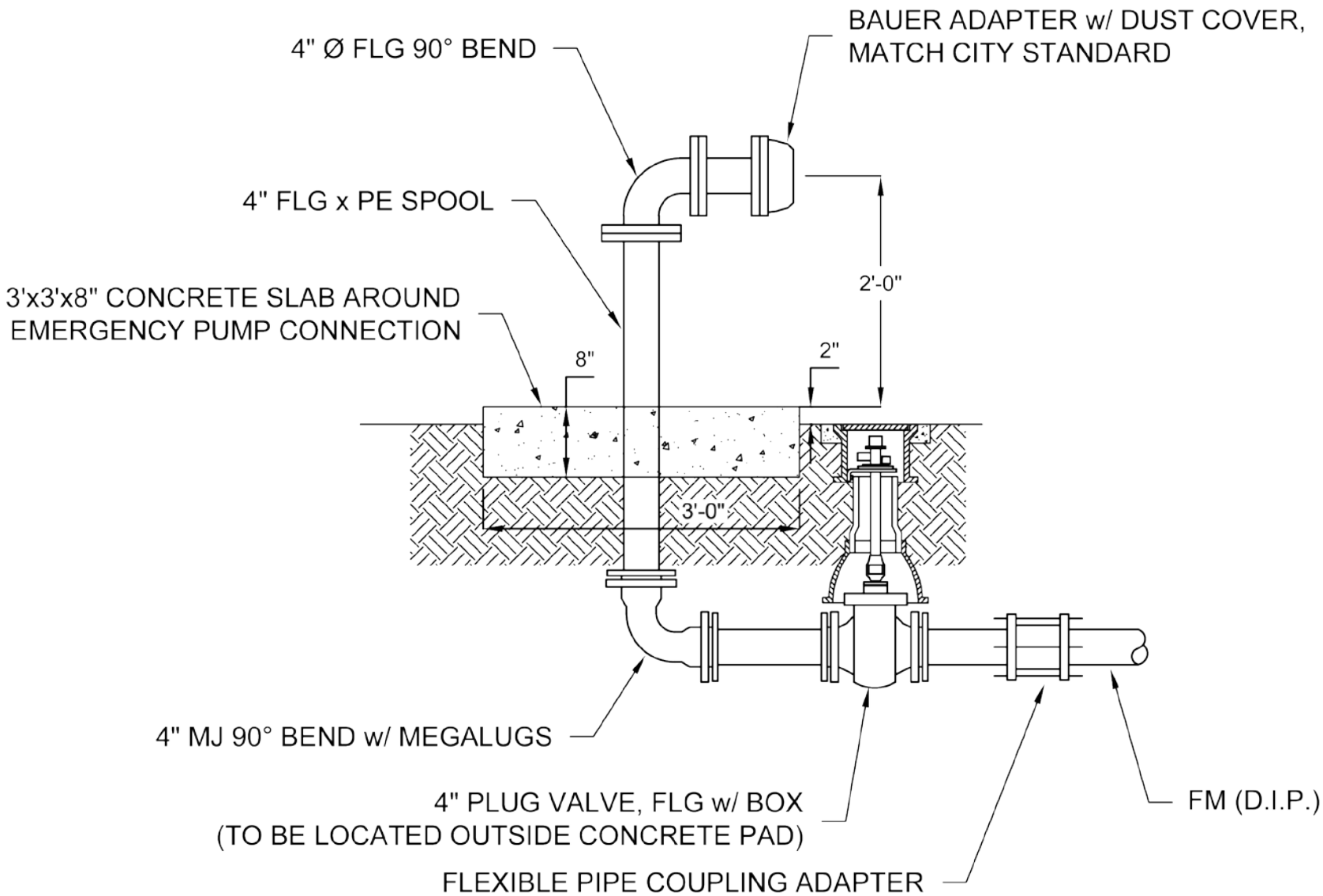

CITY OF COLUMBIA DEPARTMENT OF UTILITIES AND ENGINEERING DIVISION P.O. BOX 147 COLUMBIA, SOUTH CAROLINA 29217	SCALE: N.T.S. DATE: 05/03/16 REVISED: --- DRAWING NO: PS6
BYPASS PUMPING CONNECTION DETAIL	

3.3.7.10 PS7- Air Release Valve in Manhole Detail

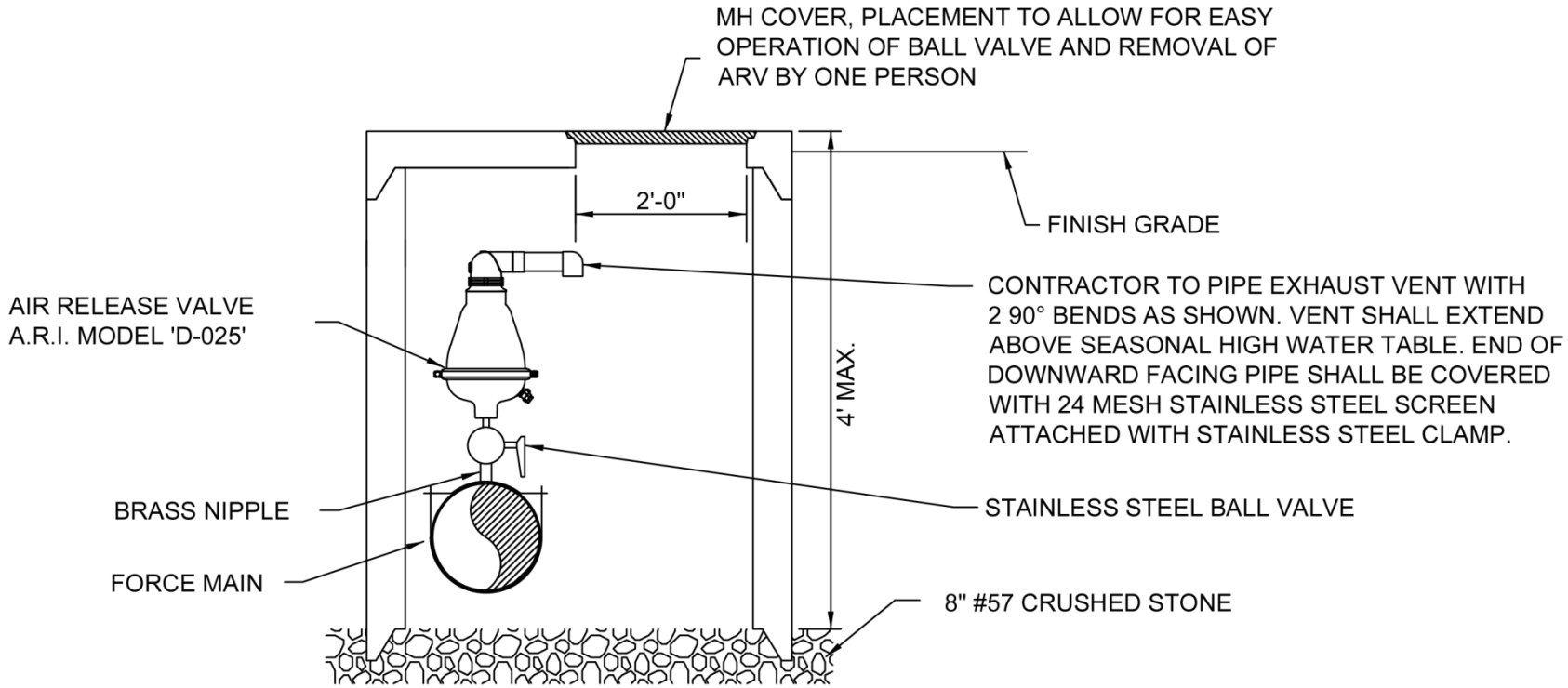

CITY OF COLUMBIA DEPARTMENT OF UTILITIES AND ENGINEERING DIVISION P.O. BOX 147 COLUMBIA, SOUTH CAROLINA 29217	SCALE: N.T.S. DATE: 05/03/16 REVISED: --- DRAWING NO: PS7
AIR RELEASE VALVE IN MANHOLE DETAIL	

3.3.7.11 PS8- Pressure Gauge Typical Installation Detail

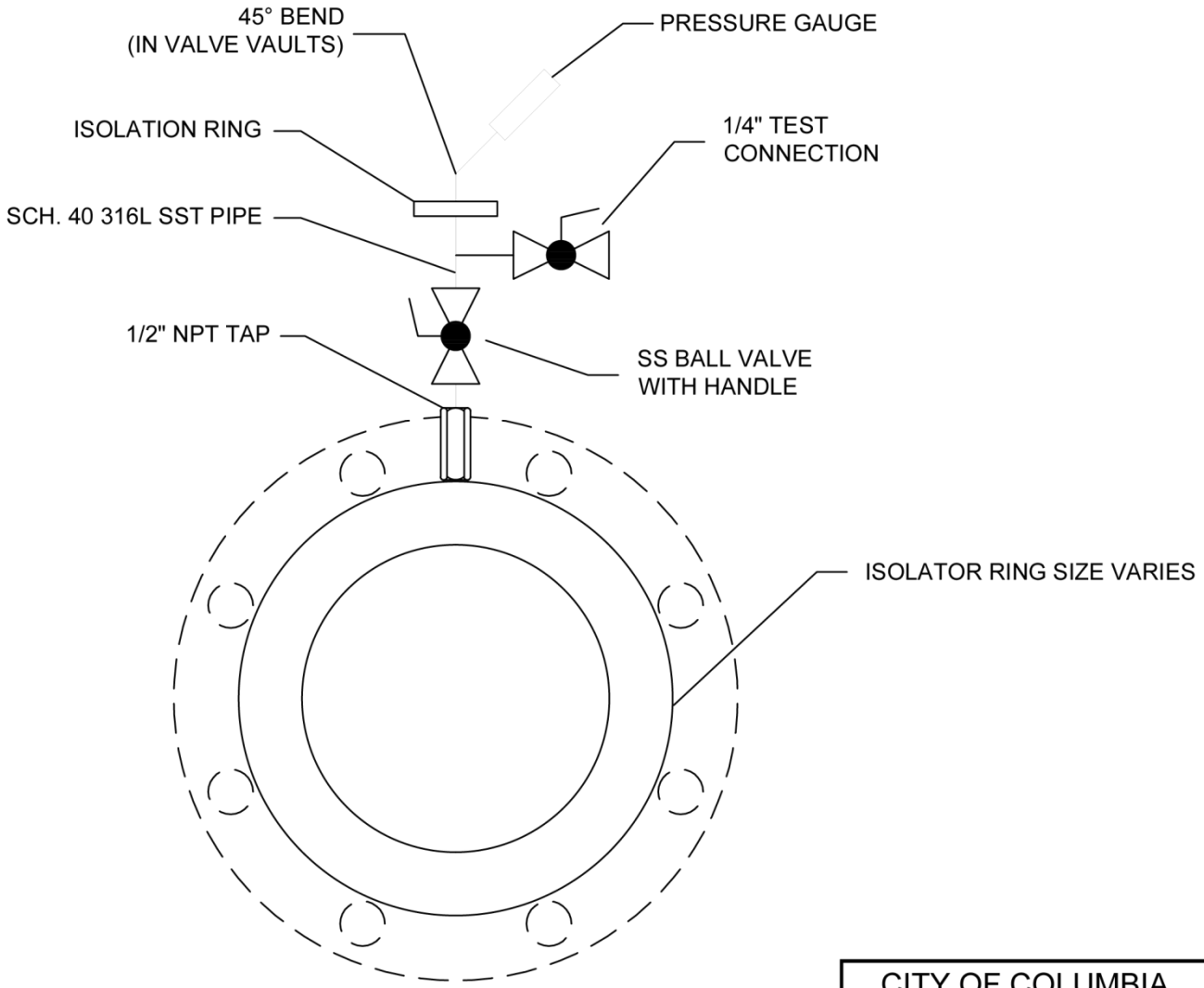

CITY OF COLUMBIA DEPARTMENT OF UTILITIES AND ENGINEERING DIVISION P.O. BOX 147 COLUMBIA, SOUTH CAROLINA 29217	SCALE: N.T.S. DATE: 05/03/16 REVISED: --- DRAWING NO: PS8
PRESSURE GAUGE TYPICAL INSTALLATION DETAIL	

3.3.7.12 PS9- Yard Hydrant Detail

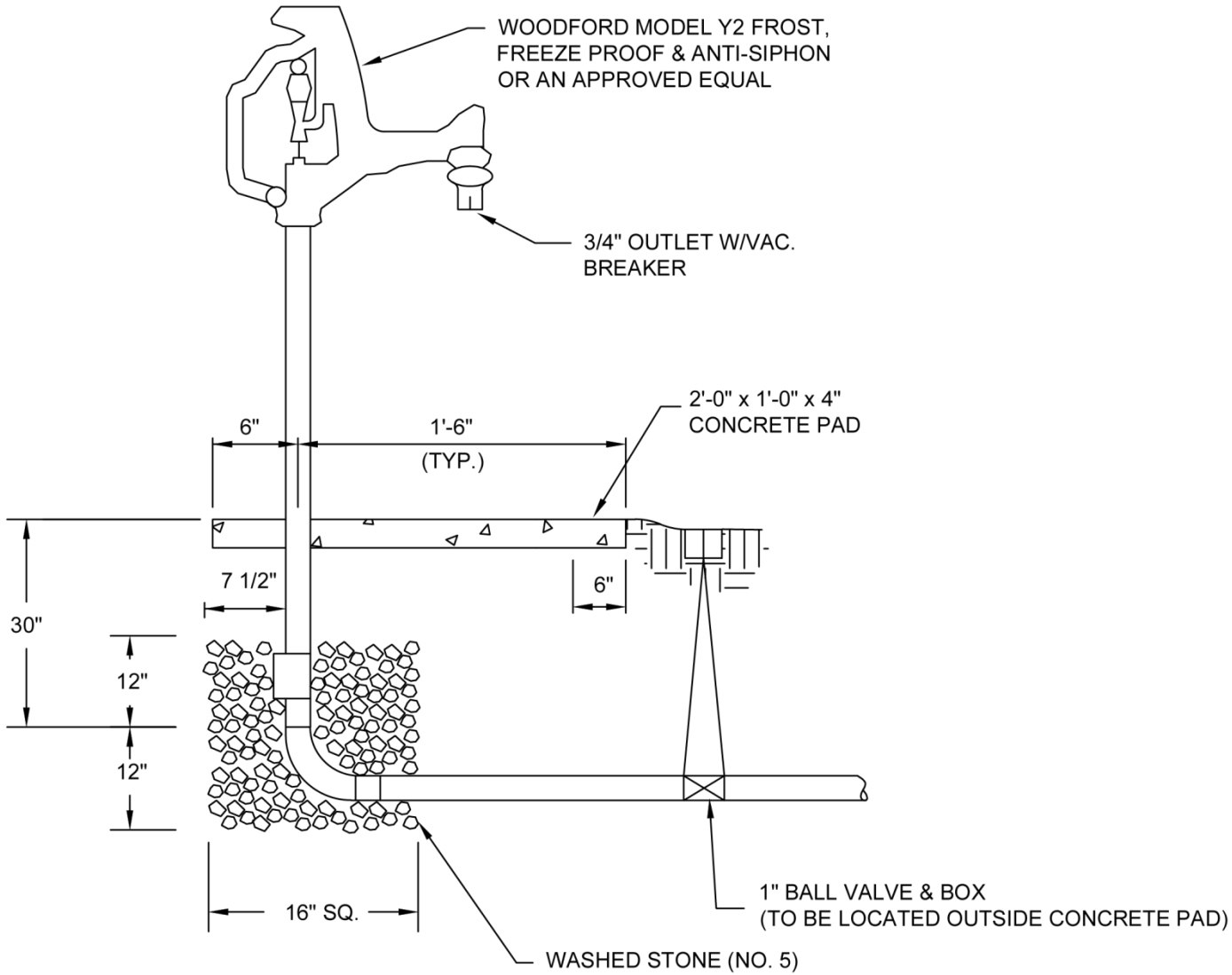

NOTE: PROVIDE A 25-FOOT 3/4" HOSE W/ADJUSTABLE BRASS SPRAY NOZZLE, ALONG WITH A WEATHER-PROOF HOSE RACK

CITY OF COLUMBIA DEPARTMENT OF UTILITIES AND ENGINEERING DIVISION P.O. BOX 147 COLUMBIA, SOUTH CAROLINA 29217	SCALE: N.T.S. DATE: 05/03/16 REVISED: --- DRAWING NO: PS9
YARD HYDRANT DETAIL	

3.3.7.13 PS10- Steel Bollard Detail

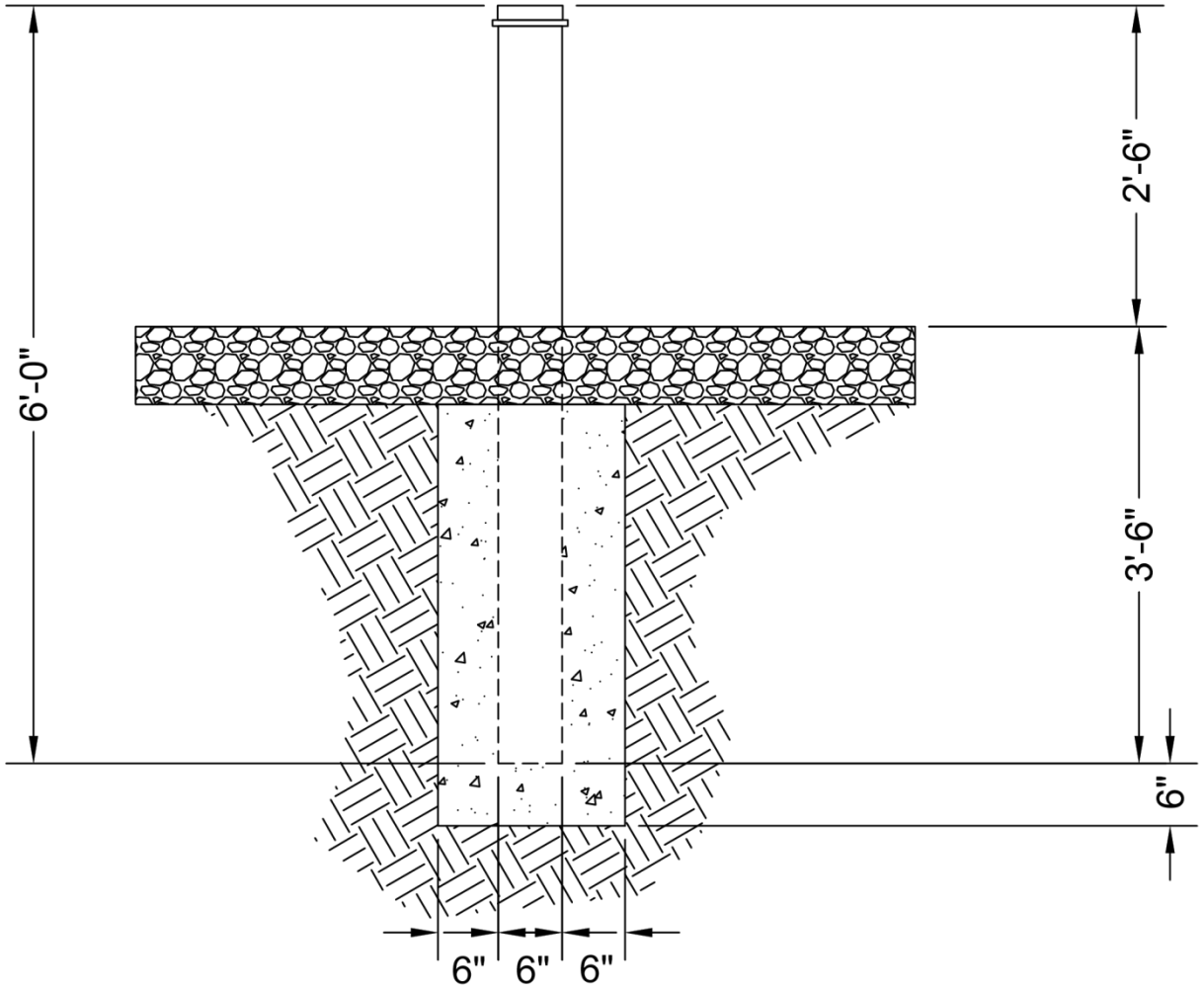

NOTES:
1. ENGINEER TO DETERMINE IF STEEL BOLLARDS ARE NEEDED TO PROTECT EQUIPMENT AND/OR SITE.
2. BOLLARD TO BE PAINTED WITH SAFETY YELLOW TNEMEC PAINT OR APPROVED EQUAL.

CITY OF COLUMBIA DEPARTMENT OF UTILITIES AND ENGINEERING DIVISION P.O. BOX 147 COLUMBIA, SOUTH CAROLINA 29217	SCALE: N.T.S. DATE: 05/03/16 REVISED: --- DRAWING NO: PS10
STEEL BOLLARD DETAIL	

STANDARD DRAWING MATRIX

DRAWING SERIES DESCRIPTION	BASE DRAWING NUMBER	DRAWING NUMBER			NOTES
		SCHEDULE&NOTES	ONE–LINE DIAGRAM	CONTROL PANEL ELEVATIONS	
DRAWING INDEX & NOTES	E0.1	–	–	–	
LEGEND, SECONDARY GROUNDING DETAIL, EMERGENCY GENERATOR FOUNDATION PAD DETAIL	E0.2	–	–	–	
JUNCTION BOX ELEVATION AT WET WELL	E0.3	–	–	–	
I/O RISER DIAGRAM	E0.4	–	–	–	
LESS THAN 20 HP 240/120V 3–PHASE 4–WIRE SERVICE, FVNR STARTER, EMERGENCY GENERATOR	–	E1.1	E1.2	E1.3	
20HP OR GREATER 480Y/277V 3–PHASE 4–WIRE SERVICE, RVSS STARTER, EMERGENCY GENERATOR	–	E2.1	E2.2	E2.3	

CITY OF COLUMBIA
DEPARTMENT OF UTILITIES AND ENGINEERING DIVISION
P.O. BOX 147
COLUMBIA, SOUTH CAROLINA 29217

ELECTRICAL DRAWING INDEX

SCALE: N.T.S.
DATE: 08/17/16
REVISED: ---
DRAWING NO: E1A

LEGEND:

- EQUIPMENT AS NOTED
- CIRCUIT BREAKER
- 20A DUPLEX RECEPTACLE, NEMA 5–20R, TYPE WR HUBBELL GFR5362SG
- WP WEATHERPROOF
- GROUND TO GROUND ROD SYSTEM
- GF GROUND FAULT CIRCUIT INTERRUPTER PROTECTION
- S SINGLE POLE, 20 AMP, 277 VOLT TOGGLE SWITCH, NOTE 1
- AIC INTERRUPTING CAPACITY IN AMPS
- BCU BARE COPPER CABLE, SOLID OR STRANDED AS NOTED
- SD/OCPD SERVICE DISCONNECT/OVERCURRENT PROTECTION DEVICE
- CONDUIT SYSTEM CONCEALED BELOW GRADE
- 10 PUMP MOTOR. HORSEPOWER INDICATED
- SEAL OFF FITTING. O–Z GEDNEY EYAX SERIES
- J NEMA 4X STAINLESS STEEL JUNCTION BOX WITH STAINLESS STEEL BACKPLATE, NOTE 2
- AREA LIGHT MOUNTED ON SERVICE POLE, LUMARK CTKRV1A–SR–CARETAKER
- N.T.S. NOT TO SCALE
- SP SURGE PROTECTION DEVICE – APT XDS SERIES, MODEL TE–##–XDS–15–4X, NOTE 13
- RVSS SOLID STATE REDUCED VOLTAGE STARTER WITH SHORTING CONTACTOR, SQUARE D ALTISTART 48
- FVNR FULL–VOLTAGE JNON–REVERSING NEMA SIZE STARTER WITH SOLID STATE OVERLOAD PROTECTION. SQUARE D 8502S SERIES
- DRY–TYPE TRANSFORMER INTEGRAL TO PUMP CONTROL PANEL
- LED PANEL SERVICE LIGHT
- S^D SERVICE LIGHT DOOR SWITCH

NOTES: LEGEND

1. PROVIDE HUBBELL HBL1281 PRESS–SWITCH WITH HUBBELL HBL17CM50 WEATHERPROOF COVER.
2. PROVIDE PENTAIR INLINE LHC###SS6 SERIES WITH HINGE COVER AND QUARTER–TURN LATCH. PROVIDE WITH POWER TERMINAL BLOCKS AND/OR TERMINAL STRIPS AS REQUIRED.
3. MOUNT WITHIN THE CONTROL PANEL.

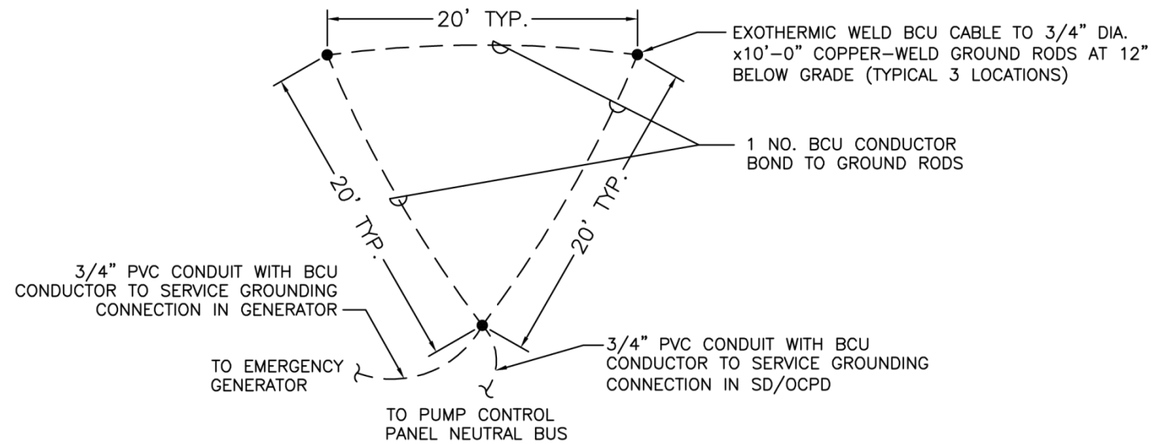

SECONDARY ELECTRICAL GROUNDING

NOT TO SCALE

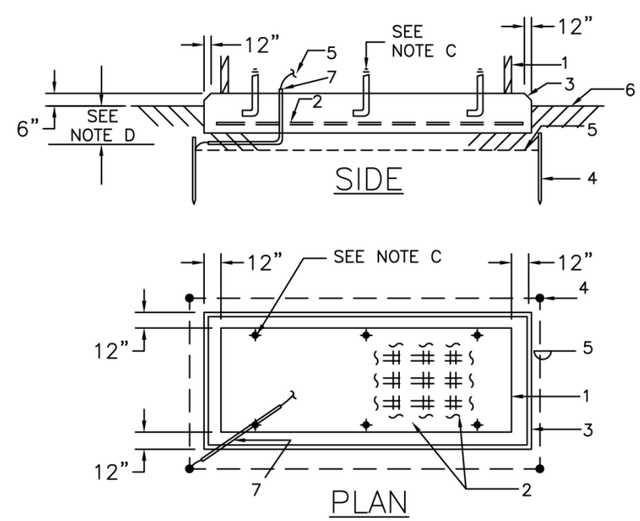

1 – GENERATOR SET ENCLOSURE OUTLINE
2 – REINFORCING STEEL, NOTE A
3 – 1" CHAMFER
4 – 3/4" x 10' COPPERCLAD GROUND ROD AND
5 – #1/0 CU BARE GROUND CONDUCTOR
6 – FINISHED GRADE
7 – 3/4" PVC, SEE NOTE B

NOTES:

A. #8 GA. STEEL WIRE MESH 6" O.C., OR #6 REBAR 12" O.C., VERTICALLY AND HORIZONTALLY.

B. CONNECT TO GENERATOR GROUND CONNECTION LUG. VERIFY STUB UP LOCATION WITH MANUFACTURERS SHOP DRAWINGS. WATERPROOF CONDUIT END WITH SEALING COMPOUND.

C. ANCHOR BOLTS FURNISHED WITH GENERATOR SET. PROVIDE SIX MINIMUM. TIE TO REINFORCING STEEL.

D. DIMENSION SHALL BE 6" (12" OVERALL DEPTH) UP TO & INCLUDING 600 KW, 12" (18" OVERALL DEPTH) LARGER THAN 600 KW,

EMERGENCY GENERATOR FOUNDATION PAD DETAIL

NOT TO SCALE

CITY OF COLUMBIA DEPARTMENT OF UTILITIES AND ENGINEERING DIVISION P.O. BOX 147 COLUMBIA, SOUTH CAROLINA 29217	SCALE: N.T.S.
	DATE: 08/17/16
	REVISED: –––
LEGEND AND DETAILS	DRAWING NO: E1B

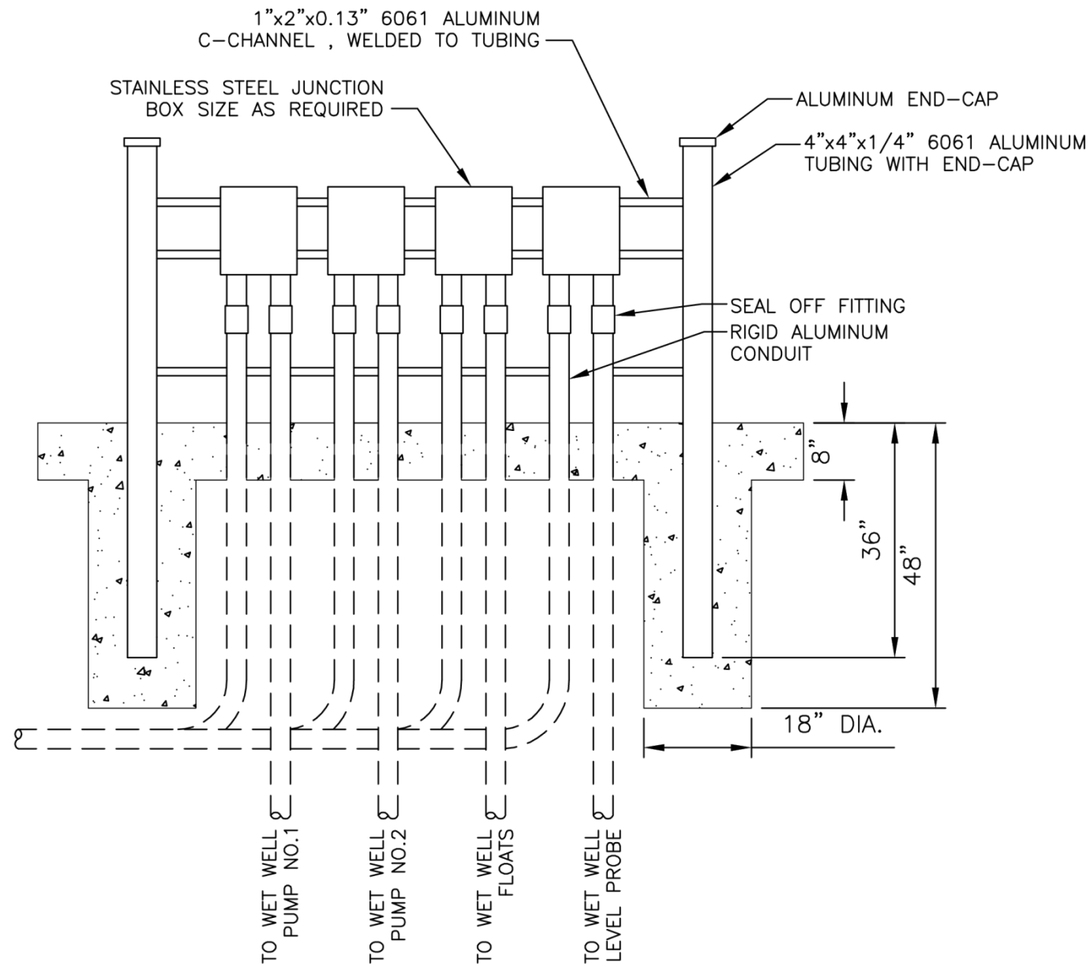

PUMP STATION JUNCTION
BOX ELEVATION

NOT TO SCALE

CITY OF COLUMBIA DEPARTMENT OF UTILITIES AND ENGINEERING DIVISION P.O. BOX 147 COLUMBIA, SOUTH CAROLINA 29217	SCALE: N.T.S. DATE: 08/17/16 REVISED: --- DRAWING NO: E1C
JUNCTION BOX ELEVATION	

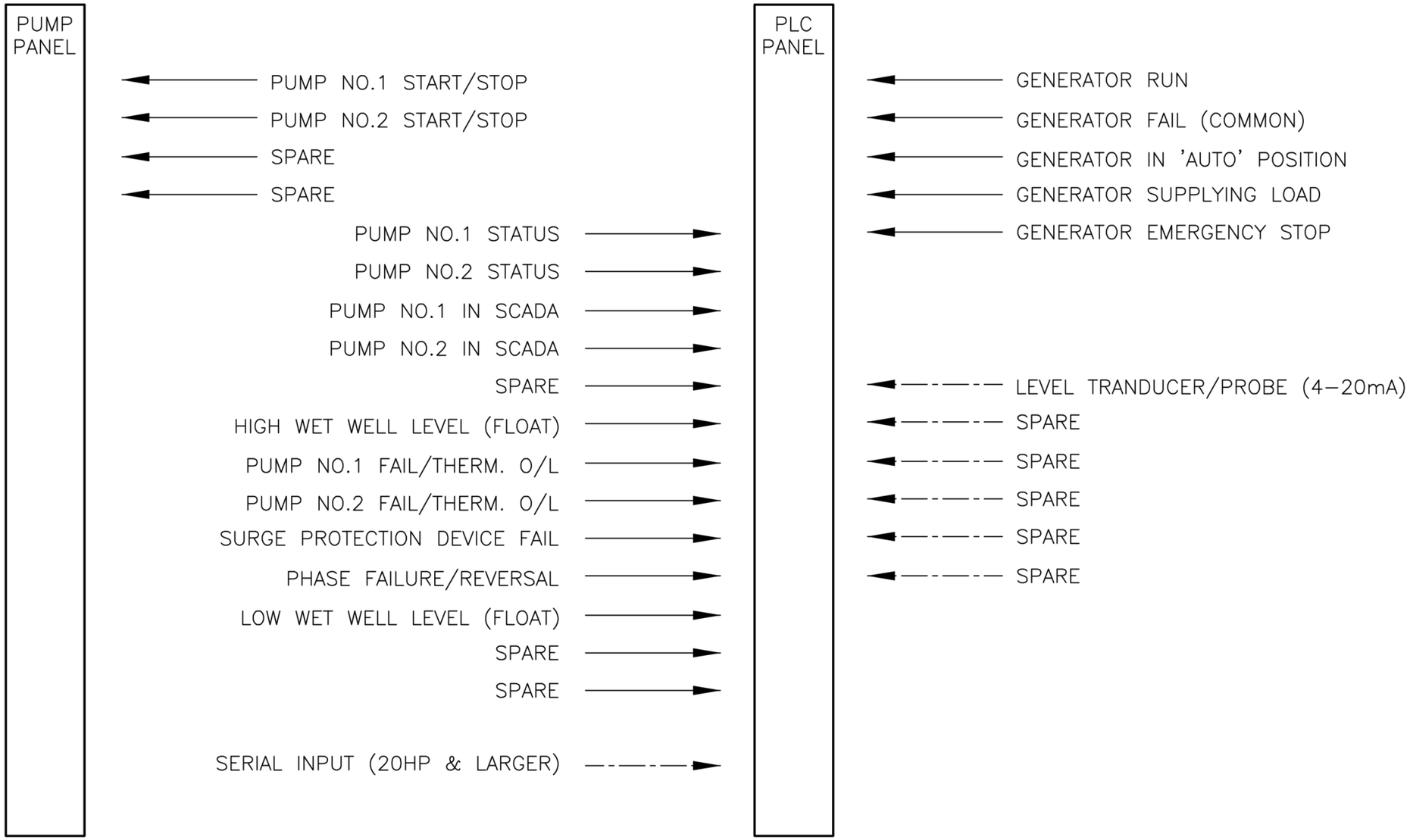

I/O RISER DIAGRAM

NOT TO SCALE

CITY OF COLUMBIA DEPARTMENT OF UTILITIES AND ENGINEERING DIVISION P.O. BOX 147 COLUMBIA, SOUTH CAROLINA 29217	SCALE: N.T.S. DATE: 08/17/16 REVISED: --- DRAWING NO: E1D
I/O RISER DIAGRAM	

DUPLEX PUMP STATION ONE LINE SCHEDULE
230V 3PH MOTORS, LESS THAN 20 HP, TYP.

ITEM#	DESCRIPTION
1	SERVICE FROM POINT OF CONNECTION. NOTE 1
2	SERVICE DISCONNECT/OVERCURRENT PROTECTION DEVICE (SD/OCPD): ENCLOSED CIRCUIT BREAKER IN NEMA 4X 316 STAINLESS STEEL ENCLOSURE. NOTE 5
3	SERVICE FEEDER AFTER SD/OCPD, WITH NEUTRAL
4	SERVICE GROUND IN SCH.80 PVC CONDUIT
5	AUTOMATIC TRANSFER SWITCH, NOTE 5,7
6	GENERATOR CIRCUIT BREAKER
7	CIRCUIT BREAKER FOR SPD, 40A/3P
8	CONDUCTORS TO SPD, 4NO.8, 1NO.8 (G)
9	THERMAL MAGNETIC CIRCUIT BREAKER
10	FULL VOLTAGE NON-REVERSING STARTER, NOTE 8
11	MOTOR FEEDER CIRCUIT, NOTE 3,4
12	SEAL-OFF FITTING
13	NEMA 4X STAINLESS STEEL JUNCTION BOX, NOTE 21
14	OMITTED
15	OMITTED
16	OMITTED
17	OMITTED
18	15A/1P CIRCUIT BREAKER, 10KAIC MIN. @ 120V
19	20A/1P CIRCUIT BREAKER, 10KAIC MIN. @ 120V
20	3/4"C. W/2NO.12 1NO. 12(G)
21	GENERATOR CONTROL CIRCUITS. THREE 1" CONDUITS WITH CONDUCTORS AS REQUIRED FOR CONTROL AND ALARM.
22	2" SCH. 80 PVC CONDUIT WITH FLOAT CABLES STUBBED THROUGH WET WELL WALL. NOTE 4
23	3/4"C W/4NO.12, 1NO.12(G) FOR FLOATS, NOTE 3, 4
24	2" SCH. 80 PVC CONDUIT WITH PROBE CABLE STUBBED THROUGH WET WELL WALL. NOTE 4
25	2" SCH. 80 PVC CONDUIT WITH PROBE CABLE, NOTE 3, 4
26	2" SCH. 80 PVC CONDUIT WITH ANTENNA CABLE
27	2"C W/NO. 14 THHN/THWN CONDUCTORS AND/OR BELDEN 5240F1 AS CABLE REQUIRED FOR SIGNAL AND CONTROL
28	20A/2P CIRCUIT BREAKER, 10KAIC MIN. @ 240V

NOTES:

1. THE EXACT LOCATION OF THE METER AND SERVICE SHALL BE COORDINATED IN THE FIELD WITH THE UTILITY COMPANY AND WITH OTHER WORK ON THE PROJECT SITE.
2. PROVIDE PERMANENT SITE. NATURAL GAS FUELED GENERATOR. FIELD COORDINATE REQUIRED RATING AND CONFIGURATION.
3. ALL CONDUITS INSTALLED EXPOSED TO ATMOSPHERE SHALL BE RIGID ALUMINUM, ALL CONDUITS INSTALLED BELOW GRADE SHALL BE SCHEDULE 80 PVC. ALL ELBOWS AND STUB-UPS TO BE RIGID ALUMINUM.
4. SEAL BOTH ENDS OF EACH CONDUIT ENTERING THE CONTROL CABINETS FROM THE JUNCTION BOXES. ADJACENT TO THE WET WELL WITH ELECTRICAL DUCT SEAL.
5. CIRCUIT BREAKER AND SWITCH OPERATING HANDLES SHALL BE A MAXIMUM OF 66" ABOVE FINISHED GRADE, LOCATE DUPLEX PUMP CONTROL PANEL, MANUAL TRANSFER SWITCH, SERVICE BREAKER, GENERATOR RECEPTACLE AND TVSS DEVICE WHERE INDICATED.
6. POSITION ELECTRICAL EQUIPMENT SO THAT ALARM LIGHT CAN BE SEEN FROM THE NEAREST ROAD.
7. THE AUTOMATIC TRANSFER SWITCH SHALL BE PROVIDED IN A NEMA 4X 316 STAINLESS STEEL ENCLOSURE, WITH A SWITCHED NEUTRAL, AND A GROUND BUS ATTACHED TO THE SWITCH ENCLOSURE (ONE MECHANICAL TERMINAL FOR EACH CONDUCTOR). PROVIDE PRODUCTS OF ASCO.
8. THE FULL VOLTAGE NON-REVERSING STARTER SHALL BE PROVIDED WITH A SQUARE D/SCHNEIDER TESYS T SOLID STATE OVERLOAD PROTECTION. PROVIDE PRODUCTS OF SQUARE D, NO SUBSTITUTIONS PERMITTED.
9. MOUNT AREA LIGHT TO THE SCADA ANTENNA POLE, 25' AFG, AIM TOWARDS THE WET WELL.
10. EQUIPMENT AND INSTALLATION SHALL CONFORM TO COLUMBIA, SOUTH CAROLINA, METRO WASTE WATER TREATMENT UTILITY CONSTRUCTION STANDARDS AND REQUIREMENTS.
11. THE SCADA SYSTEM SHALL BE PROVIDED BY MR SYSTEMS, ATLANTA, GA. CONTACT TOM HOPKINS, (678)325-2829. THE SCADA PANEL SHALL BE MOUNTED ON THE EQUIPMENT FRAME ADJACENT TO THE PUMP POWER CONTROL PANEL. THE CONTRACTOR SHALL EXTEND TWO 2" C W/ 30 NO. 14, 1 NO. 14(G) FROM THE SCADA PANEL TO THE PUMP CONTROL PANEL. THE CONTRACTOR SHALL EXTEND 1" C W/ 6 T.S. PAIR CABLES (BELDEN 5240F1) 16 AWG FROM THE SCADA PANEL TO THE PUMP CONTROL PANEL. THE CONTRACTOR SHALL EXTEND 2" C WITH SCADA ANTENNA CABLE FROM THE SCADA PANEL TO THE SCADA ANTENNA MAST.
12. ALL ATTACHMENT HARDWARE SHALL BE STAINLESS STEEL.
13. 2" SCH. 40 PVC STUBBED INTO THE WET WELL.
14. LOCATE WITHIN CONTROL PANEL. COORDINATE MODEL NUMBER WITH VOLTAGE.
15. THE CONTRACTOR SHALL HIRE MR SYSTEMS TO PERFORM A RADIO PATH STUDY OF THE SITE TO DETERMINE THE REQUIRED ANTENNA ELEVATION. FOR BIDDING PURPOSES, THE CONTRACTOR SHALL PROVIDE AN ALLOWANCE FOR A 45' CLASS 5 PRESSURE TREATED WOOD POLE WITH A 20' ALUMINUM MAST TO BE INSTALLED WHERE SHOWN. FINAL REQUIRED ELEVATION SHALL BE DETERMINED FROM THE STUDY.

    THE RADIO SURVEY SHALL LOCATE ALL MASTS AND TOWERS ALONG THE PATH. THE DETERMINED ANTENNA ELEVATION SHALL PROVIDE A MINIMUM OF 15 YEARS OF SERVICE AT THE ELEVATION DETERMINED. REFER TO THE SCADA SPECIFICATIONS.
16. THE SCADA SYSTEM SHALL MONITOR AND TRANSMIT THE POINTS AND TELEMETRY OUTLINED IN THE SCADA SPECIFICATIONS. PROVIDE BOTH DIGITAL AND ANALOG DATA TRANSMISSION AS SPECIFIED.
17. A STAINLESS STEEL BRACKET FOR SUPPORT OF THE MOTOR, FLOAT AND TRANSDUCER CABLES SHALL BE PROVIDED AT THE WET WELL HATCH.
18. PROVIDE HEAVY DUTY SUPPORT GRIPS FOR ALL CABLES AND SENSORS IN THE WET WELL. GRIPS SHALL BE DOUBLE WEAVE, CLOSED MESH STAINLESS STEEL. PROVIDE DOUBLE EYE GRIPS FOR PUMP METER CABLES. SINGLE EYE GRIPS FOR FLOAT AND TRANSDUCER CABLES.
19. EXTEND CONDUIT AND WIRE FROM THE CONTROL PANEL TO THE GENERATOR TO ENERGIZE THE COOLANT HEATER.
20. EXTEND CONDUIT AND WIRE FROM THE CONTROL PANEL TO THE GENERATOR TO ENERGIZE THE BATTERY CHARGER, SERVICE LIGHT, ANTI-CONDENSATION HEATER AND LUBE OIL HEATER.
21. REFER TO PLATE E0.2, LEGEND.
22. ADD-A-PHASE DEVICES, EITHER CAPACITIVE OR ROTARY, ARE NOT PERMITTED.
23. THE CONCRETE PAD UNDER THE EQUIPMENT FRAME SHALL EXTEND A MINIMUM OF 48" IN FRONT OF THE DEEPEST CONTROL PANEL EQUIPMENT FRAME ENCLOSURE.
24. ALL ENCLOSURES SHALL BE ATTACHED TO THE EQUIPMENT FRAME USING 316 STAINLESS STEEL FASTENERS (BOLTS, WASHERS AND NUTS), MINIMUM SIZE 1/4". PROVIDE NOT LESS THAN FOUR POINTS OF ATTACHMENT PER ENCLOSURE.

240/120V 3-PHASE 4-WIRE DELTA SERVICE
LESS THAN 20HP STATION
SCHEDULE AND NOTES

NOT TO SCALE

CITY OF COLUMBIA DEPARTMENT OF UTILITIES AND ENGINEERING DIVISION P.O. BOX 147 COLUMBIA, SOUTH CAROLINA 29217	SCALE: N.T.S.
	DATE: 08/17/16
	REVISED: ---
SCHEDULE AND NOTES	DRAWING NO: E2A

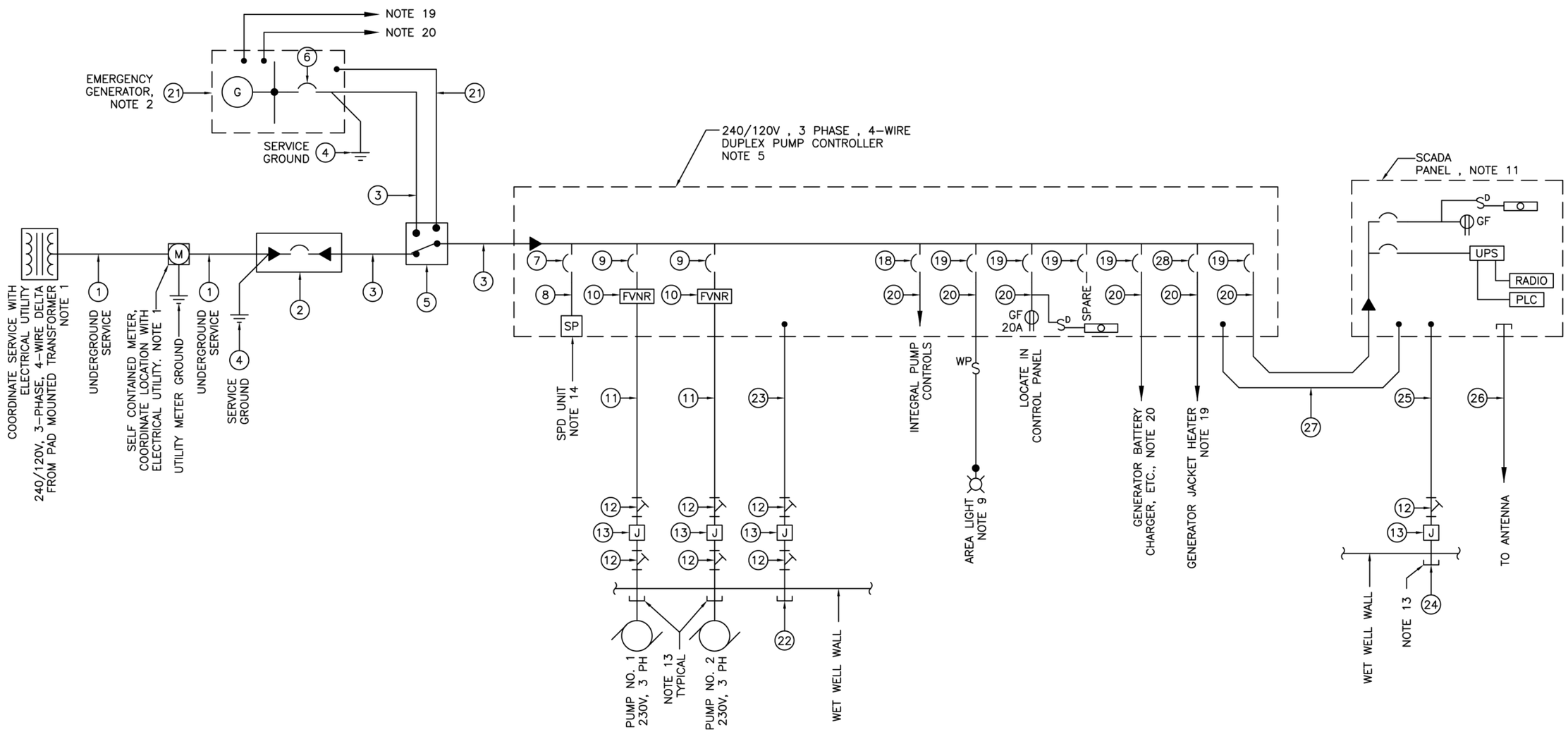

240/120V 3-PHASE 4-WIRE DELTA SERVICE
LESS THAN 20HP STATION
ONE-LINE DIAGRAM

NOT TO SCALE

CITY OF COLUMBIA DEPARTMENT OF UTILITIES AND ENGINEERING DIVISION P.O. BOX 147 COLUMBIA, SOUTH CAROLINA 29217	SCALE: N.T.S. DATE: 08/17/16 REVISED: --- DRAWING NO: E2B
ONE-LINE DIAGRAM	

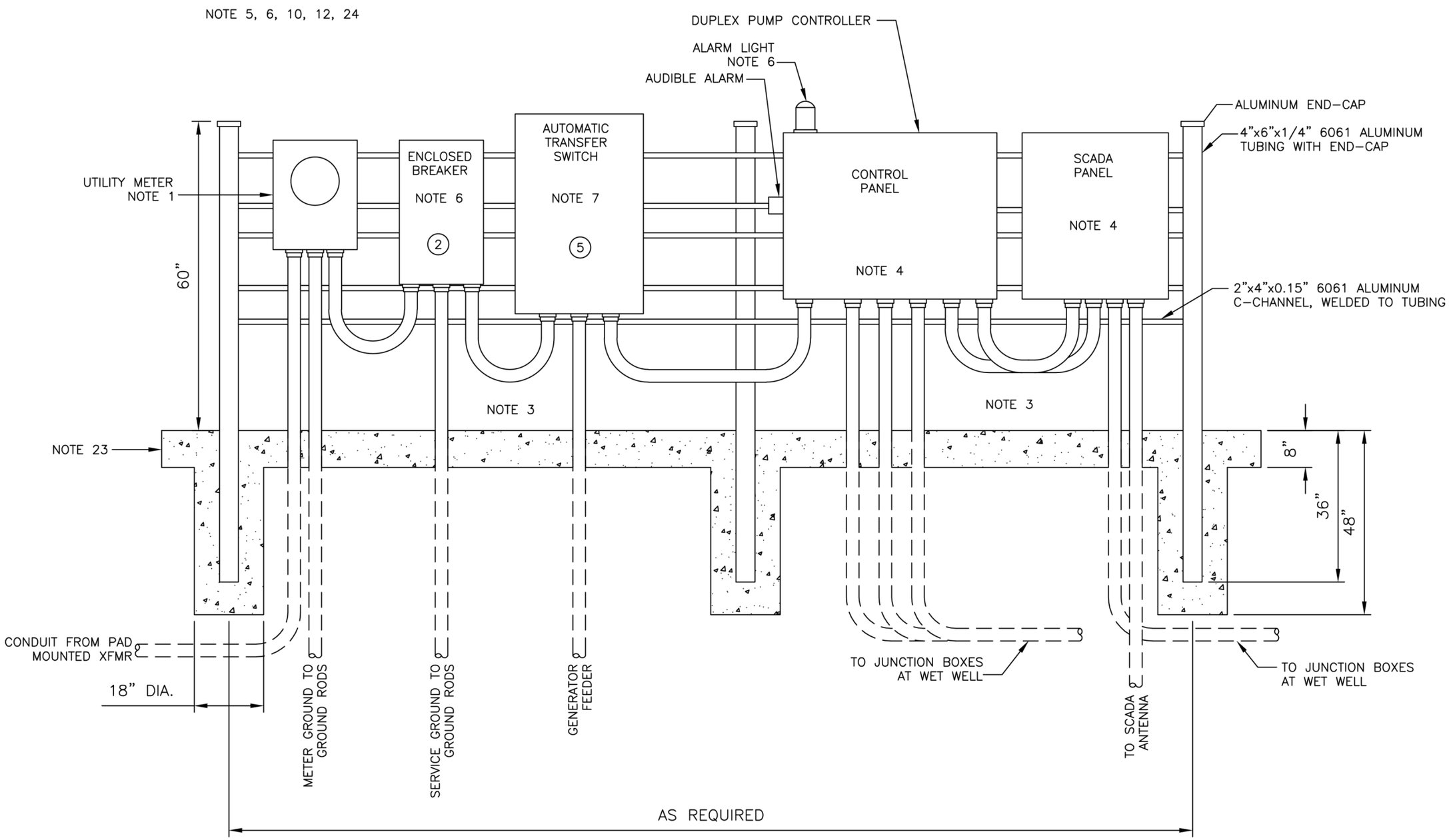

240/120V 3-PHASE 4-WIRE DELTA SERVICE
LESS THAN 20HP STATION
CONTROL PANEL ELEVATION

NOT TO SCALE

CITY OF COLUMBIA DEPARTMENT OF UTILITIES AND ENGINEERING DIVISION P.O. BOX 147 COLUMBIA, SOUTH CAROLINA 29217	SCALE: N.T.S. DATE: 08/17/16 REVISED: --- DRAWING NO: E2C
CONTROL PANEL ELEVATION	

DUPLEX PUMP STATION ONE LINE SCHEDULE 460V 3PH MOTORS 20 HP AND GREATER, TYP.	
ITEM#	DESCRIPTION
1	SERVICE FROM POINT OF CONNECTION. NOTE 1
2	SERVICE DISCONNECT/OVERCURRENT PROTECTION DEVICE (SD/OCPD): ENCLOSED CIRCUIT BREAKER IN NEMA 4X 316 STAINLESS STEEL ENCLOSURE. NOTE 5
3	SERVICE FEEDER AFTER SD/OCPD, WITH NEUTRAL
4	SERVICE GROUND IN SCH.80 PVC CONDUIT
5	AUTOMATIC TRANSFER SWITCH, NOTE 5, 7
6	GENERATOR BREAKER
7	CIRCUIT BREAKER FOR SPD, 40A/3P
8	CONDUCTORS TO SPD, 4NO.8, 1NO.8 (G)
9	THERMAL MAGNETIC CIRCUIT BREAKER, 14KAIC MIN. @480V
10	REDUCED VOLTAGE SOLID STATE STARTER, NOTE
11	MOTOR FEEDER CIRCUIT, NOTE 3, 4
12	SEAL–OFF FITTING
13	NEMA 4X STAINLESS STEEL JUNCTION BOX, NOTE 21
14	20A/2P CIRCUIT BREAKER, 14KAIC MIN. 480V
15	7.5KVA TRANSFORMER
16	40A/2P CIRCUIT BREAKER, 10KAIC MIN. @ 240V
17	NO.8 BCU TO GROUND RODS
18	15A/1P CIRCUIT BREAKER, 10 000 MIN. A.I.C. @ 120V
19	20A/1P CIRCUIT BREAKER, 10 000 MIN. A.I.C. @ 120V
20	3/4"C. W/2NO.12 1NO. 12(G)
21	GENERATOR CONTROL CIRCUITS. THREE 1" CONDUITS WITH CONDUCTORS AS REQUIRED FOR CONTROL AND ALARM.
22	2" SCH. 80 PVC CONDUIT WITH FLOAT CABLES STUBBED THROUGH WET WELL WALL. NOTE 4
23	3/4"C W/4NO.12, 1NO.12(G) FOR FLOATS, NOTE 3,4
24	2" SCH. 80 PVC CONDUIT WITH PROBE CABLE STUBBED THROUGH WET WELL WALL. NOTE 4
25	2" SCH. 80 PVC CONDUIT WITH PROBE CABLE, NOTE 3,4
26	2" SCH. 80 PVC CONDUIT WITH ANTENNA CABLE
27	2"C W/NO. 14 THHN/THWN CONDUCTORS AND/OR BELDEN 524OF1 AS CABLE REQUIRED FOR SIGNAL AND CONTROL
28	20A/2P CIRCUIT BREAKER, 10KAIC MIN. @ 240V

NOTES:

1. THE EXACT LOCATION OF THE METER AND SERVICE SHALL BE COORDINATED IN THE FIELD WITH THE UTILITY COMPANY AND WITH OTHER WORK ON THE PROJECT SITE.
2. PROVIDE PERMANENT SITE. NATURAL GAS FUELED GENERATOR. FIELD COORDINATE REQUIRED RATING AND CONFIGURATION.
3. ALL CONDUITS INSTALLED EXPOSED TO ATMOSPHERE SHALL BE RIGID ALUMINUM, ALL CONDUITS INSTALLED BELOW GRADE SHALL BE SCHEDULE 80 PVC. ALL ELBOWS AND STUB–UPS TO BE RIGID ALUMINUM.
4. SEAL BOTH ENDS OF EACH CONDUIT ENTERING THE CONTROL CABINETS FROM THE JUNCTION BOXES. ADJACENT TO THE WET WELL WITH ELECTRICAL DUCT SEAL.
5. CIRCUIT BREAKER AND SWITCH OPERATING HANDLES SHALL BE A MAXIMUM OF 66" ABOVE FINISHED GRADE, LOCATE DUPLEX PUMP CONTROL PANEL, MANUAL TRANSFER SWITCH, SERVICE BREAKER, GENERATOR RECEPTACLE AND TVSS DEVICE WHERE INDICATED.
6. POSITION ELECTRICAL EQUIPMENT SO THAT ALARM LIGHT CAN BE SEEN FROM THE NEAREST ROAD.
7. THE AUTOMATIC TRANSFER SWITCH SHALL BE PROVIDED IN A NEMA 4X 316 STAINLESS STEEL ENCLOSURE, WITH A SWITCHED NEUTRAL, AND A GROUND BUS ATTACHED TO THE SWITCH ENCLOSURE (ONE MECHANICAL TERMINAL FOR EACH CONDUCTOR). PROVIDE PRODUCTS OF ASCO.
8. THE REDUCED VOLTAGE SOLID STATE STARTER SHALL BE PROVIDED WITH AN INTEGRAL OR SEPARATE SHORTING CONTACTOR. PROVIDE PRODUCTS OF SQUARE D. ALTISTART 48, NO SUBSTITUTIONS PERMITTED.
9. MOUNT AREA LIGHT TO THE SCADA ANTENNA POLE, 25' AFG, AIM TOWARDS THE WET WELL.
10. EQUIPMENT AND INSTALLATION SHALL CONFORM TO COLUMBIA, SOUTH CAROLINA, METRO WASTE WATER TREATMENT UTILITY CONSTRUCTION STANDARDS AND REQUIREMENTS.
11. THE SCADA SYSTEM SHALL BE PROVIDED BY MR SYSTEMS, ATLANTA, GA. CONTACT TOM HOPKINS, (678)325–2829. THE SCADA PANEL SHALL BE MOUNTED ON THE EQUIPMENT FRAME ADJACENT TO THE PUMP POWER CONTROL PANEL. THE CONTRACTOR SHALL EXTEND TWO 2" C W/ 30 NO. 14, 1 NO. 14(G) FROM THE SCADA PANEL TO THE PUMP CONTROL PANEL. THE CONTRACTOR SHALL EXTEND 1" C W/ 6 T.S. PAIR CABLES (BELDEN 524OF1) 16 AWG FROM THE SCADA PANEL TO THE PUMP CONTROL PANEL. THE CONTRACTOR SHALL EXTEND 2" C WITH SCADA ANTENNA CABLE FROM THE SCADA PANEL TO THE SCADA ANTENNA MAST.
12. ALL ATTACHMENT HARDWARE SHALL BE STAINLESS STEEL.
13. 2" SCH. 40 PVC STUBBED INTO THE WET WELL.
14. LOCATE WITHIN CONTROL PANEL. COORDINATE MODEL NUMBER WITH VOLTAGE.
15. THE CONTRACTOR SHALL HIRE MR SYSTEMS TO PERFORM A RADIO PATH STUDY OF THE SITE TO DETERMINE THE REQUIRED ANTENNA ELEVATION. FOR BIDDING PURPOSES, THE CONTRACTOR SHALL PROVIDE AN ALLOWANCE FOR A 45' CLASS 5 PRESSURE TREATED WOOD POLE WITH A 20' ALUMINUM MAST TO BE INSTALLED WHERE SHOWN. FINAL REQUIRED ELEVATION SHALL BE DETERMINED FROM THE STUDY.

    THE RADIO SURVEY SHALL LOCATE ALL MASTS AND TOWERS ALONG THE PATH. THE DETERMINED ANTENNA ELEVATION SHALL PROVIDE A MINIMUM OF 15 YEARS OF SERVICE AT THE ELEVATION DETERMINED. REFER TO THE SCADA SPECIFICATIONS.
16. THE SCADA SYSTEM SHALL MONITOR AND TRANSMIT THE POINTS AND TELEMETRY OUTLINED IN THE SCADA SPECIFICATIONS. PROVIDE BOTH DIGITAL AND ANALOG DATA TRANSMISSION AS SPECIFIED.
17. A STAINLESS STEEL BRACKET FOR SUPPORT OF THE MOTOR, FLOAT AND TRANSDUCER CABLES SHALL BE PROVIDED AT THE WET WELL HATCH.
18. PROVIDE HEAVY DUTY SUPPORT GRIPS FOR ALL CABLES AND SENSORS IN THE WET WELL. GRIPS SHALL BE DOUBLE WEAVE, CLOSED MESH STAINLESS STEEL. PROVIDE DOUBLE EYE GRIPS FOR PUMP METER CABLES. SINGLE EYE GRIPS FOR FLOAT AND TRANSDUCER CABLES.
19. EXTEND CONDUIT AND WIRE FROM THE CONTROL PANEL TO THE GENERATOR TO ENERGIZE THE COOLANT HEATER.
20. EXTEND CONDUIT AND WIRE FROM THE CONTROL PANEL TO THE GENERATOR TO ENERGIZE THE BATTERY CHARGER, SERVICE LIGHT, ANTI–CONDENSATION HEATER AND LUBE OIL HEATER.
21. REFER TO PLATE E0.2, LEGEND.
22. ADD–A–PHASE DEVICES, EITHER CAPACITIVE OR ROTARY, ARE NOT PERMITTED.
23. THE CONCRETE PAD UNDER THE EQUIPMENT FRAME SHALL EXTEND A MINIMUM OF 48" IN FRONT OF THE DEEPEST CONTROL PANEL EQUIPMENT FRAME ENCLOSURE.
24. ALL ENCLOSURES SHALL BE ATTACHED TO THE EQUIPMENT FRAME USING 316 STAINLESS STEEL FASTENERS (BOLTS, WASHERS AND NUTS), MINIMUM SIZE 1#4". PROVIDE NOT LESS THAN FOUR POINTS OF ATTACHMENT PER ENCLOSURE.

480Y/220V 3–PHASE 4–WIRE DELTA SERVICE
20HP OR GREATER STATION
SCHEDULE AND NOTES

NOT TO SCALE

CITY OF COLUMBIA DEPARTMENT OF UTILITIES AND ENGINEERING DIVISION P.O. BOX 147 COLUMBIA, SOUTH CAROLINA 29217	SCALE: N.T.S.
	DATE: 08/17/16
	REVISED: ---
SCHEDULE AND NOTES	DRAWING NO: E3A

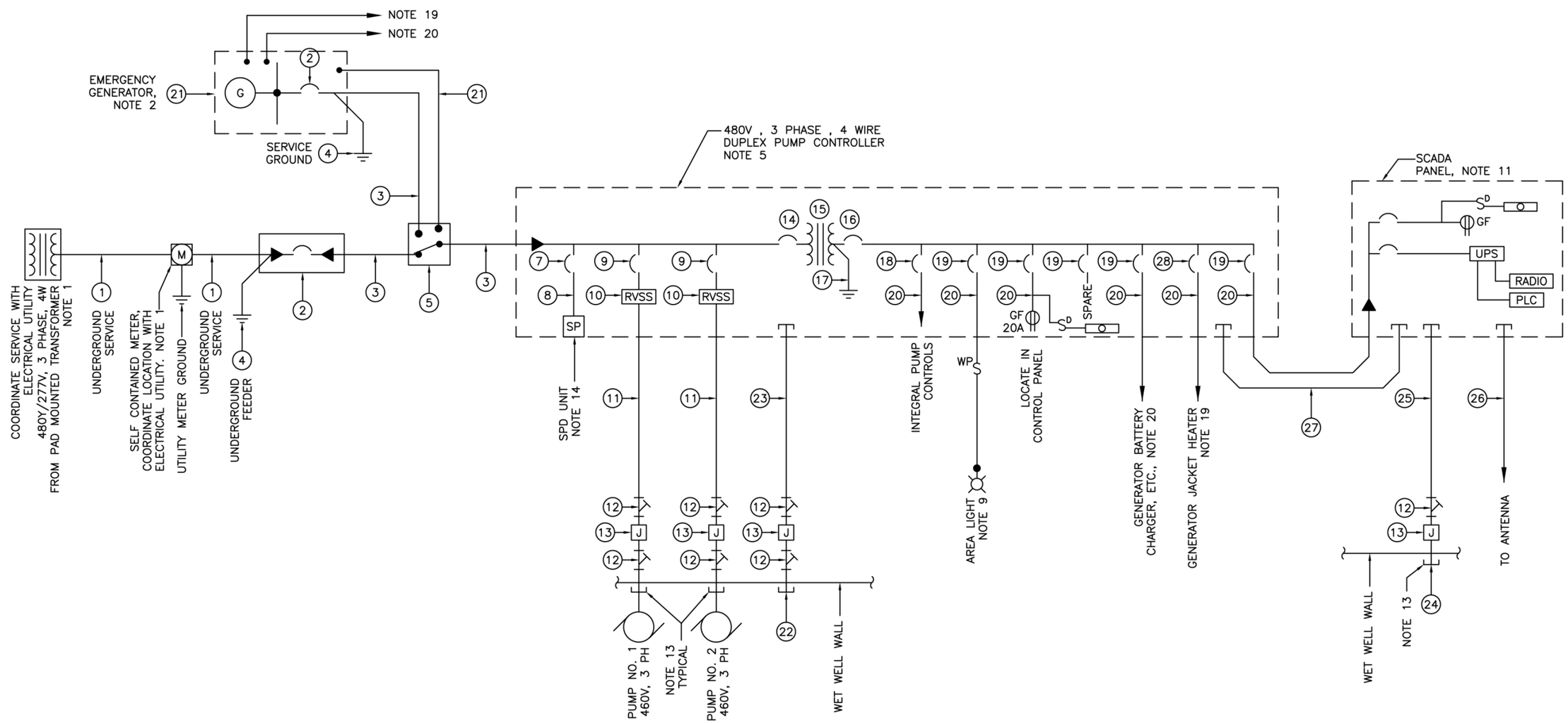

480Y/220V 3-PHASE 4-WIRE DELTA SERVICE
20HP OR GREATER STATION
ONE-LINE DIAGRAM

NOT TO SCALE

CITY OF COLUMBIA DEPARTMENT OF UTILITIES AND ENGINEERING DIVISION P.O. BOX 147 COLUMBIA, SOUTH CAROLINA 29217	SCALE: N.T.S. DATE: 08/17/16 REVISED: --- DRAWING NO: E3B
ONE-LINE DIAGRAM	

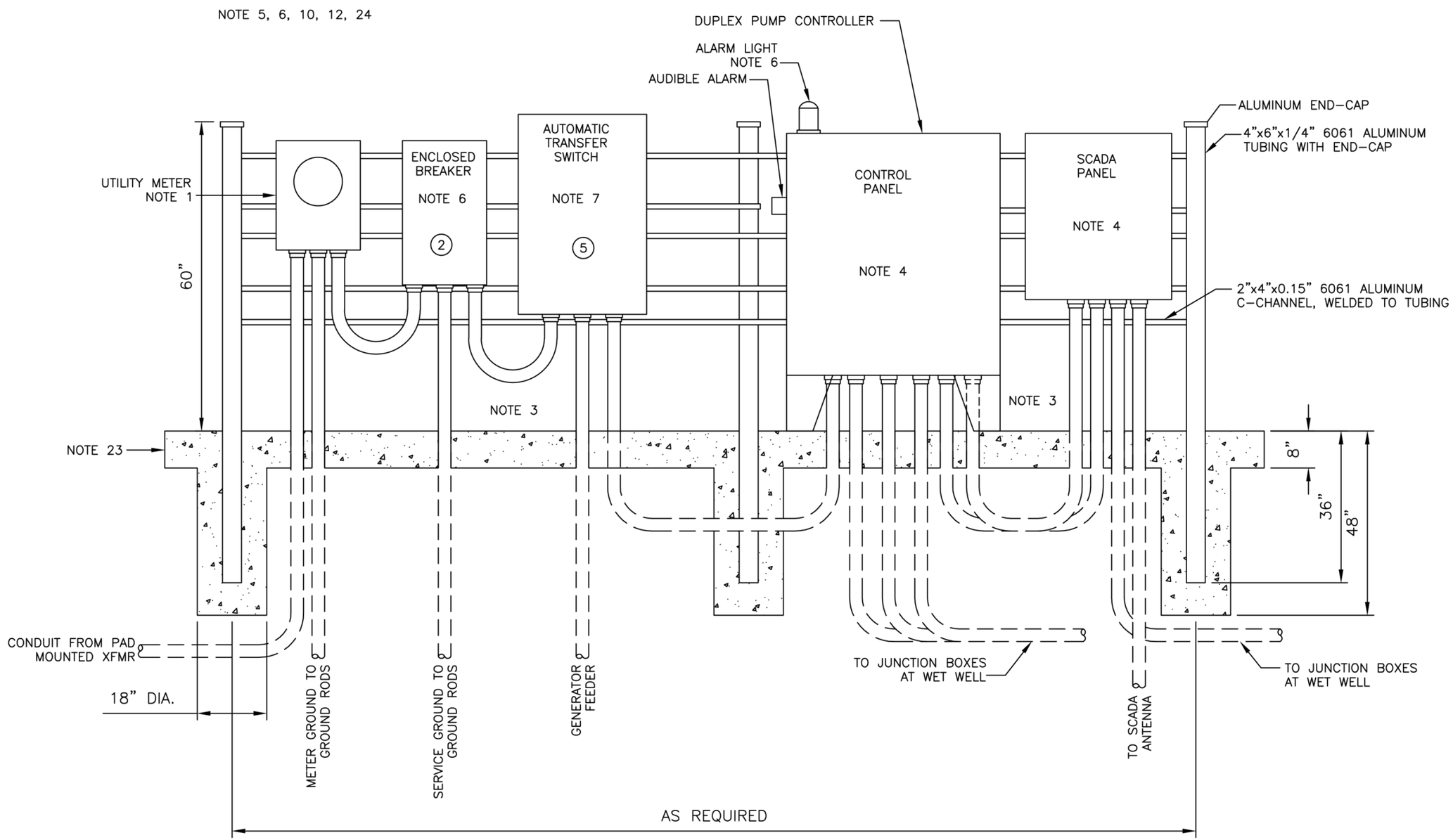

480Y/220V 3-PHASE 4-WIRE DELTA SERVICE
20HP OR GREATER STATION
PUMP STATION CONTROL PANEL ELEVATION

NOT TO SCALE

CITY OF COLUMBIA DEPARTMENT OF UTILITIES AND ENGINEERING DIVISION P.O. BOX 147 COLUMBIA, SOUTH CAROLINA 29217	SCALE: N.T.S. DATE: 08/17/16 REVISED: --- DRAWING NO: E3C
CONTROL PANEL ELEVATION	

NOTES:

1. SIZE BREAKERS, FUSES, PANEL DIMENSIONS, ETC. BASED ON ACTUAL PUMP STATION HORSEPOWER, VOLTAGE, ETC.
2. SHALL BE BUILT PER UL508A.
3. NEMA 4X 316 SS ENCLOSURE.

BILL OF MATERIALS (SEE NOTE 1)

ITEM	QUAN	DESCRIPTION	MANUFACTURER
1	1	MOUNTING PANEL CAT# A-42P36	HOFFMAN
2			
3	2	MOLDED CASE BREAKERS CAT# FAL34060	SQUARE D
4	2	GROUND BAR CAT# PK7GTA	SQUARE D
5	1	POWER DISTRIBUTION BLOCK CAT# 1323580	MARATHON
6	1	LIGHTING ARRESTER SQUARE D HWA SERIES	SQUARE D
7	1	TRANSFORMER SECONDARY MAIN CAT# QO130	SQUARE D
8	1	CONVENIENCE RECEPTACLE BREAKER CAT# QO115	SQUARE D
9	1	RTU BREAKER CAT# QO115	SQUARE D
10	1	FLOWMETER BREAKER CAT# QO115	SQUARE D
11	1	ULTRASONIC BREAKER CAT# QO115	SQUARE D
12	1	SPACE HEATER BREAKER CAT# QO110	SQUARE D
13	1	SYSTEM CONTROL POWER CIRCUIT BEAKER CAT# QO110	SQUARE D
14	1	LOAD CENTER INTERIOR CAT# QON8-16L100	SQUARE D
15	1	CONTROL POWER TRANSFORMER 120-24 CAT# 9070 T50D23	SQUARE D
16	1	480-120VAC, 3000VA CONTROL POWER TRANS. CAT# 9070 T3000D1	SQUARE D
17	46	TB1 TERMINAL BLOCKS CAT# 102010	WEIDMULLER
18	1	ANALOG SURGE ARRESTER CAT# BCP3000	BIRDCAGE
19	1	LAG PUMP START TIMER/BASE CAT# RTEP1AF20/RUZC2M	IDEC/SQUARE D
20	5	4 POLE DT 120 VAC RELAY/BASE CAT# RXM4AB2F7/RXZE2S114M	SQUARE D
21			
22	2	4 POLE DT 24 VAC RELAY/BASE CAT# RXM4AB2B7/RXZE2S114M	SQUARE D
23	2	MINICAS RELAYS/BASE CAT# 14-407129	FLYGT/SQUARE D
24	1	120VAC TO 12VDC 1 AMP POWER SUPPLY CAT# MDR-20-24	MANWELL
25	1	PHASE LOSS & UNDERVOLTAGE RELAY CAT# 460-14	SYMCOM
26	1	GFI RECEPTACLE CAT# 1595-I	P&S
27	1	FU1 3 POLE FUSE BLOCK/FUSES CAT# CHCC3D/FNQ-R-1	BUSSMANN
28	1	FU2 2 POLE FUSE BLOCK/FUSES CAT# CHCC2D/FNQ-R-15	BUSSMANN
29	1	FU3 1 POLE FUSE BLOCK/FUSE CAT# CHM1D/FNM-1	BUSSMANN
30	2	20 HP NEMA SIZE 2 STARTER CAT# 8536 SD01V02S	SQUARE D
31	2	OVERLOAD RESET CAT# 9066 RA1	SQUARE D
32	1	HEATER THERMOSTAT CAT# 7T810000	FINDER
33			
34			
35			
36	1	50 WATT SPACE HEATER CAT# AHC-50	INGRAM
37	2	ELAPSED TIME METER CAT# 711-0160	REDDINGTON
38	2	"HAND-OFF-AUTO" SELECTOR SWITCH CAT# 9001 SKS43FBH13	SQUARE D
39	2	"RUN" GREEN PILOT LIGHT CAT# APW199D-G-120V	IDEC
40	2	"HIGH TEMP" RED PILOT LIGHT CAT# APW199D-R-120V	IDEC
41	2	"SEAL FAIL" RED PILOT LIGHT CAT# APW199D-A-120V	IDEC
42			
43			
44	1	"SILENCE" PUSHBUTTON CAT# ZB4BA68/ZB4BZ101	TELEMECANIQUE
45	1	"HIGH FLOAT" AMBER, PILOT LIGHT CAT# APW199D-A-120V	IDEC
46	1	PUMP CONTROLLER CAT# MPC	DWYER
47	1	ENCLOSURE, NEMA 4X CAT# A-42H3612SSLP3PT	HOFFMAN
48	1	EXTERNAL ALARM LIGHT CAT# LRX40	INGRAM
49	1	SIDE MOUNTED NEMA 4X ALARM HORN CAT# 855P-B10LE22	ALLEN-BRADLEY
50			

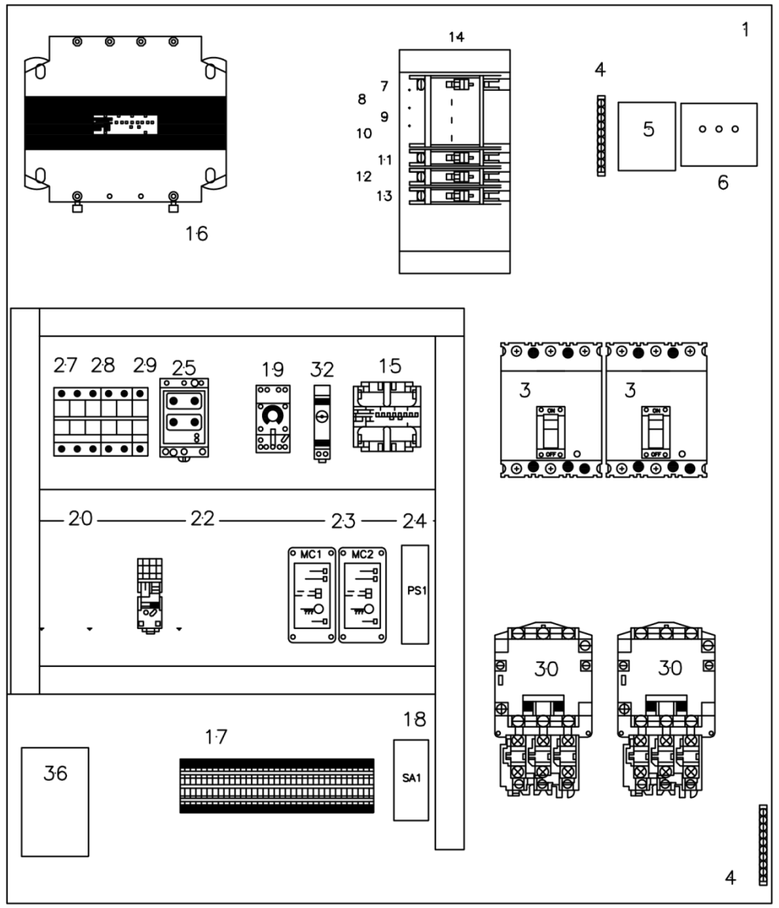

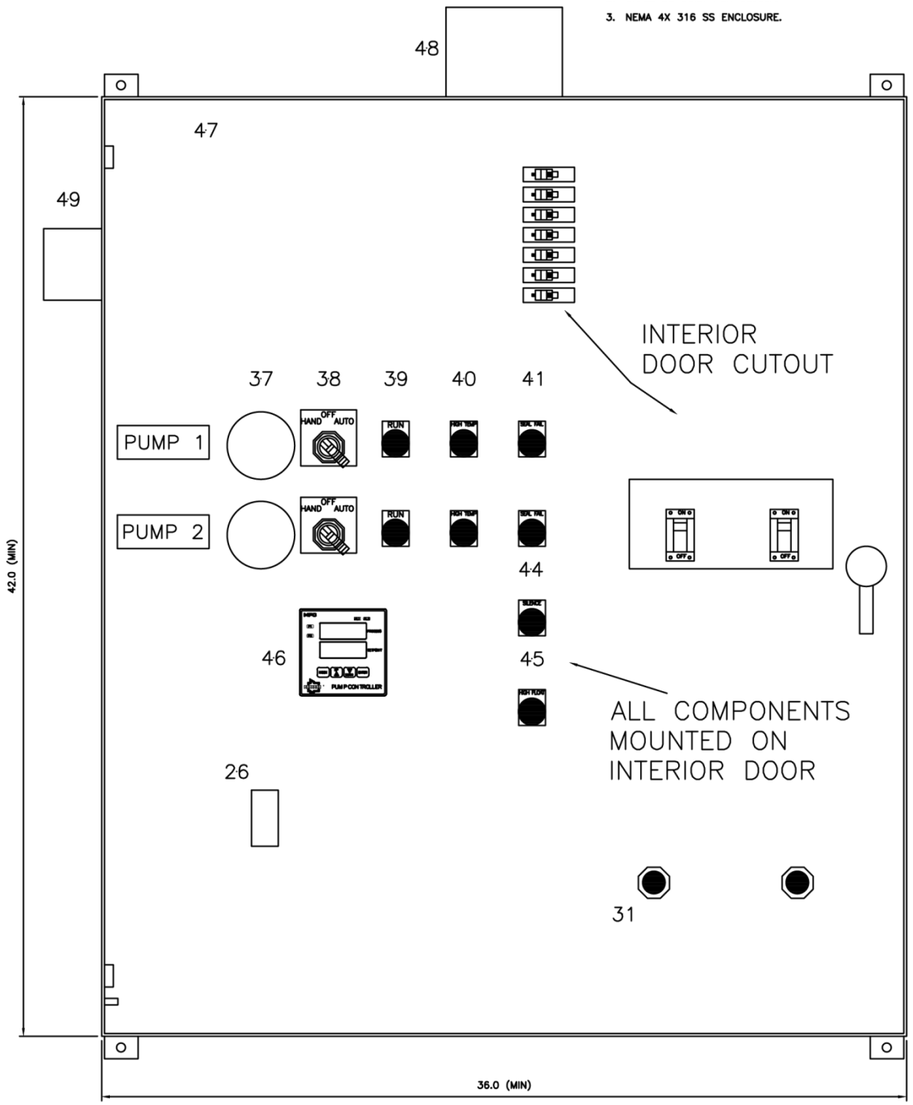

CITY OF COLUMBIA DEPARTMENT OF UTILITIES AND ENGINEERING DIVISION P.O. BOX 147 COLUMBIA, SOUTH CAROLINA 29217	SCALE: N.T.S. DATE: 08/17/16 REVISED: --- DRAWING NO: E3D
TYPICAL CONTROL PANEL LAYOUT	

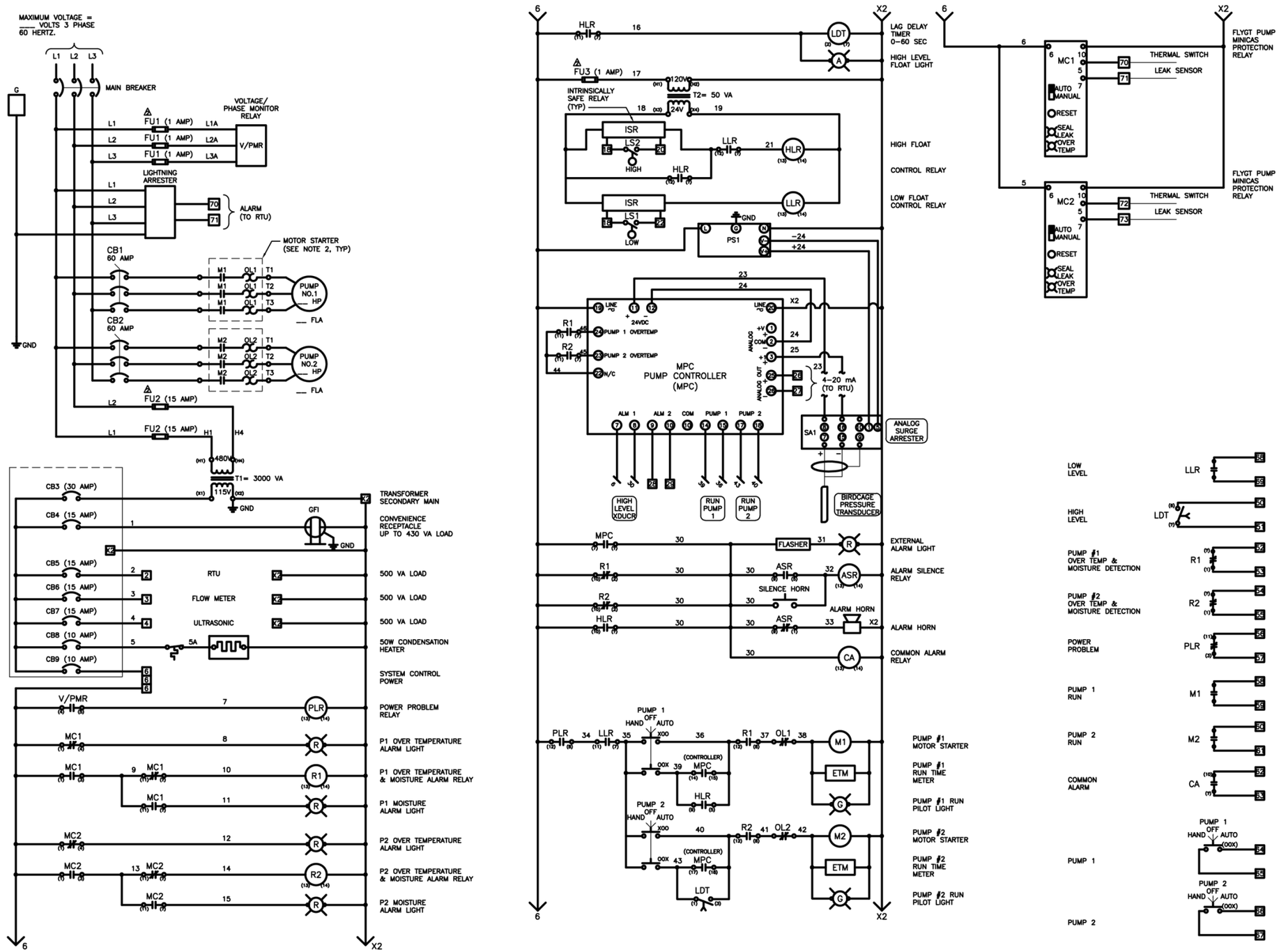

NOTES:

1. SIZE BREAKERS, FUSES, ETC. SIZES, BASED ON ACTUAL MOTOR HORSEPOWER, VOLTAGE, ETC.
2. STARTERS WITH MOTORS 20HP AND LARGER SHALL BE REDUCED VOLTAGE SOLID STATE (RVSS).

CITY OF COLUMBIA DEPARTMENT OF UTILITIES AND ENGINEERING DIVISION P.O. BOX 147 COLUMBIA, SOUTH CAROLINA 29217	SCALE: N.T.S. DATE: 08/17/16 REVISED: ___
TYPICAL CONTROL PANEL ELEMENTARY SCHEMATIC	DRAWING NO: E3E

3.3.8 Attachment A: Natural Gas Fueled Engine Driven Generator

ATTACHMENT A
NATURAL GAS FUELED ENGINE DRIVEN GENERATOR

PART 1 GENERAL

1.01 SCOPE OF WORK

A. Furnish all labor, materials and equipment and incidentals, and install one natural gas fueled engine driven standby generator unit with automatic transfer switch and appurtenances and required supporting systems in a factory type skin tight weatherproof sound attenuating enclosure as specified herein. The manufacturer or manufacturer's representative shall furnish installation technical assistance, start-up operation, field testing, operator training, first year service contract, and operation and maintenance manuals.

B. The engine driven generator shall have a stand-by power rating (site rated) of not less than ____ kVA, ____ kW, at 80 percent lagging power factor, with 480 Volt, three phase, 60 Hertz output. The alternator shall be three wire, grounded wye connected, complete with excitation system and controls.

C. Arrange the generator for automatic starting and stopping and load transfer upon failure of the normal source of power. Closed transition or parallel operation with the Electric Utility Power Company is not required. Transfer of generator power to and from connected facility electrical loads will be open transition transfer.

D. All equipment and controls specified in this Section shall be new and be considered part of the engine driven generator package. The generator manufacturer or his/her licensee shall furnish the generator package in its entirety as specified. The engine driven generator package shall be complete and shall include all equipment and controls necessary for a fully operational standby electric power supply.

E. Furnish the following for each unit:

1. Industry standard pipeline natural gas fueled, spark ignited engine with attached alternator.

2. Generator main circuit breaker.

3. Unit mounted radiator with engine driven fan, for cooling of the engine jacket water including engine mounted and engine driven circulating pump.

4. Entire exhaust system including catalyst and air fuel ratio controls if required to meet US EPA emissions regulations,

5. Engine exhaust silencer, flexible connection, exhaust pipe, hangars, pipe supports

and rain mounted inside the enclosure.

6. Fuel system piping, appurtenances and accessories installed inside of the generator outdoor enclosure, including the natural secondary fuel regulator, battery operated gas fuel inlet solenoid valve, filter, pressure gauge, and flexible connector as specified herein installed in the fuel supply piping.

7. Skid mounted factory-piping, wiring, and valves.

8. Flexible connectors and/or expansion joints for field piping connections to the generator unit.

9. Factory manufactured weather protective, sound attenuating, skintight enclosure for outdoor installation of the generator set equipment.

10. Combination engine/alternator instrument and control panel wired, tested and shock mounted at the alternator end of the unit.

11. Engine mounted electric starter with battery, battery cables, and battery charger.

12. Generator structural steel base including neoprene pad type vibration isolators.

F. Provide the services of the generator manufacturer's representative for delivery, installation technical support, set-up, start-up, testing, and training of the Owner’s personnel.

1.02 SUBMITTALS

A. Submit shop drawings and product data to establish compliance with this section, including the following:

1. Shop drawings, catalog cuts, brochures, and other materials required to completely describe the systems and equipment.

2. Assembly drawings with identification, description, and dimensions of each separately installed sub-assembly or piece of equipment and associated piping connection schematics.

3. Certificate of Compliance for Seismic Design of Non-Structural Components and Systems in accordance with ASCE 7, Section 13 and the IBC, for the generator assembly, enclosure, and accessory components attached to the generator assembly and enclosure, demonstrating that the equipment and its mounting system and anchorage have been tested or analyzed to withstand specified seismic demands.

4. Equipment base drawings indicating the size and location of bolt holes for

mounting and anchorage, and location of conduit stub-ups.

a. Details of anchorage of the equipment to the foundation including anchor bolt type, size, material, embedment depth, and minimum edge distance.

b. Summary of maximum vertical and horizontal reactions at each anchor bolt considering all applicable loads and load combinations.

5. Performance specifications of all items of equipment.

6. Description of the generator control panel showing panel layout, location, functional description, features, and options.

7. Internal electrical, instrumentation, control, and wiring diagrams.

8. Identification of all wiring connections to external systems and equipment, including numbered terminal strip identification.

9. Details of the proposed battery charger and starting battery, including cold cranking amps and ampere hour ratings.

10. Information on the proposed generator set engine jacket water treatment chemicals and generator starting battery electrolyte, including Material Safety Data Sheets.

11. The manufacturer, model, size, attenuation curve, and design back pressure for the silencing equipment as offered to accomplish the specified sound silencing for this installation.

12. Details of the main generator circuit breaker showing location, dimensions, ratings, trip curves, and enclosure details.

13. Details of the catalytic system for engine emissions control showing the manufacturer, manufacturer's experience, construction of the catalytic unit, and catalyst performance data if required to assure that the exhaust emissions of the generator unit are in accordance with the specification limitations.

14. Details of the jacket water heater and jacket water treatment.

15. Load analysis utilizing the loads as specified herein, to demonstrate that the proposed unit will start and carry the specified loads.

16. Alternator rating data sheet showing the alternator selection of frame size, output rating, efficiency, temperature rise, windings, reactances, resistances, full load current, and full load heat rejection.

17. Copy of EPA Certificate of Conformity of engine emissions in accordance with

40 CFR 1048.

18. Description of the factory manufactured, weather protected, sound attenuating enclosure including dimensions, materials and methods of construction, conformance to standards, description of all accessories and components, color charts of available colors, and enclosure circuit wiring diagrams.

19. Details of the arrangement of the exhaust piping system within the enclosure.

20. Statement certifying the maximum combined noise level from the engine exhaust and the mechanical noise from the enclosure when the generator unit is operating at full rated standby load, stated in dbA at 50 feet from the unit in any direction.

21. Manufacturer's certified shop test record of the engine driven generator unit performed in accordance with specifications.

22. Draft copy of the written service contract specified herein.

23. Draft copy of the warranty specified herein.

B. Submit responses to the following:

1. Engine Data

   a. Manufacturer

   b. Model

   c. Number and arrangement of cylinders

   d. RPM

   e. Bore x stroke (inches)

   f. Displacement (cubic inches)

   g. Maximum power at rated rpm (brake horsepower)

   h. Brake Mean Effective Pressure (BMEP) at rated kilowatt output (including any parasitic loads and alternator efficiency)(psi)

   i. Piston speed (feet per minute)

   j. Aspiration

   k. Make and model of governor

l. Make and model of overspeed shutdown device.

m. Maximum allowable engine exhaust back pressure (inches water column)

n. Engine cold cranking amperes

o. Minimum and maximum engine fuel gas supply pressure (inches water column)

2. Alternator Data

a. Manufacturer

b. Model

c. Rated kVA

d. Rated kW

e. Voltage

f. Rated Amperes

g. Power Factor

h. Temperature rise above 40 degrees C ambient

1) Stator by thermometer (degrees C)

2) Field by resistance (degrees C)

i. Class of insulation

j. Alternator efficiency including excitation losses and at 80 percent power factor

1) Full load (percent)

2) Three-quarters load (percent)

3) Half load (percent)

k. Subtransient reactance (x_d”)(per unit) or (ohms)

3. Guaranteed fuel consumption rate (at generator terminals with natural gas fuel @ 905 BTU/cubic foot low heat value)

a. Full load (cubic feet per hour)

b. Three-quarters load (cubic feet per hour)

c. Half load (cubic feet per hour)

4. Generator unit and accessories

a. Weight of skid mounted unit (pounds)

b. Overall length (inches)

c. Overall width (inches)

d. Overall height (inches)

e. Exhaust pipe size (inches)

5. Enclosure

a. Total weight of enclosure and generator (pounds)

b. Length (inches)

c. Width (inches)

d. Height (inches)

6. Exhaust gas emission data at full load at engine exhaust outlet:

a. Temperature (degrees F)

b. Flow (ACFM)

c. Carbon Monoxide (CO) (grams/BHP-hr)

d. Nitrogen Oxides (NOx) (grams/BHP-hr)

e. Non-methane, non-ethane hydrocarbons (NMNEHC) (grams/BHP-hr)

f. Exhaust oxygen (percent)

7. Exhaust gas emission data at full load at catalyst outlet:

a. Temperature (degrees F)

b. Flow (ACFM)

c. Carbon Monoxide (CO) (grams/BHP-hr)

d. Nitrogen Oxides (NOx) (grams/BHP-hr)

e. Non-methane, non-ethane hydrocarbons (NMNEHC) (grams/BHP-hr)

f. Exhaust oxygen (percent)

8. Radiator fan cooling air volume (CFM)

9. Radiator fan power (BHP)

10. Radiator fan pressure rise (inches water column)

11. Combustion air volume (CFM)

12. Full load heat rejection to enclosure by engine and alternator (BTU/min)

13. Full load heat rejection to engine coolant (BTU/min)

14. Nominal cold cranking ampere rating of the starting battery

1.03 REFERENCE STANDARDS

A. Design, manufacture, and assembly of elements of the equipment herein specified shall be in accordance with published standards of the following:

1. American Gear Manufacturers Association (AGMA)

2. American Institute of Steel Construction (AISC)

3. American Iron and Steel Institute (AISI)

4. American National Standards Institute (ANSI)

5. American Petroleum Institute (API)

6. American Society of Civil Engineers (ASCE)

7. American Society of Mechanical Engineers (ASME)

8. American Society for Testing and Materials (ASTM)

9. American Welding Society (AWS)

10. American Bearing Manufacturers Association (ABMA)

11. Factory Mutual Engineering and Research Corp. (FM)
12. Institute of Electrical and Electronics Engineers (IEEE)
13. Instrument Society of America (ISA)
14. International Building Code (IBC)
15. International Standards Organization (ISO)
16. National Electrical Code (NEC)
17. National Electrical Manufacturers Association (NEMA)
18. National Fire Protection Association (NFPA)
19. Occupational Safety and Health Administration (OSHA)
20. Society of Automotive Engineers (SAE)
21. The Society for Protective Coatings (SPC)
22. Underwriters Laboratories (UL)

B. Where reference is made to one of the above standards, the revision in effect at the time of bid opening shall apply.

1.04 QUALITY ASSURANCE

A. Build the generator from components that are coordinated and prototype tested to operate as a unit. The manufacturer shall maintain a permanent service organization and supply of spare parts in place at the time of the bid within 100 miles of the project site.

B. Design and build the unit in accordance with NFPA 110, Standard for Emergency and Standby Power Systems, Level 2, Type 60; NFPA 37, Standard for Installation and Use of Stationary Combustion Engines and Gas Turbines; and NEC 701, Legally Required Standby Systems. Build and certify the unit construction is in accordance with UL 2200, Stationary Engine Generator Assemblies.The generator set shall be manufacturer certified to be EPA certified for stationary emergency standby use, and shall comply with the requirements of US EPA CFR 40 part 1048 and 40 CFR 60, Subpart JJJJ as applicable for spark ignited engines utilized in generator set applications.

C. The load on the standby generator may include motors started on solid state starters that represent up to 90% percent of the generator’s standby rating. Coordinate design of the generator and its voltage regulation system with the supplier of the solid state

starters and other non-linear devices to assure that sufficient alternator reactance is provided to limit the line harmonics to acceptable levels as specified in IEEE Standard 519 and to assure that the voltage regulation system will provide stable operation in the presence of such harmonics.

D. The engine will be equipped with a speed control as installed on the engine shall meet ISO 8528-5 Class 1 response and stability performance specification requirements and shall provide +/- 0.25% steady state frequency variation during steady state operating conditions from no load to full load. The furnished generator set shall meet all applicable requirements of *BS5514, SAE J1349, ISO3046, and DIN6271 standards*

E. The unit shall be of such physical dimensions to fit into the space provided as indicated on the Drawings.

F. Should equipment that differs from the equipment described in this section be offered and determined to be equal to that specified such equipment shall be acceptable only on the basis that any revisions in the design and/or construction of the structure, piping, appurtenant equipment, electrical work, etc., required to accommodate such a substitution shall be made at no additional cost to the Owner and be as approved by the Engineer. Modifications required to accommodate product substitutions shall not extend the contract time.

G. Design and build the engine driven generator for standby service at all points within the specified range of operation, without overheating or excessive vibration or strain. Components shall require only that degree of maintenance as applicable to the specific type of equipment. Design and build all parts and components for interchangeability so that replacement parts may be installed without additional fitting or machining.

H. Furnish the services of a factory trained service technician, specifically trained on the type of equipment specified. Submit qualifications of the service technician for approval. The service technician shall be present on–site for a total of one man-day, exclusive of travel time, to perform equipment check-out, leveling and alignment, coordination of electrical and gas piping field connections, start-up, testing, and calibration of the unit.

1.05 service contract

A. Provide to the Owner at the time of acceptance of the unit a written [five (5)] year service contract for the engine driven generator and support systems, as furnished, commencing on the date of acceptance of the unit. Include all costs associated with the service contract in the price bid and furnish a copy of this contract to the Owner at the time of acceptance. This service contract does not supersede or replace the manufacturer’s equipment warranty as specified herein.

1. The service contract provided by the generator set manufacturer’s authorized service organization shall provide performance of the manufacturer’s

recommended preventive maintenance requirements and guidelines, and shall include quarterly equipment inspections of the generator equipment and an engine lubricating oil filter and oil change and disposal of removed engine oil on the forth visit. to assure the safe and dependable operation for the standby power system throughout the first year of operation for standby service with up to 300 hours per year of operation.

2. The preventive maintenance shall include all maintenance service at the recommended service intervals as published in the manufacturer's literature, and as required to maintain the equipment warranty in full effect. The service contract shall include as a minimum an inspection to sample and analyze lubricating oil; change lubricating oil and filters; check/replace air filters; check belts; sample and analyze coolant; check coolant level and condition, inspect ignition system; inspect governor and control system; check heaters; inspect fuel supply system, exhaust system, starting battery, battery charger, and battery charging alternator; check and adjust output voltage and frequency; and operate the unit to confirm proper operation.

1.06 WARRANTY

A. Furnish a written five year (60 months) extended warranty from the equipment manufacturer to the Owner, on all defects in material, parts, or workmanship of the generator set equipment furnished under this Section when operated as a standby unit for up to 300 hours per year. The warranty shall extend from the date of acceptance of the equipment and shall include all parts, labor, and transportation for replacing any defective components of the equipment as furnished.

1.07 SPARE PARTS ALLOWANCE

A. The generator supplier shall include in the bid price an allowance of $[____] for spare parts that are not covered under the equipment warranty, to be selected by the Owner. Submit a spare parts list that includes manufacturer's recommended spare parts, with parts prices current to the date of submittal, and information relevant to parts supply and ordering. Submit this information in time for review and approval prior to start-up and site testing of the unit.

1.08 MAINTENANCE

A. Submit operating and maintenance instructions covering all equipment furnished under this Section. Prepare the instructions specifically for this installation and include all required cuts, drawings, equipment lists, descriptions, etc., that are required to instruct operating and maintenance personnel unfamiliar with such equipment.

1.09 UNIT PERFORMANCE

A. Select the engine driven generator to be adequate to start one [__]HP, three phase,

Code Letter [__], pump motor using a [full voltage] [solid state reduced in-rush] starter, along with [__] kVA of single phase miscellaneous load at 0.9 power factor; and with a transient voltage dip not to exceed thirty percent of rated voltage.

B. The unit rating shall not be less than [__] kW. Provide an oversized alternator or enhanced voltage regulator as required for motor starting and to carry non-linear loads. The specified unit site rating is the minimum acceptable for the specified loads, and shall be increased if required to meet the load starting or running requirements as specified herein.

C. The engine driven generator set and all of its components shall provide stable operation under all operating conditions that the station load may impose.

D. Under steady load conditions, from zero load to full-rated load, voltage regulation shall be within plus or minus one percent, and frequency regulation shall be within plus or minus 0.25 percent (0.15 Hertz).

E. Upon application or removal of 75 % rated resistive load in one step, the transient voltage dip or overshoot shall not exceed 25 percent of rated voltage and recovery to steady state operation shall be within ten seconds.

1.10 DELIVERY, STORAGE AND HANDLING

A. All mechanical and electrical equipment shall be coated, wrapped and otherwise protected from snow, rain, drippings of any sort, dust, dirt, mud, flood and condensed water vapor during shipment and while installed in place during construction. The protective coverings shall remain in place until the work areas are substantially free of all construction dust and debris.

B. Package and crate the unit for shipment and provide treatment for long periods of storage.

1.11 PROJECT/SITE REQUIREMENTS

A. House the complete engine driven generator unit in a factory type skin tight weather protective sound attenuating enclosure for outdoor installation. Arrange the unit for automatic unattended operation and for positive and successful quick starting within an outdoor ambient temperature down to minus 20 deg. C. Design all equipment housed within the generator enclosure for a maximum operating temperature based upon a maximum ambient temperature of 40 deg. C plus the temperature rise that will occur within the enclosure either during generator operation or with maximum solar heating when the generator is not in operation. Factory assemble the generator unit with the outdoor enclosure, mounting frame, and accessories as specified herein, ready for installation on a concrete foundation with available connection for electric and gas supply pipe. The unit shall not require field assembly.

B. The engine driven generator unit within its enclosure, in combination with the engine exhaust silencer, with the generator in operation at full load, shall have an average overall sound pressure level of not more than 70 dB(A), reference 21 micro-newtons per square meter, measured at a distance of 50 feet from the enclosure in any horizontal direction at an elevation of 5 feet above ground level, measured in accordance with NEMA standards.. There shall be no pure tone. It shall be the responsibility of the engine driven generator unit manufacturer to choose the engine exhaust silencer and the sound attenuating properties of the enclosure to meet these criteria.

C. The altitude at the project site will not be in excess of 1000 feet above sea level.

D. The heat sink for rejection of heat from the engine jacket shall be a unit mounted closed loop radiator utilizing an engine mounted and engine driven fan to discharge air through the radiator core and through a generator room wall mounted radiator discharge air louver to outdoors. Design the radiator and engine fan to dissipate all required heat loads with the generator running at full rated output and with 40 deg. C ambient outdoor air. No other source of cooling as available or will be permitted.

E. Certify engine exhaust emissions in compliance with EPA Designation Emissions Standard under the provisions of 40 CFR 1048, control of Emissions for New, Large Non-road Spark-Ignition Engines, 40 CFR 60.4231, 40 CFR 90.103, and 40 CFR 60, Subpart JJJJ and current amendments as they apply to non-road stationary spark ignited emergency engines. Design the engine and fuel control system to limit the exhaust emissions of the engine to the limits imposed by these regulations.

F. Design and build all non-building structures and provide seismic restraint of nonstructural components to withstand seismic demands to provide post seismic event functionality in accordance with ASCE 7, Section 13 and the IBC.

G. Design the enclosure base and attachment to the concrete foundation to support the gravity loads, dynamic loads, wind loads and seismic forces to conform to ASCE 7, Section 13 and the IBC. Furnish and install anchorage in accordance with the manufacturer’s requirements, sized and quantity as determined by the anchorage calculations required in this Section.

H. Enclosure exterior length and width dimensions shall fit in the space available on site.

PART 2 PRODUCTS

2.01 GENERAL

A. The spark ignited engine driven generator set shall be a factory assembled unit and shall be as manufactured by Caterpillar/Olympian. Units offered at a kilowatt rating in excess of their published rating are not acceptable.

B. The generator shall be rigid, neat in appearance and shall allow easy access to the various parts for maintenance purposes. Enclose all parts to prevent the throwing or dripping of oil.

C. The generator shall be pre-piped and pre-wired to the greatest extent possible. Provide separate pre-wired terminal boxes on the generator skid for AC and DC wiring. All wiring terminations for connection to field wiring shall be within terminal boxes utilizing numbered terminal strips.

D. Mount the close coupled engine and alternator assembly on a rigid, welded, fabricated steel base, sized to maintain the correct alignment of all system components. Fabricate the base of steel I-beam, channel, or box section, braced and reinforced as required to maintain alignment between the engine and the alternator. Mount the engine-alternator assembly on the base utilizing rubber pad type vibration isolators and felt washers. Mount the engine radiator and battery support separately on the base, independent of the engine-alternator assembly. The complete generator unit shall be free from harmful torsional or excessive vibration during all ranges of generator set operation, from no load to full load. Shop prime and finish paint all exposed surfaces of the structural steel members of the fabricated base frame in accordance with the manufacturer's standard practice.

2.02 ENGINE

A. The spark ignited engine shall be water cooled, four stroke cycle, naturally aspirated or turbo-charged, with controlled ignition gas regulation, variable timing control, and calibrated carburetion system, manufacturer specifically designed and equipped for operation on natural gas fuel (905 BTU/cu ft low heat value). Provide a carburetor calibrated to the fuel supply, secondary gas pressure regulator sized and set for the gas flow and pressure requirement of the engine, and electronic solid state spark ignition system. The engine shall develop sufficient power output rating for the alternator output, alternator efficiency, radiator fan power, and other miscellaneous parasitic loads.

B. The engine shall have a digital ignition system with an automatic fuel carburetor. The timing system shall include an electronic magneto. The engine shall be equipped with a secondary gas pressure regulator to accept an industry standard pipeline natural gas fuel supply of between 10 – 15 inches of H2O pressure and volume of gas required for continuous full load generator set operation. Furnish an engine installed gas solenoid valve which shall be activated by the generator set controls to be automatically energized to open anytime the generator set is cranking and running and shall automatically close anytime the generator is shutdown for any reason, either normally or in safety or emergency shutdown conditions. The valve is to be controlled and operated by the generator's DC battery control voltage and generator set operational controls.

C. Intake and exhaust valves shall be heat-resisting alloy steel with high tungsten-chrome

alloy steel exhaust valve seat inserts.

D. An engine driven gear type lube oil pump complete with a replaceable element full flow oil filter shall provide full pressure, full flow lubrication to all engine components. Furnish an installed oil drain line valve inside the enclosure and piped to the outside of the enclosure for easy access when draining the engine oil. Provide a crankcase breather in accordance with emissions limitations as specified in this Section.

E. Provide dry type combustion air intake filter(s) to protect working parts of the engine from dirt and grit. Filters shall have replaceable elements and shall be equipped with service indicators.

F. Provide a 12 or 24 VDC generator set battery ignition system, including engine starting motor and solenoid, distributor/ignition coil, radio suppression and an automatic battery charging alternator with transistorized voltage regulator.

G. Design the engine and fuel control system, in conjunction with use of an oxidation catalyst after treatment, to limit the exhaust emissions of the engine as required per current EPA standards.

2.03 SYSTEMS

A. Governor

1. The governor actuator shall be electronic type, DC motor driven, capable of maintaining isochronous regulation from no load to full rated load within 0.25 percent of rated frequency.

2. The governor controller shall be all electric, mounted in the generator control panel. The governor controller shall have the capability for manual adjustment of speed setting, speed droop, and load limit. Speed droop shall be adjustable from zero to five percent from no load to full load. The governor controller shall not cause electromagnetic interference.

3. The governor actuator and the governor controller shall be as manufactured by Woodward Governor Co., Barber Coleman, or equal, and shall operate on the direct current voltage from the engine starting battery.

4. Furnish a separate overspeed shutdown device that shall instantly stop the engine in case of preset overspeed or the operation of various protective devices as later specified.

B. Fuel System

1. The spark ignited engine will be connected to a utility furnished industry pipeline

natural gas service complete with meter and primary regulator located outside the enclosure. Natural gas supplied to the engine will have a low heat value of 905 BTU per standard cubic foot, and will be at a minimum pressure of ten to fourteen inches of water column at the maximum gas flow rate required by the generator set during all ranges of operation. CONTRACTOR shall confirm with the Utility gas company that the appropriate natural gas volume and pressure is to be supplied and available for consumption use by the generator set engine during all ranges of generator set operation, from no load to full load, and at all times.

2. The gas supply piping inside the enclosure shall include an appropriately sized diameter gas pressure gauge with a scale of 0 to 30 inches of water column complete with petcock, one electric (DC) solenoid operated natural gas fuel shut-off valve, one wye-type dry fuel strainer, and one flexible connector to the engine fuel supply connection. Provide a vent to outdoors from the secondary regulator if required by the regulator design. Furnish all fuel piping completely piped inside the enclosure, ready for single point connection of field piping external to the enclosure. Interior piping shall be black steel and of a size recommended by the engine manufacturer.

3. For an engine requiring n exhaust a catalyst system to conform to the specified exhaust emissions limitations, provide an air-to-fuel ratio controller on the engine fuel system to maintain the correct air to fuel ratio for operation of the exhaust catalytic system.

4. All parts of the fuel system shall be installed in full compliance with OSHA Standard 1910.106 and shall meet the approval of, and be installed in complete compliance with, all applicable local, State and Federal codes, laws and regulations.

5. Generators shall be capable of starting and operating at temperatures below freezing. Fuel system shall be capable of satisfactory operation at a minimum of 20-degrees Fahrenheit below freezing (12-degrees F). Generator fuel system shall be heated as required for low temperature operations.

C. Radiator Cooling System

1. The engine shall be radiator cooled with a blower or pusher type fan mechanically driven by the engine. The engine driven radiator fan and generator enclosure intake and discharge louvers shall provide a static pressure restriction of less than 0.5 inches of water in addition to the losses through the radiator, to move the required air flow through the intake louver and discharge plenum and louver to provide the cooling required by the unit. The radiator shall incorporate flanges for attachment of a flexible duct connection to the exhaust plenum. Provide guards for fan, belts, and hot surfaces in accordance with OSHA regulations and UL 2200. The cooling system shall be adequate for cooling the engine at full rated load with an outdoor ambient temperature of 40 degrees C plus the temperature

rise corresponding to the heat given off by the alternator and equipment hot surfaces. Provide a coolant low level switch in the radiator top tank, wired to the low coolant alarm on the generator control panel.

2. Furnish an engine driven, centrifugal coolant pump equipped with a mechanical seal to circulate the coolant through the engine and radiator. Provide an automatic temperature regulator for the engine coolant that will maintain pre-set temperature without restricting the rates of flow of coolant through the engine.

3. Coolant shall be for use in ambient temperatures which may range from -20 to 40 degrees C, and shall be a 50 percent ethylene glycol antifreeze solution conforming to ASTM D-4985 and D-5345. The coolant shall be premixed extended life type and shall contain additives as recommended by the engine manufacturer for the prevention of both scale formation and corrosion in the engine water jackets and cooling system components that are in contact with the engine coolant. Coolant with additives shall be as manufactured by the NALCO Chemical Company, Dow Chemical, Aqua Laboratory, or approved equal.

4. Provide an engine mounted thermostatically controlled heater for the engine coolant system to maintain not less than 32 degrees C in the engine jacket to assure quick start and load transfer with an ambient temperature of -20 degrees C. The heater shall include valves or quick disconnects to allow isolation and removal of the heater without draining the engine cooling system. The heater shall have a minimum rating of 1000 watts when operated on a 120 Volt AC single phase power supply. Provide a grounded plug to connect to a 120 Volt AC receptacle.

5. Provide a valved drain on the cooling system piped to the exterior of the enclosure. Provide flexible connectors at all connections of off-skid piping to the engine.

D. Electric (Battery) Starting System

1. Provide an engine mounted, 12 or 24 Volt DC solenoid shift electric starter with solenoid capable of withstanding six (6) consecutive cranking periods of fifteen seconds cranking each separated by fifteen seconds of rest.

2. The starting battery shall be low maintenance, long life, lead acid type, especially designed for spark ignited engine cranking service. Battery shall be of a capacity as recommended by the battery manufacturer for the necessary break-away current, cold cranking amperes, and ampere hour capacity for six consecutive cranking periods of fifteen seconds each, or for ninety seconds of continuous cranking without being recharged and with a battery temperature of ten degrees C and with the engine jacket maintained at 30 degrees C. The battery shall be manufactured by Delco, Exide, Caterpilla,or equal.

3. Furnish a skid mounted battery box specifically designed for battery service. Furnish full insulated battery covers. Furnish and install battery cables with terminals and connections for connecting the battery to the electric starter. Furnish all connectors and hardware, cables, grease, and lifting device.

4. Furnish an automatic battery charger for charging the starting battery. The charger shall be UL listed, solid state, electronic, fully automatic, float/equalize-type. The battery charger shall have automatic voltage sensing determined by the state of the battery and reducing to milliamp current on fully charged battery. Charger shall be for 120 volt AC, single phase, 60 Hertz alternating current input. Provide conduit and wire for the charger to a junction box installed inside of the enclosure for field wiring service power connection by the CONTRACTOR. The charger shall be not less than five (5) Amperes D.C. output capacity. Arrange the charger for wall mounting inside the generator enclosure. The battery charger shall provide control power to the generator control panel when the generator is not running with correct voltage and current output to provide proper battery charge rate for maximum battery life and control panel power requirements.

5. Provide an automatic thermostatically controlled battery pad heater rated 120 Volt, single phase power supply to maintain the battery temperature at a minimum of 10 degrees C when the ambient temperature is -20 degrees C. The heater shall automatically shut off when the battery temperature attains 30 degrees C. Provide a grounded plug to connect to a 120 Volt AC receptacle located inside of the enclosure.

E. Exhaust System

1. Furnish an exhaust silencer as manufactured by GT Exhaust, Silex innovations, Donaldson; Nelson, or equal, of aluminized steel construction, mounted and piped inside the enclosure. The silencer shall have not less than a critical rating and in combination with the catalyst, if used, shall attenuate the sum of the octave band levels converted to A-weighted sound pressure levels such that the noise level from the engine exhaust plus mechanical noise from the enclosure will conform to the noise limitation specified herein. There shall be no puretone. Size the silencer to operate within the maximum allowable backpressure of the engine, when installed in the exhaust piping system as furnished.

2. Furnish a three-way, non-selective catalytic reduction unit for stoichiometric spark ignited engines, if required to meet the emissions requirements specified herein. The catalyst shall be a separate unit or shall be permanently built into the silencer housing. The catalyst housing shall be of stainless steel to provide the corrosion resistance required to allow the housing to be insulated to control heat rejection from the surface of the housing. The housing shall include 1/2 inch pipe taps before and after the catalytic element to allow monitoring of the exhaust gas flow upstream and downstream of the catalytic element.

3. Connect the exhaust silencer to the engine with a stainless steel bellows type exhaust expansion joint. The expansion joint shall be as recommended by the engine manufacturer for the maximum operating temperature of the exhaust, engine vibration, and for expansion of the exhaust system caused by a 650 deg. C temperature change. The expansion joint shall adapt to the engine exhaust outlet connection, and shall provide a flanged or threaded connection to the exhaust silencer.

4. Exhaust pipe shall be light wall exhaust tube as manufactured by GT Exhaust Systems, of Type 304 stainless steel, with clamp type joints. Exhaust pipe shall be of the size recommended by the engine manufacturer. All exhaust line elbows shall be long radius.

5. The exhaust pipe roof penetration shall be with an insulated Type 321 stainless steel or aluminum thimble designed to accommodate the specified exhaust pipe and allow a minimum 1-in air gap between the thimble and the pipe. There shall be no heat conduction path between the exhaust pipe and the roof. The roof thimble shall project above the finished roof and shall include Type 321 stainless steel or aluminum exterior rain flashing and insulation as required to protect the enclosure. Roof thimble shall be as manufactured by GT Exhaust Systems or equal. All portions of the exhaust system above the rain collar and exposed to the weather shall be of aluminum or Type 321 stainless steel construction. The open space between the exhaust pipe and the roof thimble shall allow for ventilation and shall include screening or mesh to prevent the entrance of insects.

6. Terminate the exhaust pipe vertically with a Type 321 stainless steel counterbalanced raincap with bronze bushings. The raincap shall be weighted such that the cap will open completely out of the exhaust air flow, causing no obstruction or deflection when the engine is running at rated speed without load.

7. Cover the interior exhaust system with insulation to limit the interior temperature rise of the enclosure and shield heat sensitive components from the exhaust pipe heat, and provide operator protection in accordance with UL 2200 during generator operation. The insulation shall not contain asbestos or asbestos bearing products. Furnish and install all required steel support framing and hanger bands for supporting the silencer from the interior of the enclosure.

8. The entire installation shall meet with the Engineer's approval. It is the intent of this specification to provide complete compliance with all applicable local, State and Federal codes, laws and regulations.

2.04 ENGINE INSTRUMENTATION AND CONTROLS

A. The engine driven generator shall include a combination engine/alternator control panel, shock mounted in a unit-mounted NEMA 1 enclosure located at the alternator end of the unit, and oriented to be easily viewed through the open weatherproof

enclosure doors. The control panel shall be all electronic type with two line alpha-numeric digital displays visible in any lighting condition. Panel construction shall conform to UL 508 for industrial control panels. Provide all interconnecting wiring between the engine/alternator set and the control panel. Direct communication with the control panel shall be with an environmentally sealed membrane keypad. The control system shall be PLC based. Furnish all software, instructions, and interconnecting cables required for PC communication with the control panel for adjustment and diagnostics.

1. Information displayed on the face of the panel shall include, but not be limited to, the following indications:

    a. Lubricating oil pressure

    b. Coolant temperature

    c. AC volts, 0.5 percent accuracy

    d. AC Amperes, 0.5 percent accuracy

    e. Frequency meter, 0.5 percent accuracy

    f. Output power (kW and kVA) (total and per phase)

    g. Power factor

    h. Non-resetting elapsed time meter calibrated in hours and tenths of hours

    i. DC volts

    j. Tachometer

    k. Diagnostics for servicing

    l. Emergency shutdown condition indication lamps for each shutdown condition with logic to maintain lockout condition and fault light until reset.

2. Operators on the panel shall include:

    a. RUN-OFF-AUTO selector switch

    b. Emergency stop mushroom type push button.

    c. Voltage control

    d. Alarm test/reset pushbuttons.

e. Phase selector switch

3. The panel shall also include:

a. Necessary fuses

b. Alternator voltage regulator

c. Engine control module.

d. Governor controller.

B. The control panel shall include a complete automatic engine start control that operates in response to closing a remote contact and stop control that operates in response to opening the remote contact.

1. The engine control module shall provide automatic cyclic cranking for at least four 15 second cranking periods separated by 15 second rest periods. If the engine fails to start after the last cranking cycle, the cranking limiter shall terminate further cranking and activate the overcrank alarm. The cranking limiter shall automatically disengage the starter when the engine fires and accelerates to operating speed.

2. The generator controls shall include a three-position switch with the following positions: RUN-OFF-AUTO. In RUN, the engine shall start and run with load transfer controlled from a remote location; in OFF, the engine shall stop and shall not start; in AUTO, the engine shall start, run and stop from a remote two-wire

signal from the automatic transfer switch furnished. Load transfer shall occur when the unit attains rated voltage and frequency.

3. The generator controls shall include an automatic cool-down timer, to allow the engine to continue to operate after load transfer back to the normal power supply, to cool down prior to automatic shut-down. The timer shall be adjustable from zero to ten minutes and shall be engaged when the selector switch is in the AUTO position.

4. Should any of the protective sensors on the generator activate, the engine control shall immediately shut down the engine.

C. Control panel face shall include an installed emergency stop pushbutton. Arrange the controls to accept operation of a remote contact to provide for remote emergency stop. Emergency stop shall over-ride all other controls to immediately shut off the fuel supply and shutdown /stop the generator set concurrently with tripping open the generator circuit breaker.

D. Furnish a remote emergency stop switch mounted on the exterior of the generator enclosure in an easily accessible location as determined by the OWNER. The remote emergency stop switch shall be mushroom head type, housed in a NEMA 4X wall mount enclosure, permanently labeled as “Generator Emergency Stop”.

E. Provide automatic shutdowns with fault light alarm indicators for each of the following conditions:

1. High coolant temperature
2. Low coolant level
3. Low lubricating oil pressure
4. Engine overspeed
5. Engine overcrank
6. Over voltage
7. Low natural gas supply (Gas pressure sensing switch provided by Contractor and wired to generator controls)
8. Emergency Stop

F. The controls shall include automatic pre-alarms for the following conditions with fault lights for each:

1. Low coolant temperature
2. Approach high coolant temperature
3. Approach low lube oil pressure
4. Switch not in AUTO position
5. Low battery voltage
6. Generator breaker tripped
7. Battery charger alarm

G. The control panel shall include an audible alarm horn to signal any of the alarm shut down or pre-alarm conditions. Alarms shall not reset and the alarm horn shall not shut off until manually acknowledged, and fault lights shall not reset until the fault is resolved. Provide lamp test pushbutton and alarm acknowledge pushbutton.

H. Arrange the control panel to accept remote dry contact closure for generator circuit breaker tripped alarm and battery charger failure alarm and remote emergency stop, and low natural gas supply; display the alarm condition as an individual labeled alarm on the alarm panel; and include the alarm condition in the remote common pre-alarm output.

I. The controls shall include one normally open and one normally closed electrical relay dry contact rated 10 amperes at 120 volts A.C., for operation of a remote alarm on activation of any one or more of the pre-alarm conditions listed above, and shall include one normally open and one normally closed electrical relay dry contact, rated 10 amperes at 120 volts A.C., for operation of a remote alarm on activation of any one or more of the shut-down conditions listed above.

J. The control panel shall include three sets of normally open/normally closed dry contacts, rated 10 amperes at 120 volts A.C. that shall activate upon engine run.

K. Arrange the generator control panel for the following field wiring connections. Provide numbered terminal strip connections for each.

1. Remote start/stop - dry contact closure input from the automatic transfer switch - battery voltage pair

2. Remote emergency stop - dry contact open input from the remote emergency stop station – battery voltage pair.

3. Generator breaker open - dry contact closure input from the generator main breaker –battery voltage pair.

4. Engine run - three dry contact open/close output from the generator control panel for remote connection – 120 Volt pairs

5. Generator shut-down alarm – dry contact open/close output from the generator control panel for remote connection – 120 Volt pair

6. Generator trouble alarm – dry contact open/close output from the generator control panel for remote connection – 120 Volt pair.

7. Battery charger fault – dry contact closure input from the battery charger – battery voltage pair.

8. Natural gas supply fault – dry contact closure input from CONTRACTOR furnished gas supply sensing switch- battery voltage pair

9. Generator control switch in remote – dry contact closed when Auto/Manual switch is in the Remote position

2.05 ALTERNATOR AND EXCITATION SYSTEM

A. The alternator shall be of the open drip-proof bracket type, especially designed for connection to the engine and shall be for the power output characteristics as described herein, designed to start and operate the specified loads. The alternator shall have Class H insulation with a temperature rise in accordance with NEMA MGI-22.40 under full rated load operation, but in no case shall exceed 125 Deg. C rise. The alternator shall have Amortisseur windings.

B. The alternator shall be as manufactured by Caterpillar/Olympian. It shall have a forged or cast alloy steel flanged shaft for direct connection through a flywheel type coupling or adapter and disc coupling to the engine, and shall be of the single bearing type with anti-friction bearing.

C. Brace the alternator windings to withstand any possible short circuit stresses. The windings shall withstand overheating or stresses caused by harmonics generated by pulse width modulated variable frequency drives and solid state starters. The alternator shall be "Radio Interference Proof" (RIP) and the "Telephone Influence Factor" (TIF) shall be within the limits of Section 9, ANSI C50.12.

D. The alternator shall be brushless with a rotating permanent magnet generator type excitation system with Class H insulation.

E. The alternator shall include a complete voltage regulating system that shall hold the alternator voltage output within the limits specified herein. The voltage regulator shall be solid state digital (Volts/Hz) with RFI filters and associated controls. The voltage regulator shall provide regulation within 0.25 percent no load to full load, with temperature drift of not more than 0.5 percent. The regulator shall maintain precise control of the alternator output with up to 20 percent harmonic distortion in the output voltage. Provide means in the control panel for a minimum of plus or minus five percent manual voltage adjustment while the unit is running.

F. The alternator stator core shall be 2/3 pitch. Stator, rotor, and exciter insulation shall all be NEMA Class H insulation system as defined by NEMA MG1-1.65. The alternator insulation must be certified under UL 1446 Standard. Stator copper windings shall be random or form wound construction. Provide 100% epoxy varnish impregnation and a coat of epoxy asphalt insulating material to increase resistance to abrasive dust or sand, high humidity, and light acidic, oil, or salt-laden atmospheres, as well as to prevent fungus growth. Enclosure shall be drip-proof guarded and shall include rodent screens.

G. Alternator rotor poles shall be of individually insulated steel punchings. Poles shall be vacuum impregnated with fungus resistant thermosetting synthetic varnish and baked for maximum moisture resistance, high dielectric strength and high bonding qualities. Braze cage connections for strong construction and permanent electrical

characteristics.

H. Provide a directional blower on the alternator shaft to draw cooling air from the exciter end, over the rotor poles and through louvered openings in the drive end.

I. The alternator shall have a permanently lubricated anti-friction bearing. The designed bearing life, based on the B-10 curve of the American Bearing Manufacturers Association, shall be not less than 40,000 hours.

J. Provide an automatically controlled generator anti-condensation space heater rated 120 Volt AC, single phase power supply to maintain not less than 32 degrees C temperature within the alternator enclosure with an outdoor ambient temperature of minus 23 degrees C to prevent the accumulation of condensation within the alternator enclosure under outdoor ambient conditions. Provide conduit and wire for the jacket water heater to a junction box installed inside of the enclosure for field wiring service power connection by the CONTRACTOR

K. The alternator shall include a NEMA I terminal box, sized to NEC clearances, and located to provide convenient arrangement inside the enclosure for access to the circuit breaker and wiring terminations. Provide potential transformers and current transformers in the terminal box for on board monitoring of generator output voltage and current.

L. At any balanced load between 75 and 100 percent rated output, the difference in line-to-neutral voltage among the three phases shall not exceed one percent of the average line-to-neutral voltage. Under an unbalanced load, consisting of 25 percent load at 1.0 power factor placed between any phase and neutral and zero load on each of the other two phases, the maximum simultaneous difference in voltage between the three line-to-neutral phases shall not exceed three percent of rated line to neutral voltage.

2.06 GENERATOR MAIN CIRCUIT BREAKER

A. Furnish one, three pole, circuit breaker for three phase overloads and/or short-circuit protection. Current ratings shall be as required to protect the generator unit from overload or short circuit and shall be as shown on the Electrical Drawings. The circuit breaker shall operate automatically during overload and short-circuit conditions. Circuit breaker shall be UL listed and rated per NEC requirements to carry the full ampere load of the generator. The circuit breaker shall include auxiliary contacts wired to the generator control panel to provide alarm if the breaker is in the “Tripped” position. The short circuit rating of the generator circuit breaker shall be not less than 35,000 Amps RMS symmetrical.

1. Provide a generator mounted UL/CSA Listed main line AC circuit breaker, solid state trip, 3 pole molded case, NEMA 1/IP22 for the purpose of providing an AC electrical load circuit interrupting and protection device for the generator. The circuit breaker shall have an LS or LI adjustable electronic trip with current

sensors that shall monitor each phase for each pole of the circuit breaker. Generator exciter field circuit breakers do not meet this requirement and are not acceptable. The breaker shall be furnished with a shunt trip to be connected to engine/generator safety shutdowns for safety trip opening of the circuit breaker with the occurrence of any generator set safety or emergency shutdown. Breaker shall be housed in an extension terminal box which is isolated from vibrations induced by the generator set. Mechanical type lugs, sized for the circuit breaker feeders shown on Drawings, shall be supplied on the load side of breaker.

2.07 SOUND ATTENUATED WEATHERPROOF HOUSING

A. Enclose the skid mounted generator unit, battery, battery charger, and exhaust silencer in a factory manufactured sound attenuated weather protected skin tight enclosure designed to meet the conditions set forth below. The enclosure shall comply with the National Electrical Code (NEC), and the National Fire Protection Association (NFPA) for clearance around electrical equipment as specified. The enclosure shall conform to the following design criteria:

1. Rigidity wind test equal to 115 mph

2. Roof load equal to 50 lbs per sq. ft.

3. Rain test equal to 4-in per hour

4. The enclosure shall bear a label certifying compliance with UL 2200.

B. The enclosure shall have an interior width as required to provide minimum clearances on the sides and end of the generator set. The enclosure shall provide for continuous, unobstructed access on the two sides of the generator. The dimensions of the enclosure shall be such as to provide space for and NEC clearances for the generator set, the generator circuit breaker, and the generator control panel.

C. The enclosure shall be of lift-off design, consisting of a roof, walls, louvers, and hoods/baffles of frameless panel construction epoxy powder coated steel sheet minimum thickness of 0.080-in. All fasteners shall be concealed stainless steel self-tapping screws. Camber the roof to aid in rain run-off. Provide insulation in the walls and roof as required to meet the specified noise limitation criteria specified herein. Color shall be manufacturer’s standard. Submit available color options.

D. The base and underframe shall consist of two wide flange “I” beam or channel longitudinal skids, with fabricated steel cross members. Overlay cross members with 1/8-in thick steel plate welded to the cross members to provide a solid floor. A 3/4 inch pressure treated wood subfloor may be used between the cross members and the steel deck to provide further sound attenuation and for acoustic isolation of the generator and base assembly. Provide mounting to attach the lift-off enclosure to the base. Provide steel tapping plates coordinated with the generator set manufacturer, for

anchoring the equipment within the enclosure. Provide floor openings for electric conduit stub-up where required for conduit wiring access to the equipment within the enclosure. The floor shall incorporate a diked perimeter to form a containment area for spilled fluids such as coolant and lubricating oil. The diked volume shall be at least 150 percent of the greatest fluid volume contained within the engine. The dike shall have steel edges welded and/or caulked to the floor. The conduit stub-up and any other floor penetrations shall be diked. The diked area may form the containment within itself, or it may slope and drain to a storage volume. All portions of the diked area shall be accessible for cleaning without removing covers or floor plates.

E. Provide four-point lifting lugs at or near the corners of the enclosure base, with capacity for rigging the entire assembly. Provide two electrical grounding lugs mounted on the base for connection of the grounding system.

F. Provide access doors on each side of the enclosure of sufficient quantity and opening to provide full access to each side of the generator set for maintenance and NEC required access and clearances to the generator circuit breaker. Doors shall consist of a steel frame with skin material matching the enclosure. Doors shall be fully gasketed to form a weather tight perimeter seal and include interior insulation the same as the wall insulation. Hinges shall be forged aluminum or stainless steel with stainless steel pins. Door handles/latches shall be of stainless steel, shall firmly latch the door closed, and shall incorporate means to apply a padlock. Doors shall provide a full 180 degree swing to provide unobstructed access to the enclosure interior when open. Provide a stainless steel hold-open latch on each door.

G. Air handling during operation of the generator set shall be as follows: Air shall enter the enclosure through a louver, flow past the alternator and engine, pass through the radiator fan and radiator, and discharge through a louver. The system shall not exceed 0.5 inch w.g. total external static pressure to ensure adequate airflow for cooling and combustion. Louvers shall be of formed and extruded steel and shall be screened with stainless steel coarse mesh screen. Louvers shall incorporate hoods or baffles as required to provide the specified sound attenuation.

H. The enclosure shall include hardware to internally mount the specified exhaust silencer and maintain the weatherproof integrity of the system.

I. Power supply for the jacket water heater, alternator space heater, battery charger, and one duplex grounded ground fault protected convenience outlet shall be hard wired to junction boxes for field wiring connection of AC service power by the CONTRACTOR. Furnish a four gang GFCI outlet box located to power the jacket heater, battery charger, and battery heater and for easy accessibility for use with portable equipment with conduit and wire extending to the junction box. All wiring shall be XHHW type and shall run within galvanized rigid steel conduit.

J. All openings in the enclosure shall be screened, baffled, or otherwise closed to prevent

the entrance of insects and rodents.

K. The housing shall have OSHA approved signs on all four sides of the enclosure reading "Danger-High Voltage".

L. It is the intent of this Specification to provide complete compliance with all applicable codes, laws and regulations.

2.08 AUTOMATIC TRANSFER SWITCH

A. Furnish, install, test and place into operation the automatic transfer switch with features, accessories and enclosure as specified herein. Automatic transfer switches shall be rated for [___] amperes, 480 volts, 3 phase, 4 wire, solidly grounded, 65,000 AIC withstand/closing rating. The automatic transfer switch shall consist of an inherently double throw, 3 pole power transfer switch unit and a controller interconnected to provide complete automatic operation, and shall have three-position operation: closed to normal source, open, closed to standby source. Time delay between opening of the closed contacts and closing of the open contacts shall be a minimum of 400 milliseconds to allow for voltage decay before transfer is complete.

B. Submit shop drawings and product data as follows:

1. Equipment outline drawings and master drawing index showing elevation, plan and interior views, dimensions, weight, anchor bolt pattern and front panel layouts.

2. Provide a list of all options, special features and ratings.

3. Conduit entrance drawings.

4. Furnish complete Bill of Materials indicating manufacturer's part numbers.

5. Assembly ratings including short circuit rating, voltage and continuous current.

6. Cable terminal sizes.

7. Instruction and renewal parts books.

C. Quality Assurance

1. The automatic transfer switches shall be UL 1008 listed for use in standby systems in accordance with Sections 517, 700, 701 and 702 of the National Electrical Code.

2. The automatic transfer switch shall be certified to ISO 9001 International Quality Standard and the manufacturer shall have third party certification verifying

quality assurance in design, development, production, installation, and servicing.

3. The automatic transfer switch shall be ASCO 300 Series.

D. Features and Accessories

1. The following accessories shall be furnished:

a. An adjustable time delay of 0 to 30 seconds shall be provided to override momentary normal source outages and delay all transfer and engine starting signals, factory set at 3 seconds.

b. Adjustable time delay on retransfer to normal shall be provided. Time delay shall be automatically bypassed if the generator fails and the normal source is available. Time delay shall be field adjustable from 0 to 30 minutes. (Set at 30 minutes).

c. An unloaded running time delay for generator cool down shall be provided. Time delay shall be field adjustable from 0 to 60 minutes. (Factory set at 5 minutes).

d. Time delayed neutral position with field adjustable timer. Neutral position shall delay transfer switch operation in a neutral state to prevent re-energizing the system while motors are spinning. Timing shall be set in the field based on each specific site motors.

e. A time delay on transfer to standby shall be provided, factory set at 5 seconds but field adjustable up to 5 minutes.

f. Auxiliary contact to close when normal fails (for engine start).

g. Close differential adjustable relay under voltage protection on all three phases of the normal and standby sources, set to drop out at 80 percent of rated voltage and pick up at 90 percent of rated voltage. Over voltage relay protection shall drop out at 104 percent of rated voltage and pick up at 2 percent below trip.

h. Close differential adjustable relay under frequency sensing on all three phases of the generator source, set to drop out at 85 percent of rated frequency and pickup at 90 percent rated frequency. Over frequency relay protection shall drop out at 104 percent of rated frequency and pick up at 2 percent below trip.

i. Voltage unbalance relay shall be set to drop out at 5 percent and pick up at 1 percent below drop out.

j. Auxiliary Contacts

1) One to close when normal fails (Status to computer)

2) One to open on standby (Combustion air damper control)

3) One to close on standby (Status to computer)

4) One to close on standby (Generator Supplying Load)

5) One to open on standby (Spare)

6) One to close on normal (Status to computer)

7) One to open on normal (Spare)

k. A green pilot light to indicate when the automatic transfer switch is connected to the normal source. A red pilot light to indicate when the automatic transfer switch is connected to the standby source.

E. Enclosure

1. The automatic transfer switch shall be furnished with a NEMA 4X, 316 stainless steel enclosure.

F. Signage

1. The automatic transfer switch shall be furnished with a sign on all doors marked DANGER - 480 VOLTS - KEEP OUT. Letters shall not be less than 1-in high, 1/4-in stroke. Signs shall be laminated plastic, engraved white letters with a red background.

G. Field Testing

1. Perform the following minimum tests and checks on the automatic transfer switch:

a. Megger incoming line terminals and buses, phase-to-phase and phase-to-ground after disconnecting devices sensitive to megger voltage.

b. Check polarity and continuity.

c. Check mechanical interlocks for proper operation.

d. Test ground connections for continuity and resistance.

e. Adjust unit doors.

f. Check control circuit interlocking and continuity. Provide external source of control power for this test.

g. Adjust timing devices to their correct settings.

h. Simulate power failure and demonstrate that the engine-generator automatically starts and the electrical load is transferred to standby power.

i. Simulate restoration of normal power.

2.09 SURFACE PREPARATION AND SHOP PAINTING

A. The engine driven generator set and associated equipment shall be shop primed and finished coated in accordance with the manufacturer's standard practice prior to shipment. Furnish an adequate supply of touch-up paint.

2.10 SHOP TEST

A. Shop test the complete engine driven generator unit and the generator control panel prior to shipment. Submit the complete certified test record. The tests shall demonstrate that the unit will operate successfully and meet the specified operational requirements. The manufacturer shall furnish all instruments, filters, fuel gas, electric power and load banks for the test.

B. The shop test shall include operation on a reactive load bank at 0.8 power factor at rated standby load. During operation, test and record voltage and frequency regulation, and voltage and current balance to confirm compliance with this specification. Perform tests to demonstrate transient response from zero load to full load, zero load to half load, and half load to full load. Test each of the automatic alarm and shut-down devices and record the settings at which the automatic devices actually alarmed and/or stopped the engine. Submit copies of the shop test record.

C. During the factory test, take readings and record results for each of the following:

1. Time

2. Ambient temperature.

3. Load:

a. Volts [for each phase]

b. Amps [for each phase]

c. Kilowatts

d. Frequency

e. [Power Factor]

f. Engine Speed

4. Engine jacket water temperature

5. Lubricating oil pressure

D. The model generator to be furnished shall be manufacturer factory prototype tested in accordance with IEEE Standard 115 with report data included in the Submittals and generator Operation and Maintenance manuals. Testing shall include the following:

1. Cold resistance of all windings

2. Insulation resistance of all windings

3. Polarity of field coils

4. High potential on all windings

5. Open circuit saturation

PART 3 EXECUTION

3.01 INSTALLATION

A. Provide the services of a factory field representative to check the installation of the generator unit and appurtenances, to ensure installation in accordance with the manufacturer’s recommendations, perform check-out and start-up services, and conduct the field test.

B. Mount the generator enclosure skid base on a concrete foundation and level to provide equal bearing for all supports as work of this section. Utilize grout or other approved means to level the mounting surface of the foundation to provide equal bearing for all supports. Furnish and install anchors in accordance with the submitted foundation design. Connect the unit to field wiring and to fuel supply piping.

C. Installation shall include furnishing all required coolant and lubricants in accordance with the manufacturer’s recommendations.

3.02 EQUIPMENT START-UP

A. After installation and manufacturer's representative check of the installed equipment, operate the unit to demonstrate its ability to operate continuously without vibration,

jamming, leakage or overheating and to perform specified functions.

B. Comply with manufacturer's operating and maintenance instructions during start-up and operation.

C. Promptly correct improper installation of equipment.

D. Cooperate with supplier of equipment at time of start-up and in making of all final adjustments necessary to place equipment in satisfactory working order. Start-up shall not commence without the presence of the manufacturer's representative.

3.03 FIELD TEST

A. Upon completion of installation and as soon as conditions permit, test the generator unit, controls, and appurtenances for acceptance, including load bank testing and operation under actual operating conditions, to demonstrate that operation is satisfactory. Before conducting the on-site field tests, submit a copy of the proposed field test log sheet. Prior to scheduling the test, notify the Engineer in writing that all requirements and provisions of the Contract Documents have been fulfilled, that all apparatus has been cleaned, properly adjusted, and is ready for operation, and that the Operation and Maintenance manuals have been submitted. Perform testing in the presence of the Engineer.

B. The test shall consist of four (4) hours of continuous operation of the engine driven generator unit at unity power factor using a temporary portable resistive load bank. Load bank testing load on the generator set shall be adjusted, starting with half hour intervals each at 1/4 load, 1/2 load, and 3/4 load followed by the remaining time at full load. Furnish the load bank plus all connecting cables, metering equipment, and other equipment or devices required, and fuel to perform the load bank testing. During the test, take and record the same readings as outlined under Shop Test, at fifteen minute intervals.

C. As part of the field test, test each of the automatic alarm and shutdown devices and record the respective values at which the devices will alarm and/or stop the engine. Perform any adjustments required in the alarm settings to make the operating values correspond to those recommended by the engine manufacturer and as recorded during the shop test. Verify that each alarm point activates the designated remote alarm contact and that the monitoring and alarm connections to the SCADA system will activate the corresponding indications at the SCADA panel. Test the remote emergency stop. Testing shall include verification of proper voltage regulation, transient voltage dip and recovery time, and voltage and current balance.

D. After the load bank test has been completed, connect the generator to the facility load, and perform additional testing utilizing the main circuit breaker to simulate a utility power failure, to demonstrate the generator unit’s ability to meet the automatic starting, load transfer, and motor starting requirements as specified herein, utilizing

facility load as available. Operate the facility on generator power for at least 30 minutes then restore utility power via the main circuit breaker, to cause the transfer switching to reset and shut down the generator. Record generator operating parameters as specified above.

E. The CONTRACTOR shall provide a person qualified to conduct sound pressure level testing, and test instrumentation, to take and record octave band sound pressure level readings at the time of the on-site field test, when operating the generator at maximum available station load (no load bank operation). The sound pressure readings shall be within the limits permitted by this specification. If changes are necessary to accomplish the required silencing, perform revisions as required and retest.

F. If the standby power supply system fails to fulfill the requirements of this specification, perform corrections and retest the system to assure full compliance at no additional cost to the Owner.

3.04 TRAINING

A. The equipment manufacturer shall furnish the services of a factory representative who has complete knowledge of proper operation and maintenance for a minimum of one, eight hour working day to instruct representatives of the Owner and the Engineer in the proper operation and maintenance of the equipment.

B. Training shall be provided at the site and timed to accommodate all working shifts, including some late evenings, and early mornings. The instruction period shall be scheduled at least ten working days in advance with the Owner and shall take place prior to start-up and acceptance of the equipment by the Owner. Training shall include system operations, preventive maintenance, and troubleshooting.

C. Submit, at least 30 working days prior to the start of training, a training syllabus that includes the above requirements, proposed dates and times for training, and instructor resume. Training may not commence until the first draft of the O&M manual has been submitted for review.

END OF ATTACHMENT A

3.3.9 Attachment B: Diesel Engine Driven Generator

ATTACHMENT B
DIESEL ENGINE DRIVEN GENERATOR

PART 1 GENERAL

1.01 SCOPE OF WORK

A. Furnish all labor, materials, and equipment and incidentals, and install, one new skid mounted diesel engine driven generator unit with a sub-based diesel fuel tank, an automatic transfer switch, appurtenances and required supporting systems in a factory type skin tight weatherproof sound attenuated enclosure as specified herein. Require the manufacturer or manufacturer's representative to furnish installation assistance, start-up operation, field test, operator training, first year service contract, and operation and maintenance manuals.

B. The engine driven generator shall have a stand-by power rating (site rated) of not less than ____ kVA, ____ kW, at 80 percent lagging power factor, with 480 Volt, three phase, 60 Hertz output. The alternator shall be three wire, grounded wye connected, complete with excitation system and controls.

C. Arrange the generator for automatic starting and stopping and load transfer upon failure of the normal source of power. Parallel operation with Power Company is not required. Transfer to and from facility load will be open transition transfer.

D. All equipment and controls specified in this Section shall be new and be considered part of the engine driven generator package. The generator manufacturer or his/her licensee shall furnish the package in its entirety as specified. The engine driven generator package shall be complete and shall include all equipment and controls necessary for a fully operational standby power supply.

E. Furnish the following for each unit:

1. Diesel engine with attached alternator.

2. Generator main circuit breaker.

3. Unit mounted radiator with engine driven fan, for cooling of the engine jacket water including engine mounted and engine driven circulating pump.

4. Entire exhaust system including silencer, flexible connection, exhaust pipe, and pipe supports mounted inside the enclosure.

5. Fuel system piping, tanks and appurtenances.

6. Skid mounted, factory-piping, wiring and valves.

7. Flexible connectors and/or expansion joints for field piping.

8. Automatic control valves.

9. Factory manufactured weatherproof, sound attenuating, skintight enclosure for outdoor installation of the unit.

10. Combination engine/alternator instrument and control panel wired, tested and shock mounted at the alternator end of the unit.

11. Engine mounted electric starters with battery and battery charger.

12. Generator structural steel base including rubber pad type vibro isolators.

13. UL listed sub-base fuel tank.

F. Provide the services of the generator manufacturer's representative for delivery, installation, set-up, start-up testing, and training of the Owner's personnel.

1.02 SUBMITTALS

A. Submit shop drawings and product data to establish compliance with this section, including the following:

1. Shop drawings, catalog cuts, internal wiring schematics and other materials required to completely describe the systems and equipment being furnished.

2. Assembly drawings with identification, description, and dimensions of each separately installed sub-assembly or piece of equipment and associated piping connection schematics.

3. Certificate of Compliance for Seismic Design of Non-Structural Components and Systems in accordance with ASCE 7, Section 13 and the IBC, for the generator assembly, enclosure, and accessory components attached to the generator assembly and enclosure, demonstrating that the equipment and its mounting system and anchorage have been tested or analyzed to withstand specified seismic demands.

4. Equipment base drawings indicating the size and location of bolt holes for anchorage, and location of conduit stub-ups.

a. Details of anchorage of the equipment to the foundation including anchor bolt type, size, material, embedment depth, and minimum edge distance.

b. Summary of maximum vertical and horizontal reactions at each anchor bolt

considering all applicable loads and load combinations.

5. Performance specifications of all items of equipment.

6. Description of the generator control panel showing panel layout, location, functional description, features, and options.

7. Internal electrical, instrumentation, control, and wiring diagrams.

8. Identification of all wiring connections to external systems and equipment, including numbered terminal strip identification.

9. Details of the proposed battery charger and starting battery, including cold cranking amps and ampere hour rating.

10. Information on the proposed jacket water treatment including Material Safety Data Sheets.

11. The manufacturer, model, size, attenuation curve, and design back pressure for the silencing equipment as offered to accomplish the specified silencing for this installation.

12. Details of the main generator circuit breaker showing location, dimensions, ratings, and enclosure details.

13. Details of the jacket water heater and jacket water treatment.

14. Load analysis utilizing the loads as specified herein, to demonstrate that the proposed unit will start and carry the specified loads.

15. Alternator rating data sheet showing the alternator selection of frame size, output rating, efficiency, temperature rise, windings, reactances, resistances, full load current, and full load heat rejection.

16. Certification of conformity with engine emissions tier level.

17. Details of the sub-base fuel tank and fuel system piping.

18. Description of the factory manufactured, weather protected, sound attenuating enclosure including dimensions, materials and methods of construction, conformance to standards, description of all accessories and components, color charts of available colors, and enclosure circuit wiring diagrams.

19. Details of the arrangement of the exhaust piping system within the enclosure.

20. Statement certifying the maximum combined noise level from the engine exhaust and the mechanical noise from the enclosure when the generator unit is

operating at full rated standby load, stated in dbA at 50 feet from the unit in any direction.

21. Manufacturer's certified shop test record of the engine driven generator unit performed in accordance with specifications.

22. Draft copy of the written service contract specified herein.

23. Draft copy of the warranty specified.

B. Submit the following design data:

1. Engine Data

a. Manufacturer

b. Model

c. Number and arrangement of cylinders

d. RPM

e. Bore x stroke

f. Displacement (cubic inches)

g. Maximum power at rated RPM (brake horsepower)

h. BMEP at rated kw (including any parasitic loads and generator efficiency)

i. Piston speed, feet per minute

j. Aspiration

k. Make and model of governor

l. Make and model of overspeed shutdown device.

m. Maximum allowable engine exhaust back pressure

n. Engine cold cranking amperes

2. Alternator Data

a. Manufacturer

b. Model

c. Rated KVA

d. Rated KW

e. Voltage

f. Rated Amperes

g. Power Factor

h. Temperature rise above 40 degrees C ambient

1) Stator by thermometer (degrees C)

2) Field by resistance ___ degrees C

i. Class of insulation (degrees C)

j. Alternator efficiency including excitation losses and at 80 percent PF

1) Full load (percent)

2) Three-quarters load (percent)

3) Half load (percent)

k. Subtransient reactance (x_d") (per unit) or (ohms)

3. Guaranteed fuel consumption rate (at generator terminals)

a. Full load (gal/hr)

b. Three-quarters load (gal/hr)

c. Half load (gal/hr)

4. Generator unit and accessories

a. Weight of skid mounted unit (lbs).

b. Overall length (inches)

c. Overall width (inches)

d. Overall height (inches)

e. Exhaust pipe size (inches)

5. Exhaust gas emissions data, maximum values at loads varying from full to 1/4 load:

    a. Temperature (degrees F)

    b. Flow (ACFM)

    c. Carbon Monoxide (CO) (grams/BHP-hr)

    d. Nitrogen Oxides (NOx) (grams/BHP-hr)

    e. Hydrocarbons (HC) (grams/BHP-hr)

    f. Sulfur Dioxide (SO2) (grams/BHP-hr)

6. CFM of air required for combustion and ventilation based upon inlet air temperature of 40 degrees C: (CFM)

7. Heat radiated to room by engine and generator: (BTU/min)

8. Heat rejected to jacket water including lubricating oil (BTU/min)

9. Radiator (engine driven) fan cooling air volume and required BHP (BHP)

10. Nominal cold cranking ampere rating of the starting battery.

1.03 REFERENCE STANDARDS

A. Design, manufacturing and assembly of elements of the equipment herein specified shall be in accordance with but not limited to published standards of the following, as applicable:

1. American Gear Manufacturers Association (AGMA)

2. American Institute of Steel Construction (AISC)

3. American Iron and Steel Institute (AISI)

4. American Society of Mechanical Engineers (ASME)

5. American National Standards Institute (ANSI)

6. American Society for Testing Materials (ASTM)

7. American Welding Society (AWS)

8. Anti-Friction Bearing Manufacturers Association (AFBMA)

9. Institute of Electrical and Electronics Engineers (IEEE)

10. National Electrical Code (NEC)

11. National Electrical Manufacturers Association (NEMA)

12. Occupational Safety and Health Administration (OSHA)

13. Steel Structures Painting Council (SSPC)

14. Underwriters Laboratories, Inc. (UL)

B. Where reference is made to one of the above standards, the revision in effect at the time of bid opening shall apply.

1.04 QUALITY ASSURANCE

A. Build the generator from components that are coordinated and prototype tested to operate as a unit. The manufacturer shall maintain a permanent service organization and supply of spare parts in place at the time of the bid within 100 miles of the project site.

B. Design and build the unit in accordance with NFPA 110, Standard for Emergency and Standby Power Systems, Level 2, Type 60; NFPA 37, Standard for Installation and Use of Stationary Combustion Engines and Gas Turbines; and NEC 701, Legally Required Standby Systems. Build and certify the unit construction is in accordance with UL 2200, Stationary Engine Generator Assemblies.

C. The load on the standby generator may include motors started on solid state starters that represent up to 90% percent of the generator's standby rating. Coordinate design of the generator and its voltage regulation system with the supplier of the solid state starters and other non-linear devices to assure that sufficient alternator reactance is provided to limit the line harmonics to acceptable levels as specified in IEEE Standard 519 and to assure that the voltage regulation system will provide stable operation in the presence of such harmonics.

D. The unit shall be of such physical dimensions to fit into the space provided as indicated on the Drawings.

E. Should equipment that differs from the equipment described in this section be offered and determined to be equal to that specified such equipment shall be acceptable only on the basis that any revisions in the design and/or construction of the structure, piping, appurtenant equipment, electrical work, etc., required to accommodate such a substitution shall be made at no additional cost to the Owner and be as approved by the Engineer. Modifications required to accommodate product substitutions shall not extend the contract time.

F. Design and build the engine driven generator for standby service at all points within the specified range of operation, without overheating or excessive vibration or strain. Components shall require only that degree of maintenance as applicable to the specific type of equipment. Design and build all parts and components for interchangeability so that replacement parts may be installed without additional fitting or machining.

G. Furnish the services of a factory trained service technician, specifically trained on the type of equipment specified. Submit qualifications of the service technician for approval. The service technician shall be present on–site for a total of one man-day, exclusive of travel time, to perform equipment check-out, leveling and alignment, coordination of electrical connections, start-up, testing, and calibration of the unit.

1.05 service contract

A. Provide to the Owner at the time of acceptance of the unit a written five (5) year service contract for the engine driven generator and support systems, as furnished, commencing on the date of acceptance of the unit. Include all costs associated with the service contract in the price bid and furnish a copy of this contract to the Owner at the time of acceptance. This service contract does not supersede or replace the manufacturer's equipment warranty as specified herein.

1. The service contract shall include inspections of the installation and performance of the manufacturer's recommended preventive maintenance to assure the safe and dependable operation for the standby power system throughout the first year of operation for standby service with up to 300 hours per year of operation.

2. The preventive maintenance shall include all maintenance service at the recommended service intervals as published in the manufacturer's literature, and as required to maintain the equipment warranty in full effect. The service contract shall include as a minimum an inspection to sample and analyze lubricating oil; change lubricating oil and filters; check/replace air filters; check belts; sample and analyze coolant; check coolant level and condition, inspect ignition system; inspect governor and control system; check heaters; inspect fuel supply system, exhaust system, starting battery, battery charger, and battery charging alternator; check and adjust output voltage and frequency; and operate the unit to confirm proper operation.

1.06 WARRANTY

A. Furnish a written five year (60 Months) extended warranty from the equipment manufacturer to the Owner, on all equipment furnished under this Section when operated as a standby unit for up to 300 hours per year. The warranty shall extend from the date of acceptance of the equipment and shall include all parts, labor, and

transportation for replacing any defective components of the equipment as furnished.

1.07 SPARE PARTS ALLOWANCE

A. The generator supplier shall include in the bid price an allowance of $[____] for spare parts that are not covered under the equipment warranty, to be selected by the Owner. Submit a spare parts list that includes manufacturer's recommended spare parts, with parts prices current to the date of submittal, and information relevant to parts supply and ordering. Submit this information in time for review and approval prior to start-up and site testing of the unit.

1.08 MAINTENANCE

A. Submit operating and maintenance instructions covering all equipment furnished under this Section. Prepare the instructions specifically for this installation and include all required cuts, drawings, equipment lists, descriptions, etc., that are required to instruct operating and maintenance personnel unfamiliar with such equipment.

1.09 UNIT PERFORMANCE

A. Select the engine driven generator to be adequate to start one [__]HP, three phase, Code Letter [__], pump motor using a [full voltage] [solid state reduced in-rush] starter, along with [__] kVA of three phase additional load and [__] kVA of single phase miscellaneous load at 0.9 power factor; and with a transient voltage dip not to exceed thirty percent of rated voltage.

B. The unit rating shall not be less than [__] kW. Provide an oversized alternator or enhanced voltage regulator as required for motor starting and to carry non-linear loads. The specified unit site rating is the minimum acceptable for the specified loads, and shall be increased if required to meet the load starting or running requirements as specified herein.

C. The engine driven generator set and all of its components shall provide stable operation under all operating conditions that the station load may impose.

D. Under steady load conditions, from zero load to full-rated load, voltage regulation shall be within plus or minus one percent, and frequency regulation shall be within plus or minus 0.25 percent (0.15 Hertz).

E. Upon application or removal of full rated resistive load in one step, the transient voltage dip or overshoot shall not exceed 25 percent of rated voltage and recovery to steady state operation shall be within ten seconds.

1.10 DELIVERY, STORAGE AND HANDLING

A. All mechanical and electrical equipment shall be coated, wrapped and otherwise protected from snow, rain, drippings of any sort, dust, dirt, mud, flood and condensed water vapor during shipment and while installed in place during construction. The protective coverings shall remain in place until the work areas are substantially free of all construction dust and debris.

B. Package and crate the unit for shipment and provide treatment for long periods of storage.

1.11 PROJECT/SITE REQUIREMENTS

A. House the complete engine driven generator unit in a factory type skin tight weatherproof sound attenuating enclosure for outdoor installation. Arrange the unit for automatic operation and for positive and successful quick starting at a minus 20 deg. C outdoor ambient temperature. Design all equipment housed within the generator enclosure for a maximum operating temperature based upon a maximum ambient temperature of 40 deg. C plus the temperature rise that will occur within the enclosure either during generator operation or with maximum solar heating when the generator is not in operation. Factory assemble the generator unit with enclosure and accessories as specified herein, ready for installation on a concrete foundation with openings for conduit risers. The unit shall not require field assembly.

B. The engine driven generator unit within its enclosure, in combination with the engine exhaust silencer, with the generator in operation at full load, shall have a sound pressure level of not more than 70 dbA measured at a distance of 50 feet from the enclosure in any horizontal direction. There shall be no pure tone. It shall be the responsibility of the engine driven generator unit manufacturer to choose the engine exhaust silencer and the sound attenuating properties of the enclosure to meet these criteria.

C. The altitude at the project site will not be in excess of 1000 feet above sea level.

D. The heat sink for rejection of heat from the engine jacket shall be a unit mounted radiator utilizing an engine mounted and engine driven fan to discharge air through the radiator and through a louver to outdoors. Design the radiator and engine fan to dissipate all required heat loads with the generator running at full rated output and with 40 deg. C ambient outdoor air. No other source of cooling as available or will be permitted.

E. Certify engine exhaust emissions in compliance with applicable EPA Tier rating for new stationary emergency diesel engine driven generator sets in the power range specified herein. Design the engine and fuel control system to limit the exhaust emissions of the engine to the limits imposed by these regulations.

F. Design and build all non-building structures and provide seismic restraint of nonstructural components to withstand seismic demands to provide post seismic event

functionality in accordance with ASCE 7, Section 13 and the IBC.

G. Design the enclosure base and attachment to the concrete foundation to support the gravity loads, dynamic loads, wind loads and seismic forces to conform to ASCE 7, Section 13 and the IBC. Furnish and install anchorage in accordance with the manufacturer's requirements, sized and quantity as determined by the anchorage calculations required in this Section.

H. Enclosure exterior length shall fit in the space available on site.

PART 2 PRODUCTS

2.01 GENERAL

A. The engine-generator set shall be a factory assembled unit, specifically designed and equipped for operation on No. 2 diesel fuel oil, and shall be Caterpillar/. The engine and generator shall be directly connected with a semi-flexible steel coupling, shall be free from injurious torsional or other vibration and shall be vibro-mounted with a heavy steel sub-base. The diesel engine shall be four stroke cycle, using engine jacket water, full diesel, mechanical injection, arranged for direct connection to an alternating current generator. The unit shall operate at a rotative speed of not more than 1800 rpm and shall develop its full KW rating including radiator fan. Units offered at ratings in excess of their published ratings are not acceptable and will not be approved.

B. The engines shall be rigid, neat in appearance and shall allow easy access to the various parts for maintenance purposes. The bed plate and frame shall be of heavy construction. All parts shall be properly enclosed to prevent the throwing or dripping of oil.

C. The engine-generator sets shall be pre-piped and pre-wired insofar as possible. Separate pre-wired terminal boxes shall be provided on the engine-generator skid for A.C. and D.C. wiring. All wiring terminations for connection to field wiring shall be within terminal boxes utilizing numbered terminal strips.

D. Mount the close coupled engine and alternator assembly on a rigid, welded, fabricated steel base, sized to maintain the correct alignment of all system components. Fabricate the base of steel I-beam or box section, braced and reinforced as required to maintain alignment between the engine and the alternator. Mount the engine-alternator assembly on the base utilizing rubber pad type vibration isolators and felt washers. Mount the engine radiator and battery support separately on the base, independent of the engine-alternator assembly. The complete generator unit shall be free from harmful torsional or other vibration. Shop prime and finish paint all exposed surfaces of the structural steel members of the fabricated base frame in accordance with the manufacturer's standard practice.

2.02 ENGINES

A. General

1. The engines shall be capable of withstanding a 10 percent overload for two hours out of every 24 hours without harmful detonation, overheating or other evidence of distress.

2. The complete engine-generator unit shall be free from harmful torsional or other vibration throughout the entire operation range of speed and load.

3. The engines shall use in-cylinder combustion technology, as required, to meet applicable EPA NSPS rule for stationary reciprocating compression ignition engines. The engine shall also comply with the State Emission regulations at the time of installation /commissioning. Actual engine emissions values must be in compliance with applicable EPA emissions standards per ISO 8178 – D2 Emissions Cycle at specified ekW/bHP rating. Utilization of the “Transition Program for Equipment Manufacturers” (also known as “Flex Credits”) to achieve EPA certification is not acceptable. The in-cylinder engine technology must not permit unfiltered exhaust gas to be introduced into the combustion chamber. Emissions requirements / certifications of this package: EPA T4 Interim.

2.03 SYSTEMS

A. Governor

1. The governor shall be an electronic engine control module with 24-volt DC electric actuator. Speed droop shall be adjustable from 0 to 10%, from no load to full rated load. Steady state frequency regulation shall be plus or minus 0.25%. A provision for remote speed adjustment shall be included.

2. Furnish also a separate overspeed shutdown device which shall, in case of predetermined overspeed or the operation of various protective devices as later specified, instantly stop the engine without the fuel injection system losing its prime.

B. Supporting Structure

1. The diesel engine-generator shall be directly bolted, doweled, and aligned on a rigid, fabricated steel base, suitably sized to maintain the correct alignment, supported by Korfund or equal heavy duty rubber pad type vibration isolators, anchored to the level surface of a concrete pad.

2. Furnish required quantity of generator manufacturer supplied heavy duty rubber pad vibration isolators, Korfund or approved equal, installed between the bottom

of the engine generator set base and the top of the sub base generator mounting surface.

2.04 SYSTEMS

A. Fuel Oil Systems

1. The fuel system shall be integral with the engine. It shall consist of a fuel filtration system; engine mounted mechanically driven transfer pump, injection pumps, supply and return fuel lines, and fuel injectors. The transfer pump shall be engine driven and shall deliver fuel under low pressure to individual injection pumps. The generator set shall be installed on top of the sub base diesel fuel oil tank and the designed and installed fuel system shall be capable of delivering fuel flow from the sub-base fuel tank to the engine fuel inlets or nozzles, at any level of fuel within the tank, sufficient for full rated operation of the engine under all ambient temperature conditions and shall return any unused fuel to the sub base tank

2. Provide a fuel filter/water separator system installed on the engine and flexibly connected to the sub base tank engine fuel supply. The filter shall be of the replaceable filter type, with clear water/sediment trap bowls for each. Fuel shall be piped with flexible connections from the filter/water separator system to the intake of the engine fuel pump and then from the engine's fuel return to the sub base tank engine fuel return. Provide a foot valve at the bottom of the sub base tank engine supply tube.

3. Provide fuel lines as required to complete the connections of the fuel supply and fuel return between the engine and the sub base tank. Use diesel fuel oil impervious flexible connections at the engine fuel supply and return connections.

4. The generator set shall be equipped with a double walled sub base diesel fuel oil tank, UL142 Listed and nameplate labeled for stationary installation. A sub base tank electronic leak detection system shall be provided and an alarm contact shall be provided for annunciation at the automatic transfer switch. The sub base tank and all parts of the fuel system shall meet the approval of, and be installed in complete compliance with, all applicable local, state and federal codes, laws and regulations.

5. Diesel fuel oil generator set sub base fuel oil tank construction.

   a. The UL 142 generator set sub base tank shall be of all corrosion-resistant steel construction and double walled for 110% secondary containment. The sub base tank shall be designed and constructed in accordance with UL requirements to support the total wet weight of the generator set and contained fuel. The primary tank shall be sized so as to provide a minimum

quantity of useable diesel fuel oil to allow seventy two (72) hours of generator set operation at full generator set rated load. The tank design shall allow for additional capacity in the top of the tank to prevent spillage as fuel heats and additional capacity at the bottom of the tank to prevent entry of fuel sludge buildup into the engine.

b. The sub base fuel oil tank shall be designed and constructed so as to allow proper installation of the generator set on the sub base tank.

c. The tank shall incorporate steel plate lifting points constructed so as to lift the installed sub base tank and generator set, less fuel oil weight. The tank shall be manufacture red with four (4) lifting points, approved by UL with a 4 to 1 safety factor consisting of minimum of 1.25 inch thick (nominal) steel plates welded into the tank base perimeter with eyelets designed and installed so as to allow single point lifting of the empty sub base tank with the generator set installed on top of the sub base tank.

d. The sub base tank shall incorporate appropriately spaced external cross support channels installed on the bottom of the tank across the width of the sub base tank as required to properly support the sub base tank, generator set, and fuel weight and provide a two inch air space between the bottom of the tank and the top of the concrete foundation. Each cross support channel shall include mounting restraint points on both ends to allow for adequate attachment of the sub base tank to the site's mounting foundation. Provide drawing indicating dimensional locations for each of the foundation mounting attachment points for the sub base tank.

e. The tank shall incorporate suitable internal stiffeners to create a smooth tank top surface and to limit the accumulation of water. The outer tank shall be abrasive blast cleaned and shall be properly surface prepared and coated with high build polyester glass flake and finish coated with a long lasting, weather and UV resistant aliphatic polyurethane enamel. The tank shall be constructed with no sharp edges to insure uniform coating coverage on all surfaces. No external support beams for the generator set shall be permitted on top of the tank.

f. The tank shall be provided with a minimum of generator supply and return, lockable covered fuel fill, mechanical fuel level gage, required primary and secondary tank primary and emergency vents, low fuel level, high fuel level, and fuel leakage float sensors, primary and secondary tank drains with fittings. It shall include inner and outer tank standard and emergency venting with vent caps as required by UL142 and NFPA. Engine fuel supply and return fuel line flexible connections are to be furnished and installed. Furnish a removable foot valve in the bottom of the sub base tank's engine supply drop tube piping.

g. The tank shall be furnished with low fuel level, high fuel level and fuel leak float sensors/switches. These alarm contacts shall be provided for annunciation at the automatic transfer switch. The low and high level switches shall monitor the primary fuel tank and the leak detector switch shall sense the interstitial tank. All tank level sensor penetrations shall exit the top of the tank. All level switches / sensors and wiring and conduit are to be installed in the sub base tank and wired to the generator set for local and remote alarms.

h. Provide an approved sub base tank installed and an interior-located covered fuel fill/overspill lockable fuel oil containment box, minimum of seven (7) gallon capacity positive fuel containment box with approved anti-siphon valve and mechanical duel fill limiter with tight fill connection inside of the containment box to shut off the flow of filling fuel at 95 % of tank capacity. Provide a spring loaded drain pull to allow fuel contained within the fill box to be returned directly into the primary fuel tank.

i. Provide an installed mechanical fuel level gage to monitor fuel tank fuel level range from empty to full. The gage shall be suitable for outdoor use and shall be located and installed on top of the sub base tank near the tank's fuel fill location.

j. Provide complete dimensional and weight information for the generator set and sub base tank assembly, including detailed mounting information for generator site foundation construction considerations.

B. Air Intake Systems

1. The engines shall be equipped with suitably sized dry type air intake filter(s) to protect working parts of the engine from dirt and grit with replaceable type filter element. In-line air inlet silencers shall be provided between the turbocharger and the air inlet filter. A crankcase breather shall be included.

C. Lubrication System

1. The engines shall be provided with a full pressure lubricating oil system arranged to cool the pistons and to distribute oil to all moving parts of the engine including the turbocharger bearings and including full flow filter of the replaceable element type and a suitably sized shell and tube type oil cooler and an AMOT or equal automatic temperature regulator. An engine driven lubricating oil circulating pump shall be provided for the engine. This pump shall be of the positive displacement type, and shall have ample capacity to circulate the amount of lubricating oil and cooling oil required by the engine and turbocharger. The engines shall be provided with a sump type crankcase arrangement of sufficient capacity to suit the requirements of the engine.

D. Radiator Cooling System

1. The engine shall be radiator cooled with a blower or pusher type fan mechanically driven by the engine. The fan shall provide a static pressure rise of not less than 0.5 inches of water in addition to the losses through the radiator, to move the required air flow through the intake louver and discharge plenum and louver to provide the cooling required by the unit. The radiator shall incorporate flanges for attachment of a flexible duct connection to the exhaust plenum. Provide guards for fan, belts, and hot surfaces in accordance with OSHA regulations and UL 2200. The cooling system shall be adequate for cooling the engine at full rated load with an outdoor ambient temperature of 40 degrees C plus the temperature rise corresponding to the heat given off by the alternator and equipment hot surfaces. Provide a coolant low level switch in the radiator top tank, wired to the low coolant alarm on the generator control panel.

2. Furnish an engine driven, centrifugal coolant pump equipped with a mechanical seal to circulate the coolant through the engine and radiator. Provide an automatic temperature regulator for the engine coolant that will maintain pre-set temperature without restricting the rates of flow of coolant through the engine.

3. Coolant shall be for use in ambient temperatures which may range from -20 to 40 degrees C, and shall be a 50 percent ethylene glycol antifreeze solution conforming to ASTM D-4985 and D-5345. The coolant shall be premixed extended life type and shall contain additives as recommended by the engine manufacturer for the prevention of both scale formation and corrosion in the engine water jackets and cooling system components that are in contact with the engine coolant. Coolant with additives shall be as manufactured by the NALCO Chemical Company, Dow Chemical, Aqua Laboratory, or equal.

4. Provide an engine mounted thermostatically controlled heater for the engine coolant system to maintain not less than 32 degrees C in the engine jacket to assure quick start and load transfer with an ambient temperature of -20 degrees C. The heater shall include valves or quick disconnects to allow isolation and removal of the heater without draining the engine cooling system. The heater shall have a minimum rating of 1000 watts when operated on a 120 Volt single phase power supply. Provide a grounded plug to connect to a 120 Volt receptacle.

5. Provide a valve drain on the cooling system piped to the exterior of the enclosure. Provide flexible connectors at all connections of off-skid piping to the engine.

E. Electric (Battery) Starting Systems

1. Provide an engine mounted, 12 Volt DC solenoid shift electric starter capable of withstanding four, consecutive cranking periods of fifteen seconds cranking

each separated by fifteen seconds of rest.

2. The starting battery shall be low maintenance, long life, lead acid type, especially designed for spark ignited engine cranking service. Battery shall be of a capacity as recommended by the battery manufacturer for the necessary break-away current, cold cranking amperes, and ampere hour capacity for four consecutive cranking periods of fifteen seconds each, or for sixty seconds of continuous cranking without being recharged and with a battery temperature of ten degrees C and with the engine jacket maintained at 30 degrees C. The battery shall be manufactured by Caterpillar.

3. Furnish a skid mounted battery box specifically designed for battery service. Furnish full insulated battery covers. Furnish and install battery cables with terminals and connections for connecting the battery to the electric starter. Furnish all connectors and hardware, cables, grease, and lifting device.

4. Furnish an automatic battery charger for charging the starting battery. The charger shall be UL listed, solid state, electronic, fully automatic, float/equalize-type. The battery charger shall have automatic voltage sensing determined by the state of the battery and reducing to milliamp current on fully charged battery. Charger shall be for 120 volt, single phase, 60 Hertz alternating current input. Provide conduit and wire for the charger to a junction box installed inside of the enclosure for field wiring service power connection by the installing CONTRACTOR. The charger shall be not less than five (5) Amperes D.C. output capacity. Arrange the charger for wall mounting inside the generator enclosure. The battery charger shall provide control power to the generator control panel when the generator is not running with correct voltage and current output to provide proper battery charge rate for maximum battery life and control panel power requirements.

5. Provide an automatic thermostatically controlled battery pad heater rated 120 Volt, single phase power supply to maintain the battery temperature at a minimum of 10 degrees C when the ambient temperature is -20 degrees C. The heater shall automatically shut off when the battery temperature attains 30 degrees C. Provide a grounded plug to connect to a 120 Volt receptacle

F. Exhaust System

1. Furnish an exhaust silencer as manufactured by Maxim; Donaldson; Nelson, or equal, of aluminized steel construction, mounted and piped inside the enclosure. The silencer shall have not less than a critical rating and[, in combination with the catalyst,] shall attenuate the sum of the octave band levels converted to A-weighted sound pressure levels such that the noise level from the engine exhaust plus mechanical noise from the enclosure will conform to the noise limitation specified herein. There shall be no puretone. Size the silencer to operate within the maximum allowable backpressure of the engine, when installed in the

exhaust piping system as furnished.

2. Furnish a three-way, non-selective catalytic reduction unit for stoichiometric spark ignited engines, if required to meet the emissions requirements specified herein. The catalyst shall be a separate unit or shall be permanently built into the silencer housing. The catalyst housing shall be of stainless steel to provide the corrosion resistance required to allow the housing to be insulated to control heat rejection from the surface of the housing. The housing shall include 1/2 inch pipe taps before and after the catalytic element to allow monitoring of the exhaust gas flow upstream and downstream of the catalytic element.

3. Connect the exhaust silencer to the engine with a stainless steel bellows type exhaust expansion joint. The expansion joint shall be as recommended by the engine manufacturer for the maximum operating temperature of the exhaust, engine vibration, and for expansion of the exhaust system caused by a 650 deg. C temperature change. The expansion joint shall adapt to the engine exhaust outlet connection, and shall provide a flanged or threaded connection to the exhaust silencer.

4. Exhaust pipe shall be light wall exhaust tube as manufactured by GT Exhaust Systems, of Type 304 stainless steel, with clamp type joints. Exhaust pipe shall be of the size recommended by the engine manufacturer. All exhaust line elbows shall be long radius.

5. The exhaust pipe roof penetration shall be with an insulated Type 321 stainless steel or aluminum thimble designed to accommodate the specified exhaust pipe and allow a minimum 1-in air gap between the thimble and the pipe. There shall be no heat conduction path between the exhaust pipe and the roof. The roof thimble shall project above the finished roof and shall include Type 321 stainless steel or aluminum exterior rain flashing and insulation as required to protect the enclosure. Roof thimble shall be as manufactured by GT Exhaust Systems or equal. All portions of the exhaust system above the rain collar and exposed to the weather shall be of aluminum or Type 321 stainless steel construction. The open space between the exhaust pipe and the roof thimble shall allow for ventilation and shall include screening or mesh to prevent the entrance of insects.

6. Terminate the exhaust pipe vertically with a Type 321 stainless steel counterbalanced raincap with bronze bushings. The raincap shall be weighted such that the cap will open completely out of the exhaust air flow, causing no obstruction or deflection when the engine is running at rated speed without load.

7. Cover the interior exhaust system with insulation to limit the interior temperature rise of the enclosure and shield heat sensitive components from the exhaust pipe heat, and provide operator protection in accordance with UL 2200 during generator operation. The insulation shall not contain asbestos or asbestos

bearing products. Furnish and install all required steel support framing and hanger bands for supporting the silencer from the interior of the enclosure.

8. The entire installation shall meet with the Engineer's approval. It is the intent of this specification to provide complete compliance with all applicable local, State and Federal codes, laws and regulations.

2.05 ENGINE INSTRUMENTATION AND CONTROLS

A. The engine driven generator shall include a combination engine/alternator control panel, shock mounted in a unit-mounted NEMA 1 enclosure located at the alternator end of the unit, and oriented to be easily viewed [through the open enclosure doors] [when entering the generator room]. The control panel shall be all electronic type with two line alpha-numeric digital displays visible in any lighting condition. Panel construction shall conform to UL 508 for industrial control panels. Provide all interconnecting wiring between the engine/alternator set and the control panel. Direct communication with the control panel shall be with an environmentally sealed membrane keypad. The control system shall be PLC based. Furnish all software, instructions, and interconnecting cables required for PC communication with the control panel for adjustment and diagnostics.

1. Information displayed on the face of the panel shall include, but not be limited to, the following indications:

a. Lubricating oil pressure

b. Coolant temperature

c. AC volts, 0.5 percent accuracy

d. AC Amperes, 0.5 percent accuracy

e. Frequency meter, 0.5 percent accuracy

f. Output power (kW and kVA) (total and per phase)

g. Power factor

h. Non-resetting elapsed time meter calibrated in hours and tenths of hours

i. DC volts

j. Tachometer

k. Diagnostics for servicing

l. Emergency shutdown condition indication lamps for each shutdown

condition with logic to maintain lockout condition and fault light until reset.

2. Operators on the panel shall include:

   a. RUN-OFF-AUTO selector switch

   b. Emergency stop mushroom type push button.

   c. Voltage control

   d. Alarm test/reset pushbuttons.

   e. Phase selector switch

3. The panel shall also include:

   a. Necessary fuses

   b. Alternator voltage regulator

   c. Engine control module.

   d. Governor controller.

B. Control panel shall include a complete automatic engine start control that operates in response to closing a remote contact and stop control that operates in response to opening the remote contact.

1. The engine control module shall provide automatic cyclic cranking for at least four 15 second cranking periods separated by 15 second rest periods. If the engine fails to start after the last cranking cycle, the cranking limiter shall terminate further cranking and activate the overcrank alarm. The cranking limiter shall automatically disengage the starter when the engine fires and accelerates to operating speed.

2. The generator controls shall include a three-position switch with the following positions: RUN-OFF-AUTO. In RUN, the engine shall start and run with load transfer controlled from a remote location; in OFF, the engine shall stop and shall not start; in AUTO, the engine shall start, run and stop from a remote two-wire signal from the automatic transfer switch furnished. Load transfer shall occur when the unit attains rated voltage and frequency.

3. The generator controls shall include an automatic cool-down timer, to allow the engine to continue to operate after load transfer back to the normal power supply, to cool down prior to automatic shut-down. The timer shall be adjustable from zero to ten minutes and shall be engaged when the selector switch is in the AUTO

position.

4. Should any of the protective sensors on the generator activate, the engine control shall immediately shut down the engine.

C. The control panel shall include an emergency stop pushbutton. Arrange the controls to accept operation of a remote contact to provide for remote emergency stop. Emergency stop shall over-ride all other controls to immediately shut off the fuel supply and shutdown/stop the generator set concurrently with tripping open the generator circuit breaker.

D. Furnish a remote emergency stop switch mounted on the exterior of the generator enclosure in an easily accessible location as determined by the OWNER. The remote emergency stop switch shall be mushroom head type, housed in a NEMA 4X wall mount enclosure, permanently labeled as “Generator Emergency Stop”.

E. Provide automatic shutdowns with fault light alarm indicators for each of the following conditions:

1. High coolant temperature
2. Low coolant level
3. Low lubricating oil pressure
4. Engine overspeed
5. Engine overcrank
6. Over voltage
7. Emergency Stop

F. The controls shall include automatic pre-alarms for the following conditions with fault lights for each:

1. Low coolant temperature
2. Approach high coolant temperature
3. Approach low lube oil pressure
4. Switch not in AUTO position
5. Low battery voltage

6. Generator breaker tripped

7. Battery charger alarm

G. The control panel shall include an audible alarm horn to signal any of the alarm shut down or pre-alarm conditions. Alarms shall not reset and the alarm horn shall not shut off until manually acknowledged, and fault lights shall not reset until the fault is resolved. Provide lamp test pushbutton and alarm acknowledge pushbutton.

H. Arrange the control panel to accept remote dry contact closure for generator circuit breaker tripped alarm and battery charger failure alarm; display the alarm condition as an individual labeled alarm on the alarm panel; and include the alarm condition in the remote common pre-alarm output.

I. The controls shall include one normally open and one normally closed electrical relay dry contact rated 10 amperes at 120 volts A.C., for operation of a remote alarm on activation of any one or more of the pre-alarm conditions listed above, and shall include one normally open and one normally closed electrical relay dry contact, rated 10 amperes at 120 volts A.C., for operation of a remote alarm on activation of any one or more of the shut-down conditions listed above.

J. The control panel shall include three sets of normally open/normally closed dry contacts, rated 10 amperes at 120 volts A.C. that shall activate upon engine run.

K. Arrange the generator control panel for the following field wiring connections. Provide numbered terminal strip connections for each.

1. Remote start/stop - dry contact closure input from the automatic transfer switch - battery voltage pair

2. Remote emergency stop - dry contact open input from the remote emergency stop station – battery voltage pair.

3. Generator breaker open - dry contact closure input from the generator main breaker –battery voltage pair.

4. Engine run - three dry contact open/close output from the generator control panel for remote connection – 120 Volt pairs

5. Generator shut-down alarm – dry contact open/close output from the generator control panel for remote connection – 120 Volt pair

6. Generator trouble alarm – dry contact open/close output from the generator control panel for remote connection – 120 Volt pair.

7. Battery charger fault – dry contact closure input from the battery charger – battery

voltage pair.

8. Generator control switch in remote – dry contact closed when Auto/Manual switch is in the Remote position

2.06 ALTERNATOR AND EXCITATION SYSTEM

A. The alternator shall be of the open drip-proof bracket type, especially designed for connection to the engine and shall be for the power output characteristics as described herein, designed to start and operate the specified loads. The alternator shall have Class H insulation with a temperature rise in accordance with NEMA MGI-22.40 under full rated load operation. The alternator shall have Amortisseur windings.

B. The alternator shall be as manufactured by Caterpillar/Olympian. It shall have a forged or cast alloy steel flanged shaft for direct connection through a flywheel type coupling or adapter and disc coupling to the engine, and shall be of the single bearing type with anti-friction bearing.

C. Brace the alternator windings to withstand any possible short circuit stresses. The windings shall withstand overheating or stresses caused by harmonics generated by pulse width modulated variable frequency drives and solid state starters. The alternator shall be "Radio Interference Proof" (RIP) and the "Telephone Influence Factor" (TIF) shall be within the limits of Section 9, ANSI C50.12.

D. The alternator shall be brushless with a rotating permanent magnet generator type excitation system with Class H insulation.

E. The alternator shall include a complete voltage regulating system that shall hold the alternator voltage output within the limits specified herein. The voltage regulator shall be solid state digital (Volts/Hz) with RFI filters and associated controls. The voltage regulator shall provide regulation within 0.25 percent no load to full load, with temperature drift of not more than 0.5 percent. The regulator shall maintain precise control of the alternator output with up to 20 percent harmonic distortion in the output voltage. Provide means in the control panel for a minimum of plus or minus five percent manual voltage adjustment while the unit is running.

F. The alternator stator core shall be 2/3 pitch, built of low carbon steel laminations, precision-punched, deburred and individually insulated. Insert the stator coils into insulated core slots. Wound core shall be vacuum impregnated with fungus resistant thermosetting synthetic varnish and baked for maximum moisture resistance, high dielectric strength and high bonding qualities. Armature lamination followers and frame ribs shall be welded integral with frame. Enclosure shall be drip-proof guarded and shall include rodent screens.

G. Alternator rotor poles shall be of individually insulated steel punchings. Poles shall be vacuum impregnated with fungus resistant thermosetting synthetic varnish and baked

for maximum moisture resistance, high dielectric strength and high bonding qualities. Braze cage connections for strong construction and permanent electrical characteristics. Bolt each pole to the rotor shaft

H. Provide a directional blower on the alternator shaft to draw cooling air from the exciter end, over the rotor poles and through louvered openings in the drive end.

I. The alternator shall have a permanently lubricated anti-friction bearing. The designed bearing life, based on the B-10 curve of the American Bearing Manufacturers Association, shall be not less than 40,000 hours.

J. Provide an automatic thermostatically controlled space heater rated 120 volt, single phase power supply to maintain not less than 32 degrees C temperature within the alternator enclosure with an outdoor ambient temperature of minus 23 degrees C to prevent the accumulation of condensation within the alternator enclosure under outdoor ambient conditions. Provide a grounded plug to connect to a 120 Volt receptacle or terminate the heater connection wiring in a junction box including a separate manual disconnect switch when the heater is not required for field wiring connection by the installing CONTRACTOR.

K. The alternator shall include a NEMA I terminal box, sized to NEC clearances, and located to provide convenient arrangement inside the enclosure for access to the circuit breaker and wiring terminations. Provide potential transformers and current transformers in the terminal box for on board monitoring of generator output voltage and current.

L. At any balanced load between 75 and 100 percent rated output, the difference in line-to-neutral voltage among the three phases shall not exceed one percent of the average line-to-neutral voltage. Under an unbalanced load, consisting of 25 percent load at 1.0 power factor placed between any phase and neutral and zero load on each of the other two phases, the maximum simultaneous difference in voltage between the three line-to-neutral phases shall not exceed three percent of rated line to neutral voltage.

2.07 GENERATOR MAIN CIRCUIT BREAKER

A. Furnish one molded case, three pole, circuit breaker for three phase overloads and/or short-circuit protection. Current ratings shall be as required to protect the generator unit from overload or short circuit and shall be as shown on the Electrical Drawings. The circuit breaker shall operate either manually or electrically for normal switching functions and automatically during overload and short-circuit conditions. Circuit breaker shall be UL listed and rated per NEC requirements to carry the full ampere load of the generator. A manually actuated circuit breaker shall include contacts wired to the generator control panel to provide alarm if the breaker is in the “Tripped” or “Off” position. The short circuit rating of the generator circuit breaker shall be not less than 42,000 Amps RMS symmetrical.

1. The molded case circuit breaker shall provide inverse time and instantaneous tripping characteristics, shall be listed per UL 489 for applications at 100 percent of its continuous ampere rating in its installed enclosure.

2. The trip mechanism shall be quick-make, quick-break, mechanically trip-free over-center switching mechanism operated by a toggle-type handle. Handle shall indicate breaker position. A push-to-trip button mounted on the front of the circuit breaker shall provide a local manual means to exercise the trip mechanism.

3. Trip units shall be adjustable, microprocessor-based, electronic overcurrent trip device with true three phase RMS sensing of sinusoidal and non-sinusoidal currents, with the following minimum features and functions:

    a. Adjustable rating plugs interlocked so they are not interchangeable between frames, and interlocked such that a breaker cannot be closed and latched with the rating plug removed.

    b. Trip mode indicators for ground fault, overload and short circuit.

    c. An operator interface display panel showing diagnostic information and metering information.

4. Provide means to apply a padlock to lock the circuit breaker in the “OFF” position.

2.08 SOUND ATTENUATED WEATHERPROOF HOUSING

A. Enclose the skid mounted generator unit, battery, battery charger, and exhaust silencer in a factory manufactured sound attenuated weather protected skin tight enclosure designed to meet the conditions set forth below. The enclosure shall comply with the National Electrical Code (NEC), and the National Fire Protection Association (NFPA) for clearance around electrical equipment as specified. The enclosure shall conform to the following design criteria:

    1. Rigidity wind test equal to 115 mph

    2. Roof load equal to 50 lbs per sq. ft.

    3. Rain test equal to 4-in per hour

    4. The enclosure shall bear a label certifying compliance with UL 2200.

B. The enclosure shall have an interior width as required to provide minimum clearances on the sides and end of the generator set. The enclosure shall provide for continuous, unobstructed access on the two sides of the generator. The dimensions of the enclosure shall be such as to provide space for and NEC clearances for the generator set, the

generator circuit breaker, and the generator control panel.

C. The enclosure shall be of lift-off design, consisting of a roof, walls, louvers, and hoods/baffles of frameless panel construction epoxy powder coated steel sheet minimum thickness of 0.080-in. All fasteners shall be concealed stainless steel self-tapping screws. Camber the roof to aid in rain run-off. Provide insulation in the walls and roof as required to meet the specified noise limitation criteria specified herein. Color shall be manufacturer's standard. Submit available color options.

D. The base and underframe shall consist of two wide flange "I" beam or channel longitudinal skids, with fabricated steel crossmembers. Overlay crossmembers with 1/8-in thick steel plate welded to the crossmembers to provide a solid floor. A 3/4 inch pressure treated wood subfloor may be used between the crossmembers and the steel deck to provide further sound attenuation and for acoustic isolation of the generator and base assembly. Provide mounting to attach the lift-off enclosure to the base. Provide steel tapping plates coordinated with the generator set manufacturer, for anchoring the equipment within the enclosure. Provide floor openings for electric conduit stub-up where required for conduit wiring access to the equipment within the enclosure. The floor shall incorporate a diked perimeter to form a containment area for spilled fluids such as coolant and lubricating oil. The diked volume shall be at least 150 percent of the greatest fluid volume contained within the engine. The dike shall have steel edges welded and/or caulked to the floor. The conduit stub-up and any other floor penetrations shall be diked. The diked area may form the containment within

itself, or it may slope and drain to a storage volume. All portions of the diked area shall be accessible for cleaning without removing covers or floor plates.

E. Provide four-point lifting lugs at or near the corners of the enclosure base, with capacity for rigging the entire assembly. Provide two electrical grounding lugs mounted on the base for connection of the grounding system.

F. Provide access doors on each side of the enclosure of sufficient quantity and opening to provide full access to each side of the generator set for maintenance and NEC required access and clearances to the generator circuit breaker. Doors shall consist of a steel frame with skin material matching the enclosure. Doors shall be fully gasketed to form a weathertight perimeter seal and include interior insulation the same as the wall insulation. Hinges shall be forged aluminum or stainless steel with stainless steel pins. Door handles/latches shall be of stainless steel, shall firmly latch the door closed, and shall incorporate means to apply a padlock. Doors shall provide a full 180 degree swing to provide unobstructed access to the enclosure interior when open. Provide a stainless steel hold-open latch on each door.

G. Air handling during operation of the generator set shall be as follows: Air shall enter the enclosure through a louver, flow past the alternator and engine, pass through the radiator fan and radiator, and discharge through a louver. The system shall not exceed 0.5 inch w.g. total external static pressure to ensure adequate airflow for cooling and

combustion. Louvers shall be of formed and extruded steel and shall be screened with stainless steel coarse mesh screen. Louvers shall incorporate hoods or baffles as required to provide the specified sound attenuation.

H. The enclosure shall include hardware to internally mount the specified exhaust silencer and maintain the weatherproof integrity of the system.

I. Power supply for the jacket water heater, alternator space heater, battery charger, and one duplex grounded ground fault protected convenience outlet shall be hard wired by separate power supplies from a remote circuit breaker panel. Provide conduit and wire for these units to junction boxes for field wiring connection of AC service power by the installing CONTRACTOR. Furnish a four gang GFCI outlet box located to power the jacket heater, battery charger, and battery heater and for easy accessibility for use with portable equipment with conduit and wire extending to the junction box. All wiring shall be XHHW type and shall run within galvanized rigid steel conduit.

J. All openings in the enclosure shall be screened, baffled, or otherwise closed to prevent the entrance of insects and rodents.

K. The housing shall have signs on all four sides of the enclosure reading "Danger-High Voltage".

L. It is the intent of this specification to provide complete compliance with all applicable codes, laws and regulations.

2.09 AUTOMATIC TRANSFER SWITCH

A. Furnish, install, test and place into operation the automatic transfer switch with features, accessories and enclosure as specified herein. Automatic transfer switches shall be rated for [___] amperes, 480 volts, 3 phase, 3 wire, 65,000 A withstand/closing rating. The automatic transfer switch shall consist of an inherently double throw, 3 pole power transfer switch unit and a controller interconnected to provide complete automatic operation, and shall have three-position operation: closed to normal source, open, closed to standby source. Time delay between opening of the closed contacts and closing of the open contacts shall be a minimum of 400 milliseconds to allow for voltage decay before transfer is complete.

B. Submit shop drawings and product data as follows:

1. Equipment outline drawings and master drawing index showing elevation, plan and interior views, dimensions, weight, anchor bolt pattern and front panel layouts.

2. Provide a list of all options, special features and ratings.

3. Conduit entrance drawings.

4. Furnish complete Bill of Materials indicating manufacturer's part numbers.

5. Assembly ratings including short circuit rating, voltage and continuous current.

6. Cable terminal sizes.

7. Instruction and renewal parts books.

C. Quality Assurance

1. The automatic transfer switches shall be UL 1008 listed for use in standby systems in accordance with Sections 517, 700, 701 and 702 of the National Electrical Code.

2. The automatic transfer switch shall be certified to ISO 9001 International Quality Standard and the manufacturer shall have third party certification verifying quality assurance in design, development, production, installation, and servicing.

3. The automatic transfer switch shall be ASCO 300 Series or equal.

D. Features and Accessories

1. The following accessories shall be furnished:

a. An adjustable time delay of 0 to 30 seconds shall be provided to override momentary normal source outages and delay all transfer and engine starting signals, factory set at 3 seconds.

b. Adjustable time delay on retransfer to normal shall be provided. Time delay shall be automatically bypassed if the generator fails and the normal source is available. Time delay shall be field adjustable from 0 to 30 minutes. (Set at 30 minutes).

c. An unloaded running time delay for generator cool down shall be provided. Time delay shall be field adjustable from 0 to 60 minutes. (Factory set at 5 minutes).

d. A time delay on transfer to standby shall be provided, factory set at 5 seconds but field adjustable up to 5 minutes.

e. Auxiliary contact to close when normal fails (for engine start).

f. Close differential adjustable relay under voltage protection on all three phases of the normal and standby sources, set to drop out at 80 percent of rated voltage and pick up at 90 percent of rated voltage. Over voltage relay

protection shall drop out at 104 percent of rated voltage and pick up at 2 percent below trip.

g. Close differential adjustable relay under frequency sensing on all three phases of the generator source, set to drop out at 85 percent of rated frequency and pickup at 90 percent rated frequency. Over frequency relay protection shall drop out at 104 percent of rated frequency and pick up at 2 percent below trip.

h. Voltage unbalance relay shall be set to drop out at 5 percent and pick up at 1 percent below drop out.

i. Auxiliary Contacts

1) One to close when normal fails (Status to computer)

2) One to open on standby (Combustion air damper control)

3) One to close on standby (Status to computer)

4) One to close on standby (Generator Supplying Load)

5) One to open on standby (Spare)

6) One to close on normal (Status to computer)

7) One to open on normal (Spare)

j. A green pilot light to indicate when the automatic transfer switch is connected to the normal source. A red pilot light to indicate when the automatic transfer switch is connected to the standby source.

E. Enclosure

1. The automatic transfer switch shall be furnished with a NEMA 4X, 316 stainless steel enclosure.

F. Signage

1. The automatic transfer switch shall be furnished with a sign on all doors marked DANGER - 480 VOLTS - KEEP OUT. Letters shall not be less than 1-in high, 1/4-in stroke. Signs shall be laminated plastic, engraved white letters with a red background.

G. Field Testing

1. Perform the following minimum tests and checks on the automatic transfer

switch:

a. Megger incoming line terminals and buses, phase-to-phase and phase-to-ground after disconnecting devices sensitive to megger voltage.

b. Check polarity and continuity.

c. Check mechanical interlocks for proper operation.

d. Test ground connections for continuity and resistance.

e. Adjust unit doors.

f. Check control circuit interlocking and continuity. Provide external source of control power for this test.

g. Adjust timing devices to their correct settings.

h. Simulate power failure and demonstrate that the engine-generator automatically starts and the electrical load is transferred to standby power.

i. Simulate restoration of normal power.

2.10 SURFACE PREPARATION AND SHOP PAINTING

A. The engine driven generator set and associated equipment shall be shop primed and finished coated in accordance with the manufacturer's standard practice prior to shipment. Furnish an adequate supply of touch-up paint.

2.11 SHOP TEST

A. Shop test the complete engine driven generator unit and the generator control panel prior to shipment. Submit the complete certified test record. The tests shall demonstrate that the unit will operate successfully and meet the specified operational requirements. The manufacturer shall furnish all instruments, filters, fuel, electric power and load banks for the test.

B. The shop test shall include operation on a reactive load bank at 0.8 power factor at rated standby load. During operation, test and record voltage and frequency regulation, and voltage and current balance to confirm compliance with this specification. Perform tests to demonstrate transient response from zero load to full load, zero load to half load, and half load to full load. Test each of the automatic alarm and shut-down devices and record the settings at which the automatic devices actually alarmed and/or stopped the engine. Submit copies of the shop test record.

C. During the factory test, take readings and record results for each of the following:

1. Time
2. Ambient temperature.
3. Load:
    a. Volts [for each phase]
    b. Amps [for each phase]
    c. Kilowatts
    d. Frequency
    e. [Power Factor]
4. Engine jacket water temperature
5. Lubricating oil pressure

D. Shop test the alternator in accordance with IEEE Standard 115. Testing shall include the following:

1. Cold resistance of all windings
2. Insulation resistance of all windings
3. Polarity of field coils
4. High potential on all windings
5. Open circuit saturation

PART 3 EXECUTION

3.01 INSTALLATION

A. Provide the services of a factory field representative to check the installation of the generator unit and appurtenances, to ensure installation in accordance with the manufacturer's recommendations, perform check-out and start-up services, and conduct the field test.

B. Mount the generator enclosure skid base on a concrete foundation and level to provide equal bearing for all supports as work of this section. Utilize grout or other approved means to level the mounting surface of the foundation to provide equal bearing for all supports. Furnish and install anchors in accordance with the submitted foundation design. Connect the unit to field wiring and to fuel supply piping.

C. Installation shall include furnishing all required coolant and lubricants in accordance with the manufacturer’s recommendations.

3.02 EQUIPMENT START-UP

A. After installation and manufacturer's representative check of the installed equipment, operate the unit to demonstrate its ability to operate continuously without vibration, jamming, leakage or overheating and to perform specified functions.

B. Comply with manufacturer's operating and maintenance instructions during start-up and operation.

C. Promptly correct improper installation of equipment.

D. Cooperate with supplier of equipment at time of start-up and in making of all final adjustments necessary to place equipment in satisfactory working order. Start-up shall not commence without the presence of the manufacturer's representative.

3.03 FIELD TEST

A. Upon completion of installation and as soon as conditions permit, test the generator unit, controls, and appurtenances for acceptance, including load bank testing and operation under actual operating conditions, to demonstrate that operation is satisfactory. Before conducting the on-site field tests, submit a copy of the proposed field test log sheet. Prior to scheduling the test, notify the Engineer in writing that all requirements and provisions of the Contract Documents have been fulfilled, that all apparatus has been cleaned, properly adjusted, and is ready for operation, and that the Operation and Maintenance manuals have been submitted. Perform testing in the presence of the Engineer.

B. The test shall consist of four hours of continuous operation of the engine driven generator unit at unity power factor using a temporary portable resistive load bank. Load shall be adjusted, starting with half hour intervals each at 1/4 load, 1/2 load, and 3/4 load followed by the remaining time at full load. Furnish the load bank plus all connecting cables, metering equipment, and other equipment or devices required, and fuel to perform the load bank testing. During the test, take and record the same readings as outlined under Shop Test, at fifteen minute intervals.

C. As part of the field test, test each of the automatic alarm and shutdown devices and record the respective values at which the devices will alarm and/or stop the engine. Perform any adjustments required in the alarm settings to make the operating values correspond to those recommended by the engine manufacturer and as recorded during the shop test. Verify that each alarm point activates the designated remote alarm contact and that the monitoring and alarm connections to the SCADA system will activate the corresponding indications at the SCADA panel. Test the remote emergency stop. Testing shall include verification of proper voltage regulation,

transient voltage dip and recovery time, and voltage and current balance.

D. After the load bank test has been completed, connect the generator to the facility load, and perform additional testing utilizing the main circuit breaker to simulate a utility power failure, to demonstrate the generator unit's ability to meet the automatic starting, load transfer, and motor starting requirements as specified herein, utilizing facility load as available. Operate the facility on generator power for at least 30 minutes then restore utility power via the main circuit breaker, to cause the transfer switching to reset and shut down the generator. Record generator operating parameters as specified above.

E. Provide a person qualified to conduct sound pressure level testing, and test instrumentation, to take and record octave band sound pressure level readings at the time of the on-site field test, when operating the generator at maximum available station load (no load bank operation). The sound pressure readings shall be within the limits permitted by this specification. If changes are necessary to accomplish the required silencing, perform revisions as required and retest.

F. If the standby power supply system fails to fulfill the requirements of this specification, perform corrections and retest the system to assure full compliance at no additional cost to the Owner.

3.04 TRAINING

A. The equipment manufacturer shall furnish the services of a factory representative who has complete knowledge of proper operation and maintenance for a minimum of one, eight hour working day to instruct representatives of the Owner and the Engineer in the proper operation and maintenance of the equipment.

B. Training shall be provided at the site and timed to accommodate all working shifts, including some late evenings, and early mornings. The instruction period shall be scheduled at least ten working days in advance with the Owner and shall take place prior to start-up and acceptance of the equipment by the Owner. Training shall include system operations, preventive maintenance, and troubleshooting.

C. Submit, at least 30 working days prior to the start of training, a training syllabus that includes the above requirements, proposed dates and times for training, and instructor resume. Training may not commence until the first draft of the O&M manual has been submitted for review.

END OF ATTACHMENT B

3.3.10 Attachment C: Remote Telemetry Unit, Instrumentation and SCADA System Interface

ATTACHMENT C
REMOTE TELEMETRY UNIT, INSTRUMENTATION AND SCADA SYSTEM INTERFACE

PART 1 GENERAL

1.01 SCOPE OF WORK

A. The Contractor shall utilize the services of the pre-selected Instrumentation and Control System Integrator to furnish a new remote telemetry unit (RTU), instrumentation and control devices, and system integration of the new RTU into the City's existing SCADA system. Primary components of this system shall include:

B. The new RTU will monitor the new Pump Control Panel via hardwired I/O and serial or Ethernet communications as specified below The RTU shall include a programmable logic controller (PLC), communications devices (radio, cellular and/or fiber optics), and other ancillary components as required to interface to the City's existing supervisory control and data acquisition (SCADA) system

C. Communication shall be by cellular unless cellular communication is unavailable on the site.

D. If radio communication is utilized, the new RTU will communicate with the existing SCADA system using the Owner's existing radio telemetry infrastructure. . If required, a wooden pole or galvanized steel antenna tower shall be supplied to mount an antenna to a height sufficient to attain a received signal strength indication (RSSI) at the site of at least -90 dBm.

E. Programming for the human machine interface (HMI) software and PLC-based RTU shall follow the Metro Wastewater Treatment SCADA Standards and Conventions document.

1.02 DUPLEX PUMP STATIONS – LESS THAN 100 HP

A. For pump stations using motors of less than 100 horsepower, the following I/O originating in either the RTU or the Pump Control Panel shall be monitored by the SCADA system:

Digital Input #1:	Pump #1 - Run Status
Digital Input #2:	Pump #1 - In Auto
Digital Input #3:	Pump #1 – Failure/Thermal Overload Alarm
Digital Input #4:	Pump #2 - Run Status
Digital Input #5:	Pump #2 - In Auto
Digital Input #6:	Pump #2 – Failure/Thermal Overload Alarm

Digital Input #7:	High Wet Well Level Alarm
Digital Input #8:	Spare
Digital Input #9:	Low Wet Well Level Alarm
Digital Input #10:	Generator Run Status
Digital Input #11:	Generator Common Alarm
Digital Input #12:	Generator in Auto Mode
Digital Input #13:	Generator Emergency Stop
Digital Input #14:	Generator Supplying Load
Digital Input #15:	AC Power Surge Protection Device Failure
Digital Input #16:	Pump Control Panel AC Power Loss, Phase Failure, or Phase Reversal
Digital Input #17:	Automatic Transfer Switch Position (*See Note 1 below.*)
Digital Input #18:	Spare
Digital Input #19:	RTU Loss of AC Power
Digital Input #20:	RTU Door Open/Closed Status
Analog Input #1:	Wet Well Level
Analog Input #2:	Spare
Analog Input #3:	Spare
Analog Input #4:	Spare

Note 1: *The position of the Automatic Transfer Switch (ATS) is to be monitored for stations which have permanently installed generators.*

1.03 DUPLEX PUMP STATIONS – EQUAL TO OR GREATER THAN 100 HP

A. For pump stations using motors of equal to or greater than 100 horsepower, the following I/O originating in either the RTU or the Pump Control Panel shall be monitored by the SCADA system:

Digital Input #1:	Pump #1 - Run Status
Digital Input #2:	Pump #1 - In Auto
Digital Input #3:	Pump #1 - Failure/Thermal Overload Alarm
Digital Input #4:	Pump #2 - Run Status
Digital Input #5:	Pump #2 - In Auto
Digital Input #6:	Pump #2 - Failure/Thermal Overload Alarm
Digital Input #7:	High Wet Well Level Alarm
Digital Input #8:	Spare
Digital Input #9:	Low Wet Well Level Alarm
Digital Input #10:	Generator Run Status
Digital Input #11:	Generator Common Alarm
Digital Input #12:	Generator in Auto Mode
Digital Input #13:	Generator Emergency Stop
Digital Input #14:	Generator Supplying Load
Digital Input #15:	AC Power Surge Protection Device Failure
Digital Input #16:	Pump Control Panel AC Power Loss, Phase Failure, or

	Phase Reversal
Digital Input #17:	Automatic Transfer Switch Position (*See Note 1 below.*)
Digital Input #18:	Spare
Digital Input #19:	RTU Loss of AC Power
Digital Input #20:	RTU Door Open/Closed Status

Analog Input #1:	Wet Well Level
Analog Input #2:	Spare
Analog Input #3:	Spare
Analog Input #4:	Spare

Serial Input #1:	Pump #1 - Ground Current Fault
Serial Input #2:	Pump #1 - Thermal Overload Fault
Serial Input #3:	Pump #1 – Jam Fault
Serial Input #4:	Pump #1 - Current Phase Imbalance Fault
Serial Input #5:	Pump #1 - Overcurrent Fault
Serial Input #6:	Pump #1 - Current Phase Loss Fault
Serial Input #7:	Pump #1 – Motor Temperature Sensor Fault
Serial Input #8:	Pump #1 - Voltage Phase Imbalance Fault
Serial Input #9:	Pump #1 - Voltage Phase Loss Fault
Serial Input #10:	Pump #1 – Voltage Phase Reversal Fault
Serial Input #11:	Pump #1 – Undervoltage Fault
Serial Input #12:	Pump #1 - Overvoltage Fault
Serial Input #13:	Pump #1 – Overpower Fault
Serial Input #14:	Pump #1 – Controller Internal Temperature
Serial Input #15:	Pump #1 - Line 3 to Line 1 Voltage
Serial Input #16:	Pump #1 - Line 1 to Line 2 Voltage
Serial Input #17:	Pump #1 - Line 2 to Line 3 Voltage
Serial Input #18:	Pump #1 - Power Factor
Serial Input #19:	Pump #1 - Active Power
Serial Input #20:	Pump #1 - Reactive Power
Serial Input #21:	Pump #1 - Line 1 Current
Serial Input #22:	Pump #1 - Line 2 Current
Serial Input #23:	Pump #1 - Line 3 Current
Serial Input #24:	Pump #1 – Altistart Thermal Overload Alarm
Serial Input #25:	Pump #2 - Ground Current Fault
Serial Input #26:	Pump #2 - Thermal Overload Fault
Serial Input #27:	Pump #2 – Jam Fault
Serial Input #28:	Pump #2 - Current Phase Imbalance Fault
Serial Input #29:	Pump #2 - Overcurrent Fault
Serial Input #30:	Pump #2 - Current Phase Loss Fault
Serial Input #31:	Pump #2 – Motor Temperature Sensor Fault
Serial Input #32:	Pump #2 - Voltage Phase Imbalance Fault
Serial Input #33:	Pump #2 - Voltage Phase Loss Fault
Serial Input #34:	Pump #2 – Voltage Phase Reversal Fault

Serial Input #35:	Pump #2 - Undervoltage Fault
Serial Input #36:	Pump #2 - Overvoltage Fault
Serial Input #37:	Pump #2 – Overpower Fault
Serial Input #38:	Pump #2 – Controller Internal Temperature
Serial Input #39:	Pump #2 - Line 3 to Line 2 Voltage
Serial Input #40:	Pump #2 - Line 2 to Line 2 Voltage
Serial Input #41:	Pump #2 - Line 2 to Line 3 Voltage
Serial Input #42:	Pump #2 - Power Factor
Serial Input #43:	Pump #2 - Active Power
Serial Input #44:	Pump #2 - Reactive Power
Serial Input #45:	Pump #2 - Line 1 Current
Serial Input #46:	Pump #2 - Line 2 Current
Serial Input #47:	Pump #2 - Line 3 Current
Serial Input #48:	Pump #2 – Altistart Thermal Overload Alarm

Note 1: The position of the Automatic Transfer Switch (ATS) is to be monitored for stations which have permanently installed generators.

1.04 TECHNICAL SERVICES:

A. The Instrumentation and Control System Integrator shall provide both engineering and system integration services during the course of this project as described herein.

B. Provide all project management and system design services required to insure a fully functional SCADA system which meets the intended system functionality as described herein.

C. Prepare and submit detailed shop drawings as submittals for approval.

D. Develop and fully annotate all PLC programming. As-built PLC program and configuration files shall be furnished to the Owner in their native formats.

E. Develop and fully document all HMI applications software. As-built HMI program and configuration files shall be furnished to the Owner in their native formats.

F. Provide the onsite services of a factory trained field service engineer to startup, calibrate, and place into service all computer hardware, instrumentation, communication equipment, PLC-based control panels, and other ancillary devices and equipment as required to achieve a fully operational and functional system.

G. Provide the onsite services of a factory trained software engineer to startup the system and to work with the factory trained field service technician to thoroughly test the entire system. Results of all testing shall be documented in writing on a site by site basis, and record copies shall be furnished to the Owner.

H. Provide the onsite services of a factory trained field service technician to perform

training of personnel in the area of troubleshooting the specific equipment supplied.

I. Provide the onsite services of a factory trained software engineer to perform training of personnel in the area of the human-machine-interface (HMI) applications software as applied specifically to this system.

J. Provide the onsite services of a factory trained field service technician and factory trained software engineer to make repairs to the system during the one year warranty period.

1.05 QUALITY ASSURANCE:

A. The Instrumentation and Control System Integrator shall maintain a staff of service engineers and technicians that are full-time employees of the integrator and are headquartered within a 100-mile radius of the City of Columbia, South Carolina.

B. The Instrumentation and Control System Integrator shall provide or supply all testing, calibration, start-up, preparation of operation and maintenance manuals, and operator training specified herein, without additional cost to the OWNER.

C. The Instrumentation and Control System Integrator shall design and furnish a complete, integrated and functionally operating system warranted to perform the intended functions as herein specified.

D. The Instrumentation and Control System Integrator shall be a certified member of the Control System Integrator Association (CSIA).

E. The pre-approved Instrumentation and Control System Integrators are:

1. CITI, LLC, Charlotte, North Carolina.

2. MR Systems, Inc. with office in Charlotte, North Carolina.

F. Alternative suppliers must submit a minimum of three (3) references of projects of similar scope and size completed in the last five years, the name of the licensed Professional Engineer on staff who will seal the design, and the firm’s South Carolina Certificate of Authorization to practice consulting engineering in the State and a copy of their South Carolina Electrical Contractor’s License.

1.06 SUBMITTALS

A. Comply with other pertinent provisions of this specification.

B. Product data: Within 60 calendar days after the Contractor has received the Owner's Notice to Proceed, submit:

1. Component manufacturing data sheet indicating pertinent data and identifying

each component by item number and nomenclature as indicated on the drawings and in the specifications.

2. Component drawing showing dimensions, mounting and external connection details.

3. System wiring schematics, each on a single drawing with full description of operation. Component identification on the schematic shall be as indicated above.

4. A system schematic of the hardware with the component manufacturing data sheets for each item, including all system peripherals.

5. A printed copy of each control and monitoring screen and each regulator report form. A complete description of each screen shall accompany the print.

C. Provide Operation and Maintenance manuals.

1. Operating instructions shall incorporate a functional description of the entire system, including the system schematics which reflect “as-built” modifications.

2. Special maintenance requirements particular to the system shall be clearly defined along with special calibration and test procedures.

3. As part of the operation and maintenance manuals, provide three hard copies of the program used to program the programmable logic controller, fully commented and documented.

D. Purchase any and all software packages required for the system in the name of the Owner. All warrantees associated with the hardware and software shall be in the name of the Owner.

E. Provide to Engineer for approval any changes, additions, corrections, etc. required to the Bid Documents that are needed to accommodate the system being proposed. The changes, additions, corrections, etc. shall be at the Contractor's expense and shall be included in his Bid.

1.07 COORDINATION OF WORK

A. Coordinate work of this Section with work of other sections.

The Instrumentation and Control System Integrator shall be responsible for reviewing the contract documents that could affect this portion of the work.

B. Plans and specifications, especially instrumentation/electrical and wiring requirements, have been formulated in an attempt to satisfy the conditions for any system proposed. However, a vendor may find that some changes or additional conduit and wiring from that indicated may be required to accommodate particular

equipment being proposed. Should this be the case, the vendor shall include in his bid price, all changes or additional requirements necessary for the system. After award of contract, revised drawings must be submitted for approval indicating any changes prior to any changes being implemented.

1.08 PRODUCT DELIVERY, HANDLING AND STORAGE

A. Schedule the delivery of the equipment to coordinate with the project completion schedule. Each item of equipment to be tagged with identifying number shown on the Shop Drawings.

B. Contractor's attention is directed to the fact that equipment has delicate components and extreme care shall be taken in handling to avoid internal and/or external damages.

C. Damaged equipment will not be accepted.

D. Equipment not for immediate use shall be stored inside a building, with enclosures under protective coverings and shall be fully protected from moisture, extreme heat and vibration.

1.09 WARRANTY

A. Systems supplier shall furnish a hardware and software maintenance contract for the computer system, providing a response 24 hours a day, 7 days a week, 365 days a year, for the length of the one (1) year warranty period, from written acceptance.

1. For any service visit during this period, provide the Owner and Engineer with a written report stating the reason for equipment failure and recommendations to prevent recurrence.

B. At the end of this period, the maintenance contract shall be made available for transfer to the Owner.

PART 2 PRODUCTS

2.01 GENERAL

A. The total control and monitoring system shall consist of a series of individual control and monitoring sub-systems, each configured to perform a specific function associated with the total plant operational scheme.

B. All equipment and materials shall be new, unused and proved by previous use of similar products to be completely suitable for the service intended.

C. All of the equipment shall be the manufacturer’s latest and proven design. Specifications and drawings call attention to certain features but do not purport to cover all details entering into the design of the SCADA system. The completed

system shall be compatible with the functions required and other equipment furnished by the Contractor.

D. All electrical components of the system shall be powered by 120V, single phase, 60 cycle current, except as otherwise indicated or specified.

E. All contacts for control, remote motor operated, or electrically operated equipment shall be rated not less than 10 amperes on 120V unless otherwise specified herein.

F. All systems and individual components, whether panel or field mounted units, shall be protected from voltage and/or current surges which may originate as a result of lightning or other external causes.

1. Protective equipment to be provided by the Instrumentation and Control System Integrator and installed in accordance with his recommendations.

2. Schematics of the instruments submitted for approval to the Engineer shall indicate how this protection will be provided and identify the items of equipment which shall be used for this purpose.

G. System manufacturer to supply “as-built” drawings containing all necessary information for proper maintenance and operation of the system.

1. Wire log table showing connections (wire terminations) between all furnished components to be supplied to facilitate field wiring.

2. Interconnection information between system components and equipment found in other sections of these Specifications shall be complete with all necessary interconnection information.

3. Notes which refer to equipment manufacturer’s drawings for proper interconnection will not be acceptable.

4. Provide within 30 days after startup and after any field modifications.

2.02 PLC-BASED REMOTE TELEMETRY UNITS (RTUs)

A. General: Each PLC-based Remote Telemetry Unit (RTU) shall be comprised of a programmable logic controller (PLC) with radio, modem, or fiber transceiver, surge arrestors, relays, power supplies, terminal strips, solar shields, heater and thermostat, circuit breakers, utility light, GFI utility outlet, enclosure, and other appurtenances as required for a fully functioning and fully operational system.

B. Enclosure

1. The programmable logic controller (PLC) and associated required components shall be housed in a metallic enclosure and shall be constructed in accordance

with the following requirements.

2. Materials of Construction and Rating for Outdoor Panels: For panels mounted outdoors, the RTU enclosure shall be constructed of #304 stainless steel unless otherwise noted and shall meet or exceed the NEMA 4X rating. Access doors shall have continuous stainless steel hinges and approved latching. Internal bracing shall be supplied as required for rigidity. Provide 3-point padlockable door handle.

    a. Solar Shields: For panels mounted outdoors, each RTU enclosure shall be provided with top, front, and side solar shields. Solar shields shall be constructed of aluminum and shall be painted white.

    b. The top solar shield shall overhang the side solar shields.

    c. Four (4) 1½" long by ¼" diameter weld studs shall be stud-welded to the RTU enclosure for each solar shield.

    d. For sites which will have a canopy covering the RTU panel only a front solar shield will be required.

3. Materials of Construction and Rating for Indoor Panels: For panels mounted indoors, the RTU enclosure shall be constructed of painted carbon steel unless otherwise noted and shall meet or exceed the NEMA 4 rating. Access doors shall have continuous stainless steel hinges and 3-point latch. Internal bracing shall be supplied as required for rigidity.

4. Heat Load Calculations: The Instrumentation and Control System Integrator shall perform heat load calculations and will insure that the enclosure is properly sized to allow for adequate cooling.

5. RTU Door Open/Closed Limit Switch: A single pole double throw (SPDT) limit switch shall be mounted on the door of the RTU enclosure. When the RTU door is open (i.e. "normal" state), the normally closed contact of the limit switch will be wired to operate the RTU LED utility light. When the RTU door is closed, the normally open contact of the limit switch will "make" to generate an "RTU Door Closed" signal directly wired to one of the PLC's digital inputs.

6. Heater and Thermostat: An electronic heater and thermostat shall be supplied inside each RTU enclosure to prevent condensation.

7. Corrosion Protection: Anti-corrosion inhibitor blocks shall be mounted inside each RTU enclosure to reduce corrosion. Corrosion inhibitors shall be Hoffman Model A-HCI10E or equal.

8. Utility Light: An LED linear light bar fixture shall be mounted to the top inside of

the RTU panel using stud welds. When the RTU door is opened, the LED utility light will be switched on by the SPDT door limit switch specified above.

C. Power Distribution

1. AC Power Surge Protector: An Edco AC power surge protector shall be installed integral to the RTU to provide transient and surge protection for incoming AC power.

2. Circuit Breakers: Two (2) circuit breakers shall be provided integral to the RTU panel. One circuit breaker shall provide branch circuit protection for the RTU's internal DC power supplies. The second circuit breaker shall provide protection for the duplex GFI utility outlet specified below.

3. Duplex GFI Utility Outlet: A separate duplex GFI utility outlet, protected by the AC power surge protector and a circuit breaker, shall be installed in the RTU enclosure to provide AC power for test equipment or other uses.

   Uninterruptible Power Supply (UPS): The RTU must remain powered for a limited time in the event of commercial AC power failure. A 120VAC UPS unit shall be provided in accordance with UL requirements. Furnish the APC BE750G

4. DC Power Supplies: All DC power supplies shall be protected via indicating 3 AG size fast acting fuses. Indicating fuse holders shall be utilized and shall be DIN-rail-mounted.

D. Programmable Logic Controller and I/O

1. Programmable Logic Controller: Provide one (1) Allen-Bradley MicroLogix 1400 programmable logic controller (#1766-L32AWA).

2. Minimum I/O Complement: As a minimum, the PLC supplied for each RTU shall support the following minimum available I/O complement: 16 digital (120VAC discrete) inputs, 4 analog inputs (4-20 mA or 1-5 VDC). Analog input module #1762-IF4 shall be used. Actual I/O shall be supplied in accordance with the table included herein.

3. Digital Input Signal Surge Protection: All PLC digital inputs, including spare digital inputs, shall be individually fused. A minimum of four (4) spare digital inputs shall be provided and fully wired to accommodate utility signals such as AC power failure and RTU door open/closed.

4. Analog Input Signal Surge Protection: Each PLC analog input, including spare analog inputs, shall be protected from field generated current or voltage transients or surges using 3-stage surge/transient suppression devices. The first level of protection shall be via a 1/4 Amp 3AG size fast acting fuse. Secondary and

tertiary protection shall be fulfilled using a combination of a three terminal gas discharge tube and a metallic oxide varistor (MOV) surge protector with current limiting resistors. Analog signal surge protectors shall be Phoenix Contact or equal.

5. Field Wiring Terminations: All field wiring terminations for digital signals shall be made to terminal strips capable of accommodating up to #12 AWG wire. Terminal strips shall be mounted using DIN rails. Acceptable terminal strips shall be manufactured by Weidmuller, Phoenix Contact, Allen-Bradley, or Square D. Factory-printed wire labels shall be used to identify the panel terminal number for each field wire terminated in the panel.

E. Communications:

1. The RTU shall support the following communications hardware. The specific communications supplied shall be based upon the results of a radio path analysis performed by the Instrumentation and Control System Integrator and his subsequent recommendation.

   a. Primary communication method (Cellular):

      i. Cellular Modem: Sierra Wireless (Verizon)

      ii. Cellular Router: Mikrotik RB/750 or approved equal.

      iii. Cellular Antenna: Furnish and mount an antenna as required to achieve -80dB or better signal strength.

   b. Secondary communication method (Radio): GE iNet-II or GE SD9, 900MHz.

2. Communications Protocol: The RTU shall be capable of communicating with the SCADA system using the following industry standard communications protocols: Modbus Serial or RTU, Modbus TCP/IP, or Ethernet/IP.

3. RF Surge Protector: For RTUs utilizing a radio, provide one (1) bulkhead mounting RF Surge protectors mounted in the bottom of the RTU enclosure. This device will provide voltage and current transient and surge protection for the radio signal from the antenna and will also facilitate conversion of the antenna feedline cable to the RTU panel.

4. RF Jumper Cable: For RTUs utilizing a radio, provide and install one (1) superflex RF jumper cable between the RF surge protector bulkhead adapter and the radio.

F. Options:

1. Where identified herein provide one or more of the following options.

   a. Ethernet switch, unmanaged.

   b. Ethernet switch, managed.

   c. Other custom or special options as identified herein or as shown on the contract drawings.

2.03 DIRECTIONAL (YAGI) ANTENNA FOR RADIO COMMUNICATION

A. For remote sites which shall communicate via 900 MHz radio, provide and install Yagi antennas as specified below.

Frequency Range	890 to 960 MHz
Nominal Gain	10 dB, minimum (RSSI to be -90 dB or better)
Maximum Power Input	100 watts
Nominal Impedance	50 ohms
Radiator Material	Aluminum 6061-T6
Mounting Method	Clamp Set
Rated Wind Velocity	150 mph
Wind Loading	0.71 square feet
Overall Length	5 feet
Connector Type	N female

B. Yagi antennas shall be Laird Technologies Model Y1505.

2.04 RF TRANSMISSION CABLE

A. The transmission cable connecting the radio transceiver with the antenna shall be a low-loss foam-dielectric type. Coaxial cable shall be sized upon the distance of cable run between radio and antenna in accordance with the following table:

Distance	Cable Type
0 to 100 feet	½” Foam CELLFLEX
100 to 225 feet	7/8” Foam CELLFLEX Ultra-flexible
225 to 350 feet	1-1/4” CELLFLEX Premium Attenuation Cable

B. Provide two (2) Andrew ground strap kits to match coaxial cable size and Andrew cable hangers as required. Install one ground strap just below the antenna at top of mast and one ground strap at bottom of mast.

C. Provide a six-foot section of "super-flex" transmission cable at the radio antenna port. Make this section pass through the enclosing panel and the control building exterior wall. Provide standard Type N connectors for connection to a continuous piece of cable extending to the antenna. Provide weatherproof transmission cable, suitable for direct environmental exposure. Use "O" ring seals on connections. The System shall utilize appropriate bulkhead RF transmission cable surge suppression devices at cable entrances, Phoenix Contact, Polyphaser, or equivalent.

2.05 Bulkhead-mounted RF Surge Protector and RF Surge Protector Enclosure

A. Provide one bulkhead-mounted Phoenix Contact CoaxTrab RF Surge Protector mounted in the bottom of the RTU enclosure. This device will provide a weather proof termination for the antenna feedline to the RTU. The Instrumentation and Control System Integrator shall securely waterproof this connection using weatherproof heat-shrink product suitable for outdoor exposure.

B. Provide an RF Surge Protector Enclosure consisting of a Phoenix Contact CoaxTrab RF surge protector housed in a NEMA 4X polycarbonate enclosure with ground bus bar.

C. The RF Surge Protector Enclosure shall be mounted at the base of the antenna pole or tower and shall be bonded to the system ground of the pump station.

2.06 ANTENNA MOUNTING POLES OR TOWERS

A. For an antenna mounted less than 52 feet above grade a wooden pole may be supplied.

B. For an antenna mounted more than 52 feet above grade a galvanized antenna tower shall be supplied.

C. Provide grounding in accordance with NEC 2008 requirements. This includes bonding of the antenna ground to the system ground of the pump station. The grounding conductor shall be #6 AWG solid copper minimum.

D. Run the coaxial antenna cable on the opposite side of the antenna structure from the ground conductor.

E. Each wooden utility pole shall be treated with Pentachlorophenol wood preservative. All utility poles shall adhere strictly to AWPA Standards to provide quality controlled pressure treated wood.

F. Provide a 2” galvanized mast for each antenna pole.

G. Provide grounding kits and other required accessories as required for a neat and professional installation.

H. Utility poles shall be supplied and installed for the various locations as identified in

the Telemetry System

2.07 COMPUTERIZED RADIO PATH ANALYSIS AND ONSITE RADIO TESTING

A. When radio communication is to be used, the Instrumentation and Control System Integrator shall perform a computerized radio path analysis to determine whether radio communications are feasible between the new facility and the Owner's existing radio telemetry system.

B. The design goal is for the received signal strength indication (RSSI) to be better than -90 dBm at the new facility.

C. If the results of the Computerized Radio Path Analysis are marginal (i.e. not less than -90 dBm when foliage is considered) then the Instrumentation and Control System Integrator shall perform an onsite radio test using a bucket truck to verify the height of antenna required to achieve the minimum RSSI of better than -90 dBm.

D. If the results of both the Computerized Radio Path Analysis and the Onsite Radio Testing indicate that an acceptable RSSI (better than -90 dBm) cannot be achieved with an antenna height at the new station of no greater than 80 feet, the Owner and Engineer, working with the Instrumentation and Control System Integrator, will identify an alternative means of communications. Such alternatives may include an antenna mast or tower greater than 80 feet in height, cellular communications or other alternatives. Additional costs for the selected alternative shall be borne by the Owner.

PART 3 EXECUTION

3.01 SURFACE CONDITIONS

A. Examine the areas and conditions under which work of this Section will be performed. Correct conditions detrimental to timely and proper completion of the work. Do not proceed until unsatisfactory conditions are corrected.

3.02 INSTALLATION

A. Coordinate as required with other trades to assure proper and adequate provision in the work of those trades for interface with the work of this Section.

B. Install the work of this Section in strict accordance with the original design and the manufacturer's recommended installation procedures as approved by the Engineer, anchoring all components firmly into position for long life under hard use.

C. Perform all wiring.

1. Final connections and/or terminations for all 120 volt and higher power wiring indicated on the electrical drawings and in this division of the specifications shall

be made by the electrical contractor unless otherwise noted.

2. Final connections and/or terminations for all signal, data and low voltage control wiring indicated on the electrical drawings and in this division of the specifications (shielded cable, fiber optic cable and #14 AWG wiring) shall be made by the appropriate system or equipment vendor or integrator unless noted otherwise.

3. Equipment supplied under other divisions of the specifications that require electrical connections under this division shall be provided with Engineer approved wiring and termination diagrams.

3.03 APPLICATIONS SOFTWARE DEVELOPMENT

A. The existing Wonderware InTouch application shall be modified as required to include 3-D graphics displays for each new or improved remote site. Reports, graphics displays, real-time trends, historical trends, security, and alarming shall be developed or modified by the Instrumentation and Control System Integrator via a collaborative effort including the Engineer and Owner. Graphics displays shall be designed by the Instrumentation and Control System Integrator for each new or improved remote site.

B. Graphics displays shall be fully colorized representations of the various plant facilities and shall be based upon plan and elevation representations of the facilities taken from AutoCad drawings provided by the Owner/Engineer.

C. Screen development and attribute names shall comply with the Metro Wastewater Treatment SCADA Standards and Conventions document.

3.04 GRAPHIC DISPLAY DESIGN MEETING AND SUBMITTALS

A. A two (2) hour graphic display design meeting shall be held with the Engineer and Owner’s personnel to discuss specific details of overall design of the graphic displays including discussions of the particular signals which are to be displayed on each graphic display.

B. Prior to the meeting the instrumentation and control system vendor shall submit detailed sketches of the proposed graphics displays to the Engineer for review.

C. This meeting can be conducted via conference call or onsite at the Owner’s or Design Engineers Office.

3.05 PROCESS CONTROL STRATEGY DESIGN MEETING AND SUBMITTALS

A. A two (2) hour process control strategy design meeting shall be held with the Engineer and Owner’s personnel to discuss specific details of the control strategies which are to be developed for the system.

B. Prior to the meeting the instrumentation and control system vendor shall submit a detailed narrative for each of the proposed control strategies to the Engineer for review.

C. This meeting can be conducted via conference call or onsite at the Owner's or Design Engineers Office.

3.06 REPORT DEVELOPMENT DESIGN MEETING AND SUBMITTALS

A. A two (2) hour report strategy design meeting shall be held with the Engineer and Owner's personnel to discuss specific details of integration of RTU data into HACH WIMS.

B. This meeting can be conducted via conference call or onsite at the Owner's or Design Engineers Office.

3.07 PLC APPLICATION DEVELOPMENT

A. The Instrumentation and Control System Integrator will coordinate with the Owner and Engineer to develop the following PLC application features for interface with the SCADA system.

1. Estimated inflow calculations.

2. Pump draw down estimates for each cycle of each pump.

3. Elapsed run time and start counter calculations for each pump. These values shall be displayed in the SCADA graphic display screens.

4. Other features as desired by the Owner.

B. PLC naming conventions and program elements shall comply with the Metro Wastewater Treatment SCADA Standards and Conventions document.

3.08 SPARE PARTS

A. Provide qty.(5) fuses of the type used for digital inputs.

B. Spare parts shall be delivered to the owner at time of final acceptance and before final payment.

3.09 TRAINING

A. System supplier to provide operation and maintenance training for Owner's personnel to ensure their adequate knowledge of use of the system.

B. Training to be conducted on-site by instructors thoroughly familiar with operation of

the system, with training divided into three general areas as follows:

1. Analog and digital hardware maintenance training:

    a. Instruct Owner's maintenance personnel in the proper preventative maintenance and repair tasks associated with system maintenance.

    b. For analog instrumentation, include detailed instruction of calibration and checking along with familiarization training for basic repair and maintenance tasks that are expected to be encountered.

    c. For computer hardware maintenance, include general familiarization with computer hardware and peripheral devices with instruction is preventative maintenance tasks associated primarily with peripheral devices. It is not intended that this course will produce trained computer maintenance technicians.

    d. Include detailed instruction in maintenance and repair work associated with the computer process I/O sub-system.

2. Operator familiarization training:

    a. Instruct Owner's operating personnel in the proper use of the analog and digital process control system.

    b. Include instruction in the system control steps and basic interface with the computer system.

    c. Provide sufficient training to Owner's operating personnel so they can respond to the normal tasks required for operation of the plant.

3. Supervisor and application software training:

    a. Provide supervisory personnel with a working knowledge of all application software supplied.

    b. Include basic digital and computer concepts, process control concepts, database configuration, report configuration, graphic display configuration, and control strategy development.

4. Follow-up Training:

    a. Approximately 60 days after system start-up follow-up training shall be provided.

    b. The training shall answer any questions on the day to day use of the system.

3.10 START-UP SERVICES

A. Upon final completion of all components determine date of start-up jointly with Engineer, Owner and Contractor.

B. System supplier to be responsible for placing of SCADA equipment and systems in operation.

C. System supplier to provide qualified personnel on the job site until successful operation of system is attained.

D. Technical services: Upon completion of equipment installation, the Instrumentation and Control System Integrator shall provide services of a field service engineer for a period of not less than one (1) 8-hour days for start-up of the SCADA and telemetry system.

END OF ATTACHMENT C

3.3.11 Attachment D: Pump Station Electrical Requirements

ATTACHMENT D
PUMP STATION ELECTRICAL REQUIREMENTS

PART 1 GENERAL

1.01 DESCRIPTION

A. The work covered by this specification section includes but is not necessarily limited to the following items of work:

1. Electrical service, distribution equipment and control equipment for pump station construction.

2. Coordination with the electric utility for power and metering.

1.02 SCOPE OF WORK

A. This specification section covers the construction requirements for the complete electrical system and shall be used in conjunction with the Standard Plate Details and Drawings. Provide all materials, labor, equipment, and supervision to install electrical systems. The work shall consist of, but shall not be limited to, the installation of the following:

1. Install new service, electrical distribution, emergency generator and control equipment for a new pump station.

2. Coordination with utility for power service indicated.

1.03 CODES AND PERMITS

A. All work shall be done in accordance with the 2014 Edition of the National Electrical Code (NEC), applicable local ordinances and regulations of local utility company. All permits and inspections certificates shall be paid for by the Contractor.

B. Installation at the wet well shall conform to the requirements of NFPA 820.

1.04 WARRANTY

A. The contractor shall warrant to the owner that all work shall be free from defects and will conform to the contract documents. This warranty shall extend not less than one year from the date of beneficial use.

1.05 WORKMANSHIP AND MATERIAL

A. Workmanship: All work necessary to complete the project shall be executed in a thorough, neat and workmanlike manner.

B. Materials: All materials shall be new and equipment included in Underwriters Label Service shall bear that label.

C. Substitutions: Model numbers indicated herein or shown on the drawings are the Basis of Design. The Contractor may submit for review complete manufacturer information necessary for evaluation of proposed equal equipment. The owner or owner's representative shall have the sole discretion and approval/disapproval authority in this matter. Her/her decisions are final. The approval or disapproval of any submitted item will be considered only if submitted ten days before the bid. Each request shall include a description of the proposed substitute, the name of material or equipment for which it is to be substituted, drawings, cuts, performance and test data for an evaluation and a statement from the equipment manufacturer's representative that the items to be substituted meet or exceed the specifications of the item specified.

D. Costs: If the contractor chooses to provide approved substitute equipment, which meets all the aforementioned requirements but has different characteristics, which causes any additional costs, he shall bear all costs associated with that substitution. All changes shall be coordinated with the engineer, owner and general contractor.

1.06 COMPLETION OF WORK

A. Testing: At the completion of work, a test shall be made and the entire system shall be shown to be in perfect working condition. The following shall be made available to personnel conducting the test:

1. Electrician with hand tools

2. Accurate voltmeter

3. Clamp-on ammeter

4. Test lamp

5. Phase rotation indicator

6. Complete electrical specifications and drawings with addenda and revisions.

B. Submittal: Upon completion of work, submit for approval three bound copies of the following:

1. Certificate of Final Inspection from local authorities

2. Details of operations and maintenance of equipment. This shall include

corrected shop drawings, wiring diagrams, spare parts list and recommended maintenance procedure.

3. Grounding Testing Results

C. Instruction: After completion and at a time convenient to the Owner, qualified mechanics shall thoroughly familiarize the Owner's personnel with the operation and the maintenance of the items listed under "Submittal".

D. Guarantee: All equipment and materials furnished and all work performed under this section of specifications shall be guaranteed to be free of defective materials and workmanship for a period of one year (unless a longer period is specified elsewhere herein) after final acceptance of the work by the Owner. Upon notice from the Owner of failure of any part of the guaranteed equipment or failure of systems to operate properly during the guarantee period, the affected part or parts shall be promptly replaced with new parts by the Contractor at no additional cost to the Owner. All labor required to perform guarantee shall be included as part of the complete guarantee warranty.

E. Warranties: Provide manufacturer's equipment warranties prior to final inspection.

1.07 EQUIPMENT REQUIRING ELECTRICAL SERVICE

A. Review all specification sections and drawings for equipment requiring electrical service. Provide service to and make connections to all such equipment.

B. Drawings are based on design loads of one manufacturer. If equipment actually furnished have loads, numbers of connections, or voltages other than those indicated on the drawings, then control equipment, feeders, and overcurrent devices shall be adjusted as required, at no additional cost to the owner. Such adjustments are subject to review by the engineer.

C. Catalog numbers indicated with equipment, devices and lighting fixtures are for convenience only. Errors or obsolescence shall not relieve the furnishing of items which meet the technical description given in specifications, noted, or required by function designated.

1.08 PRODUCT DELIVERY, STORAGE, HANDLING, AND PROTECTION

A. Provide a dry, weather-tight space for storing materials. Store packaged materials in original undamaged condition with manufacturer's labels and seals intact. Handle and store material in accordance with standards to prevent damage. Equipment and materials shall not be installed until such time as the environmental conditions of the job site are suitable. Replace damaged materials.

1.09 CORROSION PROTECTION

A. Coat rigid aluminum conduit and vertical structural aluminum supports with two coats of 3M Scotchrap pipe primer and two overlapping layers of 3M Scotchrap 51 tape.

1.10 DRAWINGS

A. The drawings indicate the general arrangement of electrical equipment, based on one manufacturer's product. Coordinate installation of equipment with all other trades. Do not scale drawings for connection locations. Bring all discrepancies to the immediate attention of the engineer.

B. Contractor shall install and circuit all electrical work as indicated on drawings unless specific building construction requires a change or rerouting of this work. He shall keep a record of the location of all concealed work, including the underground utility lines. He shall document all changes in the manner specified by the General Conditions, Special Conditions and Supplementary General Conditions to the Mechanical and Electrical Work.

1.11 CUTTING, PATCHING, EXCAVATING & BACKFILLING

A. All cutting and patching required to carry out the work shall be provided under other Specification Sections.

B. All excavation and backfilling required to install conduit shall be provided under this Section. Backfill shall be compacted as required under other Specification Sections.

1.12 MATERIALS

A. Materials specified by manufacturer's name shall be used unless written permission for substitution is issued by the owner or owner’s representative.

B. All materials shall be new and in accordance with applicable standards, i.e., Underwriters' Laboratories National Electrical Manufacturer Association (N.E.M.A.), Institute of Electrical and Electronic Engineers (I.E.E.E.), United States of American Standards Institute (U.S.A.S.I.), U.L. approved equipment shall bear U.L. label. Similar material shall be the product of one manufacturer.

C. Materials of the same type shall be the product of one manufacturer.

1.13 SHOP DRAWINGS

A. The Contractor shall submit for review by the Engineer a complete schedule and data of materials and equipment to be incorporated in the work. Submittals shall be supported by descriptive material, such as catalogs, cuts, diagrams,

performance curves, and charts published by the manufacturer, to show conformance to specification and drawing requirements; model numbers alone will not be acceptable. Complete electrical characteristics shall be provided for all equipment.

B. Submittals shall be made for each of the following items:
Enclosed Circuit Breakers Material List
Automatic Transfer Switches Wiring Devices
Generator Junction Boxes
Lighting Fixtures Surge Protection Device
Reduced Voltage Solid State Starters CADA System
Pump Control Panel Cable Support Grips
Full Voltage Non-Reversing Starters Cable Support Bracket
Float Switches Level Transducer

C. Each individual submittal item for materials and equipment shall be marked to show specification section and paragraph number which pertains to the item.

D. Prior to submitting shop drawings, review the submittal for compliance with the Contract Documents and place a stamp or other confirmation thereon which states that the submittal complies with Contract requirements. Submittals without such verification will be returned disapproved without review.

1.14 SERVICE

A. The electrical service shall be coordinated with the electrical utility.

1. Aerial services shall originate in a weatherhead installed adjacent to termination of a utility furnished secondary service drop.

2. Underground service shall originate in the secondary compartment of a utility furnished pad mounted transformer or a utility pedestal.

B. The electrical service shall be either 240/120V, 3 phase, 4 wire Delta or 480/277V, 3 phase, 4 wire Wye.

C. Complete metering systems shall be provided. Install the system in accordance with the utility standards. Coordinate meter location with local utility and provide channel rack for mounting of meter.

D. Application and payment of fees related to the electrical service and meter shall be paid by the contractor and/or the developer. Upon project acceptance, ownership and billing will be transferred to the City of Columbia.

1.15 RECORD DRAWINGS

A. At the time of final inspection, provide three (3) sets of data on electrical equipment used in the project. This data shall be in bound form (two sets) and electronic (PDF on CD), and shall include the following items:

1. Shop drawings on equipment listed above.

2. Data sheets indicating electrical characteristics of all devices.

3. Data sheets on all lighting fixtures indicating voltage, lamp, and ballast used in each fixture.

4. Test results required by "Electrical Systems Operation Test."

5. As-Built laminated schematic drawing.

1.16 ELECTRICAL SYSTEMS OPERATIONAL TEST

A. Prior to final inspection, the following systems or equipment shall be tested and reported as herein specified.

1. Each ground rod installation shall be tested after all connections to ground rods are made. Ground rod installations shall be tested by "fall of potential" measuring method using ground resistance test meter and two auxiliary electrodes driven into the earth, interconnected through the meter with the ground rod installation being tested. Placement of auxiliary electrodes shall be in accordance with operating instructions of test meter, but in no case shall auxiliary current electrodes be placed within seventy feet of the grounding system being tested. Test data shall indicate placement of auxiliary electrodes with respect to system being tested, data readings were taken and lowest resistance recorded.

2. Three (3) typewritten copies of the test shall be submitted to the Engineer for approval.

1.17 SITE INVESTIGATION

A. Prior to submitting bids of the project, visit the site of the work to become aware of existing conditions which may affect the cost of the project.

PART 2 PRODUCTS

2.01 BRANCH CIRCUIT BREAKERS - DUPLEX PUMP CONTROLLER

A. Provide circuit breakers as an integral part of the Duplex pump controller.

B. Branch circuit breakers shall be bolt-on, quick-make, quick-break, NEMA Rated thermal magnetic type. Two and three pole breakers shall be common internal

trip. Tie handles are not acceptable. Breakers shall be ambient compensated type at 50 degrees C.

C. Each circuit shall be identified.

D. Provide an equipment grounding bar for termination of equipment ground conductors.

E. Minimum interrupting rating shall be as shown on the drawings.

F. Provide products of Square D, Eaton, or GE.

2.02 DEVICES

A. Duplex receptacles shall be a NEMA 5-20R type WR ground fault type installed within duplex pump control panel. Provide Hubbell GFR5362SG.

2.03 GROUNDING

A. Grounding conductors shall be green insulated copper, bare copper conductor or black insulated conductor with green tape.

B. Ground rods shall be 3/4 inch x 10 foot copper-bonded. Provide products of Eritech.

2.04 CONDUIT SYSTEM

A. Provide complete conduit system including boxes, fittings, supports, etc. Conduits shall be rigid aluminum conduits above grade and schedule 80 PVC below grade.

B. Transition from below grade PVC to above grade rigid aluminum shall be made with a rigid aluminum elbow and not a PVC elbow. Provide corrosion protection per paragraph 1.09.

C. Rigid aluminum fittings shall be standard aluminum threaded couplings, threaded hubs and elbows; set screw or on-threaded fittings are not permitted. Non-metallic conduit fittings shall be of the same material as the conduit furnished and shall be the product of the same manufacturer.

D. Rigid aluminum conduit shall be utilized for all conduits routed to the pump station wet wells or any other classified areas.

2.05 CONDUCTORS

A. Provide all conductors specified or required for proper operation of systems. Conductors shall be copper and shall be No. 12 AWG unless otherwise indicated. For No. 12 and No.10, use Type XHHW solid conductor, for No.8 through No.

4/0, use Type XHHW stranded, for No.250MCM and larger use Type RHW.

B. All conductors shall have size, grade of insulation, voltage and manufacturer's name permanently marked on the outer cover at regular intervals and shall be readable from all junction boxes and panels.

2.06 JUNCTION BOXES

A. Junction boxes shall be stainless steel NEMA 4X with hinged door and quarter-turn latch.

2.07 CIRCUIT BREAKERS

A. Circuit breakers shall be of the ampacity, class, and NEMA Rated as shown on the drawings, terminals shall be suited for 60 degrees C or 75 degrees C conductors. All separately mounted breakers shall be in NEMA 4X 316 stainless steel enclosures. Breakers used for service disconnects shall be labeled as such. Factory installed ground terminals and neutrals (S/N) shall be provided in all enclosures. Breakers shall be Eaton, Square D or G.E.

2.08 FLOAT SWITCHES & LEVEL TRANSDUCER

A. Refer to the SCADA specifications for acceptable float switches and level transducer manufacturers and products.

2.09 FULL VOLTAGE/NON-REVERSING (FVNR) MAGNETIC STARTERS

A. Magnetic starters shall be across-the-line non-combination type.

B. Magnetic starters shall be NEMA size one unless other size is shown on the drawings or unless larger size is required by actual motor controlled. Starters shall be provided in the open frame configuration for mounting in the pump control panel. Starters shall be for operation on a three-phase 460-volt system, the control coil shall be coordinated with/by the control panel fabrication shop.

C. Each magnetic starter shall have solid state overload protection. Control voltage shall be 120 volts provided from a separate source. Provide fuse for control coil. Provide hand-off-automatic switch. Interlocks shall be provided to provide control sequence indicated on the drawings and in these specifications.

D. Solid state overload protection shall be Square D TeSysT.

2.10 REDUCED VOLTAGE SOLID STATE STARTER (RVSS)

A. Reduced voltage solid state starter shall be NEMA sized for use with the specific horsepower, three phase 460 volt squirrel cage induction motor indicated on the plans. The reduced voltage solid state starter shall be of the solid state type using

SCR's to provide reduced voltage starting with high starting torque and smooth stepless acceleration to full speed. Maximum motor in-rush current during starting shall be 250% of normal motor full load amps. Acceleration shall be set for 30 seconds from start to full voltage. Reduced voltage starter shall be mounted in the pump control panel.

B. Provide shorting contactor to remove SCR's from the system once the motor reaches full speed.

C. Current sensing for motor overload shall be electronic type set at 115% of normal motor full load amps. The electronic overload device shall allow for motor starting current up to 350% of motor full load amps for not more than 40 seconds. Overload beyond limits specified herein shall trip the motor control circuit in less than 1 Hz. The electronic current sensing device shall also provide phase imbalance protection to remove the motor from the line should voltage levels be unbalanced more than 7-1/2%. The control system shall also remove the motor from the line within 45 seconds should the motor become stalled for any reason.

D. Provide programmable controlled stop on torque ramp, 0.5 to 60 seconds.

E. Control power shall be 120 volts AC from the pump control panel. The electronic control shall contain pilot lamps to indicate the following:

1. Control Power On

2. Trip Condition Due to Load Unbalance.

3. Trip Condition Due to Overload or Locked Rotor

F. An oil-tight pilot lamp indicating motor running shall be mounted on the compartment door.

G. Provide products of Square D (Altistart 48), no substitutions permitted.

2.11 PUMPING STATION CONTROL PANELS

A. Furnish and install control panel housed in a NEMA 4X 316 stainless steel enclosure, with heavy duty three-point latch, door-within-door construction for operation on 480/277 volt, 3 phase, 4 wire Wye 60 hertz service or 240/120 volt, 3 phase, 4 wire Delta, 60 hertz service, as indicated on the engineers construction drawings. The enclosure shall include an inner door for the mounting of control and indication devices. The control panel shall bear a U.L. service entrance label.

B. Provide panel with insulated neutral bus and ground bus attached to the panel interior. Provide copper braided jumper between interior (back plate) and enclosure ground bus.

C. For each pump motor there shall be included an individual motor circuit breaker, FVNR starter or reduced voltage solid state starter, as indicated on the drawings, manual reset, hand-off-auto selector switch, green running light and elapsed time meter and amp meter for Phase B. Provide door mounted pilot lamps for a high level alarm and phase failure/under voltage alarm. Provide alarm light mounted as shown on drawings. Provide 20 amp single pole breakers in control panel to serve auxiliary loads shown on the drawings. Provide phase failure/under voltage relay to de-energize motors and to provide signal alarm to SCADA. All components shall be NEMA rated.

D. Units shall be pre-calibrated to match motors and control characteristics and factory sealed to ensure trip setting in tamperproof. A 24 volt control circuit transformer with disconnect and overload protection shall be included with an automatic electrical alternator for use with the level sensor function.

E. Note that only the 24 volt control voltage shall be used in the wet well sensor circuits. Provide intrinsically safe barriers on float conductors. The remainder of the controls shall be designed to operate on 120 volt, 60 hertz, single phase. The complete unit shall be completely tested and inspected at the factory prior to shipment. Complete electrical diagrams, dimensional drawings, and functional description shall be provided for approval by the Engineer.

F. Provide field terminals for remote indication in the separate RTU Control Panel. Provide the digital and analog signals specified in Attachment C.

G. Contract documents show separately mounted main breaker, generator breaker and automatic transfer switch.

H. Panel Components:

1. Pump Controller, as described herein.

2. Elapsed Time Meters: Per pump required - door mounted.

3. Hand-off-Auto Switch per pump - door mounted.

4. Pump Running pilot lamp (LED) per pump – door mounted.

5. Pump Fault pilot lamp (LED) per pump – door mounted.

6. High level pilot lamp (LED) - door mounted.

7. Phase failure/under voltage pilot lamp (LED) - door mounted.

8. AMP Meter-B Phase-Door Mounted.

9. FVNR/RVSS starters for each pump provided.

10. Motor Circuit breaker for each pump provided.

11. Protective relays and auxiliary relays. Relays shall be 8 or 11 pin round.

12. Terminal blocks for all connections.

13. Vaportight and waterproof alarm beacon (LED) with wire guard mounted as shown on drawings.

14. Intrinsically safe relays and panel barriers for all float switches.

15. Pump Over Temperature Alarm pilot lamp (LED) per pump – door mounted.

16. Pump Moisture Alarm pilot lamp (LED) per pump – door mounted.

2.12 CONTROLS

A. The following control features shall be furnished:

1. Lead/Lag Pump Control based upon wet well level.

2. Pump Alternation.

3. Back-up Pump Control by the local Pump Control Panel in the event of failure of either the PLC or the analog level transducer.

4. Pumps shall not operate 1 minute after loss and restoration of power. Set the controls so only one pump can start at a time.

2.13 PUMP CONTROLLER

A. Provide one (1) Mercoid series MPC level controller for primary control of the pumps.

B. The pump controller shall utilize the submersible level transducer for pump control in a Lead/Lag configuration with automatic alternation. Level setpoints shall be determined at the time of field installation and testing.

2.14 SUBMERSIBLE LEVEL TRANSDUCER

A. Provide one (1) submersible level transducer with 4 to 20 mA analog output proportional to wet well level. Provide a minimum of 40 feet of polyurethane cable or optional length as required by site conditions.

B. The submersible level transducer shall be the Bird Cage Model BC001 as

manufactured by Blue Ribbon Corporation.

2.15 FLOAT SWITCHES

A. Provide two (2) ITT Flyght ENM-10 level regulator switches with adequate cable length for this application.

B. Floats shall be used for independent secondary pump control in the event of the failure of the pump controller or submersible level instrument. One float switch shall detect high level and shall start all pumps; the second float switch shall detect low level and shall stop all pumps. Float elevations shall be determined at the time of field installation and testing, nominally to be outside the normal operating range of the primary pump controller.

PART 3 EXECUTION

3.01 CONDUIT SYSTEMS

A. Exposed conduits shall be installed parallel or at right angles to structures.

B. Support exposed conduits at 5 foot intervals. Individual runs of conduits shall be supported by one whole conduit straps; groups of conduits shall be supported on B-Line B24AL channel, or approved equal.

C. Conduit support devices shall be B-Line B2000 series Stainless Steel Conduit clamps or approved equal.

D. Rigid aluminum conduit shall be attached to sheet metal enclosures with threaded hubs.

E. All conduits installed below grade shall be schedule 80 PVC and shall be installed 24 inches below finished grade. Where conduits turn up provide rigid aluminum elbow.

F. Protect conduits against dirt, plaster, etc., with conduit plugs. Plug shall remain in place until all masonry is complete.

G. All rigid aluminum conduits entering or exiting concrete, rigid aluminum elbows below grade/buried, and aluminum structural support members embedded in concrete, shall be protected with two coats of Scotchrap Pipe Primer and two overlapping layers of Scotchrap 51 tape. Protection shall extend through concrete to 6” above concrete or grade.

H. All conduits entering electrical equipment from below grade and wet well shall be sealed with electrical putty in accordance with the NEC.

3.02 CONDUCTORS

A. All conductors shall be color-coded as follows:

System Voltage	Phase A	Phase B	Pace C	Neutral
480/277V, 3 phase, 4 wire Wye	Brown	Orange	Yellow	Grey
240/120V, 3 phase, 4 wire Delta	Black	Orange (High Leg)	Red	White
240/120V, 1 phase, 3 wire	Black	Red	---	White
Ground: Green				

Branch circuits must be connected as indicated.

B. Splices in branch circuit conductors shall be made with Skotchlok insulated connectors, Ideal Wing Nuts, or Buchanan Steel Crimping Sleeves, and nylon caps. Splices in motor junction boxes, wiring troughs and splices in conductors larger than No. 8 AWG shall be made with long barrel, tin plated compression crimps and insulated with heavy wall, 600V rated hear shrinkable tubing.

C. Only one conductor shall be installed under terminal of individual circuit breaker or mechanical lug.

D. All field control wiring shall be labeled with type-written, heat-shrinkable wire markers.

3.03 EQUIPMENT CONNECTIONS

A. All equipment requiring electrical connections shall be connected under this section of these specifications. Where electrical connection to equipment requires specific locations, such locations shall be obtained from shop drawings. Do not scale drawings for location of conduit stub-ups to serve specific equipment.

B. Electrical circuits to equipment furnished under other sections of these specifications are based on design loads. If actual equipment furnished has loads other than design loads, electrical circuits and protective devices shall be revised to be compatible with equipment furnished and in compliance with the National Electrical Code at no additional cost to the Owner.

C. Equipment furnished under other sections of these specifications to be connected under this section of the specifications shall consist of, but not be limited to, the following:

D. Pumping Station Equipment

E. The Contractors attention is directed to other sections of these specifications, where equipment requiring electrical service is specified, to become aware of the scope of work under this section of these specifications requiring electrical service

and connections to equipment specified elsewhere.

3.04 GROUNDING

A. The neutral conductor shall be grounded to a ground rod system. The system grounding conductors shall be Bare Copper size as indicated on the plans. Provide three ground rods in a delta configuration 20’ apart.

B. All non-current carrying parts of electrical equipment shall be grounded. The continuity of the ground shall be maintained using a green insulated grounding conductor installed in all raceways.

C. Ground rods shall be installed with the top of the rod 12 inches below finished grade. Connections to ground rods shall be made with chemical weld connections.

D. Upon completion of the ground rod installation the Contractor shall record the ground reading. This ground reading shall not be taken within 48 hours of rainfall. Results of ground readings shall be forwarded immediately to the Engineer. Provide additional rods as required. The resistance to ground shall be below 5 OHMS.

E. Grounding terminal of receptacles shall be grounded to grounding conductor and to outlet box with green insulated pigtail with 10/32 washer head machine screw.

3.05 SURGE PROTECTION

A. Surge protection device (SPD) equipment shall be mounted where shown on the drawings. Overcurrent protection and connections shall be made with conductors as recommended by the manufacturer.

B. Grounding shall be provided in accordance with manufacturer’s recommendations and requirements.

C. SPD’s shall include status dry contacts for use at remote PLC/RTU’s.

3.06 EQUIPMENT IDENTIFICATION

A. All electrical equipment shall be identified with engraved plastic nameplates or engraved device plates. Surface mounted equipment shall have identification attached to the outside cover. Pull boxes and junction boxes shall be identified. Outlet boxes for fixtures and devices need not be identified.

B. Nameplate shall be affixed to enclosures with stainless steel screws.

3.07 SPARE PARTS

A. Provide one complete set of fuses, four control relays, one intrinsically safe barrier, and one full set of thermals for motor starters.

B. Spare parts shall be delivered to the owner at time of final acceptance and before final payment.

3.08 GUARANTEE AND TEST

A. Upon completion of the project all systems shall be tested for proper operation as directed by the Engineer or his representative. Equipment covers, i.e., panelboard, motor controls, etc., shall be removed where required for inspection of internal wiring. The Contractor shall furnish the personnel, tools and necessary equipment to inspect and test the system.

B. Where ground readings are required, the Contractor shall provide a typewritten copy of certification of ground reading. Data shall indicate date readings were taken and lowest resistance recorded.

C. All systems and component parts shall be guaranteed for one year from date of final acceptance of the completed project. Defects found during this guarantee period shall be promptly corrected at no additional cost to the Owner.

3.09 PREPARATION OF FINAL APPLICATION FOR PAYMENT

A. Fill in Application for Payment form as specified for progress payments.

B. Submit all Project Record Documents.

C. Submit all test reports.

END OF ATTACHMENT D

PART 4: SPECIFICATION FOR APPLICATION OF THE COLUMBIA DRAINAGE ORDINANCE, STORM SEWER DESIGN

TABLE OF CONTENTS

Paragraph	Description	Page No.
4.1	General	4-1
4.2	Design Procedures	4-1
4.3	Design Basis	4-1
4.4	Forms	4-2
4.5	Ordinance	4-8

CITY OF COLUMBIA REGULATIONS
PART 4
APPLICATION OF THE COLUMBIA DRAINAGE ORDINANCE, STORM SEWER DESIGN

4.1 GENERAL – All drainage computations and storm sewer improvements shall be in accordance with the Columbia Drainage Ordinance and the Flood Plain Insurance Program. Flooding from major streams as well as local flash flooding will be considered in design.

4.1.1 The Engineering Report and plans shall conform to specifications of Part 1.

4.1.2 On small projects, such as a single building, or buildings on one lot, computations need not be submitted with plans. The engineer or architect must state over his signature that the proposed plan meets the Columbia Drainage Ordinance and/or the Flood Damage Prevention Ordinance requirements. For certain projects as defined in state law the certification may be signed by a duly registered landscape architect.

4.1.3 On small projects, engineer's certification may be waived when the project is located in an existing subdivision and when the owner will sign a "hold harmless" statement. (See Item 4.3.1.)

4.2 DESIGN PROCEDURES – In determining the required capacities of storm sewers, the following factors are to be considered:

4.2.1 Imperviousness of the soil, selection of runoff coefficient.

4.2.2 Time of concentration from the upper reaches of the drainage area to the several design points.

4.2.3 Area of the drainage area.

4.2.4 Flow to be expected for the 10, 25, 50 and 100 year return frequency storm.

4.2.5 Water surface elevation of storm water thus calculated.

4.3 DESIGN BASIS

4.3.1 Flow

4.3.1.1 Major and minor streams, as defined in the Columbia Drainage Ordinance, shall be designed to carry the 25 year storm within the improved section of the channel, the 50 year storm within the dedicated drainage easement and the 100 year storm must be contained one foot below the low point of the structure.

4.3.1.2 Flow in channels shall be determined by Manning's equation or Kutter's formula.

4.3.1.3 Runoff may be determined by the "Rational Method." Other "accepted practice" methods will be approved provided such method produces similar results with regard to runoff.

4.3.1.4 Time of concentration shall be determined using the longest path "L" from the upper reaches of the drainage area of the design point. Care should be exercised when determining the average slope over the distance "L".

4.3.1.5 Runoff coefficients used shall be in accordance with the Columbia Drainage Ordinance.

4.3.1.6 Nomographs for solution of t and I, such as those published in Seelye's DATA BOOK FOR CIVIL ENGINEERS, are acceptable.

4.3.2 Drainage Materials

4.3.2.1 Structures of reinforced concrete, HDPE (corrugated outside, smooth inside), are acceptable provided trench loads and superimposed loads are considered and the proper "n" value applied in accordance with good practice. All types of pipe must be installed according to manufacturer's guidelines.

4.3.2.2 Junction boxes may require sweeps for direction of flow if deemed necessary based on conditions. This is most likely to be required in cases of 48"or larger pipe or 90 degree turn.

4.3.2.3 Grades will be such as to produce minimum velocities of 2 f.p.s. Velocities up to 20 f.p.s. are acceptable provided adequate blocking is provided and that this velocity is reduced so as to prevent erosion at the outlet end of the structure.

4.3.2.4 Depth of Cover

4.3.2.5 Structures shall have adequate cover to prevent damage from traffic and from other structures. All structures and pipe must be installed according to manufacturer's guidelines.

4.3.2.5.1 Depth at inlets shall be such that the distance from the water surface above the inlet to the water surface in the pipe will be equal to or exceed the velocity head (v2/2g) of water in the pipe.

4.3.2.6 The street paving and curb and gutter may be utilized to carry a part of the 25 year return frequency rain. Flow allowed in the curb and gutter is the difference between the 10 and 25 year return frequency storm.

4.3.2.7 Easement

4.3.2.8 All storm drain pipes proposed to be owned and maintained by the City of Columbia shall have a minimum easement width of 20', of which 15' shall be continuous on one side of the pipe. Larger easements may be required based on pipe size, location and access feasibility. Additional ingress/egress easements may be required if necessary for maintenance purposes.

4.4 FORMS

4.4.1 Form 4A

Engineering Division
City of Columbia
Columbia, S.C.

_____19_____

Property owner and Address:

_____

_____

_____

_____

Property Location: _____

_____

_____

_____

I hereby request that the storm drainage for the proposed _____ be approved and I understand and agree that:

a. It shall be incumbent upon the property owner to determine if existing drainage meets the requirements of the proposed use of the property.

b. The property owner shall hold the City harmless from any or all claims or damages should flooding occur.

c. Changes in the Columbia Code of Ordinances may void this agreement prior to the issuance of a building permit.

I hereby acknowledge and agree to the conditions stated above.

Date _____ Signature _____
Property Owner

Approval: _____ Date _____
City Engineer

PR-41B

4.4.2 Form 4B

Engineering Division
City of Columbia
Columbia, S.C.

_____, 19____

Property owner and Address:

_____

_____

_____

_____

Location: _____

_____

_____

_____

I hereby request that the storm drainage for the proposed _____ be approved and I understand and agree that:

a. The property is below the 100 year flood plain elevation as shown on the Army Corps of Engineers Flood Boundary and Floodway Maps. The 100 year frequency flood elevation in this area, as determined from these maps, is approximately _____ feet mean sea level. The City of Columbia Code of Ordinances, Chapter 3, Section 6-3127, requires that the floor elevation of all structures erected within areas designated as flood plain areas shall be protected from flood hazards by filling the building site to an elevation of not less than two (2) feet above the regulatory flood level with such elevations extending not less than twenty-five (25) feet outward from the base of the structure. In the event this cannot be accomplished, the Code of Ordinances provides that service facilities such as electrical, heating and cooling equipment shall not be less than two (2) feet above the regulatory flood level and the floor elevation must be not less than two (2) feet above the regulatory flood level. Therefore the minimum floor elevation must be _____MSL and the service facilities such as electrical, heating and cooling equipment must be above elevation _____MSL.

b. Prior to storm drainage approval, the property owner shall provide the City with a property plat showing mean sea level elevations at all property irons, midway of property lines and midway of property. In addition, the property owner shall provide certification by a registered land surveyor that states the first floor was constructed at or above _____MSL.

c. It shall be incumbent upon the property owner to determine if existing drainage meets the requirements of the proposed use of the property and does not result in a negative impact to the operation of the system upstream or downstream of the property

d. The property owner shall hold the City harmless from any or all claims or damages should flooding occur.

e. Changes in the Columbia Code of Ordinances may void this agreement prior to the issuance of a building permit.

f. It is understood that this agreement has no effect on flood insurance rates.

I hereby acknowledge and agree to the conditions stated above.

Date _____ Signature _____
Property Owner

Approval: _____ Date _____
City Engineer

PR-41C

4.4.3 Form 4C

Engineering Division
City of Columbia
Columbia, S.C.

_____, 19____

Property owner and Address:

_____

_____

_____

_____

Location: _____

_____

_____

_____

_____

I hereby request that the storm drainage for the proposed _____ be approved and I understand and agree:

The property is within the regulatory flood area. It is estimated that the ground surface in my yard will be inundated by the regulatory flood to a depth of approximately _____ feet.

My signature below indicates that I understand that the temporary structure will be inundated to some extent from time to time and will hold the City harmless from any and all claims should flooding occur.

I hereby acknowledge and agree to the conditions stated above.

Date _____

Signature _____
Property Owner

Approval: _____
City Engineer

Date _____

PR41D

4.4.4 Form 4D

Engineering Division
City of Columbia
Columbia, S.C.

_____, 19____

Property owner and Address:

_____

_____

_____

_____

Location: _____

_____

_____

_____

_____

I hereby request that the storm drainage for the proposed _____ be approved and I understand and agree:

a. The property may be within the regulatory flood area as indicated on _____ maps (copy attached).

My signature below indicates that I understand that the temporary structure may be inundated to some extent from time to time and will hold the City harmless from any and all claims should flooding occur.

I hereby acknowledge and agree to the conditions stated above.

Date _____

Signature _____
Property Owner

Approval: _____
City Engineer

Date _____

PR-41E

4.5 ORDINANCE

ORDINANCE

Amending 1979 Code of Ordinances of The City of Columbia, South Carolina, Part 6, Chapter 5 Storm Drainage

BE IT ORDAINED by the Mayor and Council this 14th day of November, 1990, that the 1979 Code of Ordinances of The City of Columbia, South Carolina, Party 6, Chapter 5 Storm Drainage, is amended as follows:

Sec. 6-5001. Purpose and Scope

It is the intent of this ordinance to protect the general health, safety and welfare of the public from hazards and damages of flooding from the various drainage areas in the City, to provide clean and sanitary channels for runoff; to prevent pollution of watersheds, streams and natural drainage channels, to prevent the encroachment of buildings or improvements on natural drainage channels; to protect natural scenic areas; and to provide for the conservation of the natural resources of the area. All subdivisions of land and all developments or improvements of any character which affect drainage in any portion of the City shall be subject to the provisions of these regulations.

1. The title of the chapter is amended to read: Sediment and Erosion Control and Storm Drainage.

2. Sec. 6-5002. Definitions is amended to read as follows:

The following definitions apply to words and terms used in this chapter. All other words shall have their customary meanings.

(1) City Engineer: Means the City of Columbia Engineer

(2) Construction: Any building or erection of a structure or any preparation for same.

(3) Developer: The owner of property or his agent engaged in the subdivision or improvement of land or the construction of structures upon the land within the City, or who makes application for plan approval and a grading permit under the provisions of this ordinance.

(4) Drainage: A general term applied to the removal of surface or subsurface water from a given area either by gravity via natural means or by systems constructed to so remove water, commonly applied herein to surface water.

(5) Drainage system: The surface and subsurface system for removal of water from the land, including both the natural elements of streams, marshes, swales, and ponds, whether of an intermittent or continuous nature, and the man-made elements such as improved open channels, ditches, culverts, retention facilities, and enclosed storm sewers.

(6) Embankment or fill: A deposit of soil, rock or other material placed by man.

(7) Erosion: The general process by which soil and rock fragments are detached and moved by the action of wind, water, ice, and gravity, either naturally or induced.

(8) Erosion and sediment control plan: A plan which adequately describes necessary land management practices and control measures, including a timetable or schedule for their implementation, which is necessary to effectively minimize soil erosion and sedimentation, prepared and approved as provided herein for application to a particular land area.

(9) Flood: A temporary rise in the level of water which results in inundation of areas not ordinarily covered by water.

(10) Grading: Any displacement or re-arrangement of soil by stripping, excavating, filling, stockpiling, or any combination thereof and including the land in its excavated or filled state.

(11) Grading permit: A certificate issued to allow performance of work pursuant to an approved erosion and sediment control plan prepared under the provisions of this ordinance.

(12) Land: Any ground, soil or earth including marshes, swamps, drainage ways, and areas not permanently covered by water.

(13) Land distribution: Any activity involving the clearing, grading, transporting, filling, and any other activity which causes the land to be exposed to the danger of erosion.

(14) Primary and secondary drainage channels:

a. Primary drainage channel: A drainage channel, stream or creek which drains an area of five hundred (500) acres or more.

b. Secondary drainage channel: A drainage channel, stream or creek which drains an area of less than five hundred (500) acres.

(15) Run-off: The portion of the precipitation on the land which reaches the drainage system.

(16) Sedimentation: The process which operates at or near the surface of the ground, the deposit of soil, debris, and other materials from either water or land on other ground surfaces or in water channels.

(17) Structure: Anything constructed or erected, the use of which requires a location on the ground, or attached to something having a location on the ground including, but not limited to, tennis courts, swimming pools, fences, buildings, parking areas, and roads.

(18) Vegetation: All plant growth, including trees, shrubs, grasses and mosses.

Sec. 6-5003. Responsibility for Improvements – Storm Drain.

a. Primary Drainage Channels: The improvements of Primary drainage channels shall be the long-range responsibility of the developer and the City. The developer of land or improvements within an area containing a primary drainage channel shall design, plan and carry out his developments in a manner that will not interfere with or restrict the natural flow of water materially change the condition of runoff within the calculated area below the one hundred (100) year maximum flood elevation. Increased runoff and change in primary channels which are created by such developments within primary drainage areas shall be the planning responsibility of the developer and shall be made in accordance with the provisions of this ordinance. The developer may construct the primary channel improvements. If the developer chooses not to construct the necessary primary channel improvements then the City may make these improvements but is not obligated to construct the improvements within any specific time period.

b. Secondary Drainage Channels: The improvement of secondary drainage areas and its channels shall be the responsibility of the developer.

Sec. 6-5004. Method of Calculating Stream Flow and Runoff – Storm Drain.

The following formula and values shall be used for calculating all stream flow and runoff for the regulations established herein:

a. The following rainfall frequencies shall be used in the calculations for storm water runoff and facility design depending upon the size of the watershed.

Size-Acres	Frequency-Years
500 - +	50
40 - 500	25
0 - 40	10

b. Runoff from primary areas greater than five hundred (500) acres may be computed by accepted engineering principles (such as the Kravens Modified Method) as approved by the City Engineer.

c. Runoff from secondary drainage areas of five hundred (500) acres or less shall be determined by the Rational Formula:

$$Q = (A)\ (I)\ (R)$$

Q equals flow in cubic feet per second

A equals area to be drained in acres, determined by field surveys for areas less than one hundred (100) acres, and by latest government quadrangle maps for larger areas.

I equals percent of imperviousness of the area; may vary between seventy to ninety percent (70 to 90%). Coefficients lower than these indicated values may be used; however, in such instances individual block calculations will be submitted with plans.

R equals rate of rainfall over entire drainage area in inches per hour, based on time for concentration and latest government records for area.

d. The size of closed storm sewers, open channels, culverts, and bridges shall be determined by using the Manning Formula which may be modified for use with runoff determined by the Rational Formula to:

$$Q = \frac{1.486\, R^{2/3}\, S^{1/2}\, A}{N}$$

Q equals discharge in cubic feet per second.
A equals cross-sectional area of water in conduit in square feet.
R equals hydraulic radius of water in conduit.
S equals mean slope of hydraulic gradient in feet of vertical rise per foot of horizontal distance.
N equals roughness coefficient.

Note: The City will not accept drainage pipes less than 18” in diameter.

Sec. 6-5005. Primary Drainage Channel Requirements – Storm Drain.

All primary drainage channels which are located within or immediately adjacent to an improvement, development or subdivision shall be protected and improved by the developer as follows:

a. Drainage easement of satisfactory width to provide working room for construction and maintenance shall be deeded to the City/County. All storm drain pipes proposed to be owned and maintained by the City of Columbia shall have a minimum easement width of 20’, of which 15’ shall be continuous on one side of the pipe. Larger easements may be required based on pipe size, location and access feasibility. Additional ingress/egress easements may be required if necessary for maintenance purposes. All land having an elevation below the 50 year flood elevation for the final improved channel and not protected by levees or dikes or fill shall be dedicated for the purpose of providing drainage and/or utility easement use. Levees, dikes and other fill materials shall not be allowed within the flood plain unless by specific approval of the City Engineer.

b. The existing channel lying within or immediately adjacent to the subdivision or parcel of land proposed for development or redevelopment shall be cleaned to provide for the free flow of water, and the channel shall be straightened, widened and improved to the extent required to prevent overflow, resulting from a fifty (50) year frequency rainfall, beyond the limits of the dedicated drainage easement provided herein. Proper stabilization methods shall be used, as approved by the City Engineer, to ensure the integrity of the side slopes.

c. Site improvements shall provide for the grading of all building pads (footing elevation) to an elevation one (1) foot above the one hundred (100) year frequency flood and for a distance of twenty-five (25) feet from the building pad to the one hundred (100) year level or the property line. Certain type structures are permitted within the flood plain if properly “floodproofed” in compliance with the zoning ordinance and building code.

d. Whenever channel improvements are carried out, sodding, backsloping, cribbing, and other bank protection shall be designed and constructed to control erosion for the anticipated conditions and flow resulting from a fifty (50) year frequency rainfall.

e. Drainage channels located within street easements shall be placed in an enclosed storm sewer except under the following conditions:

1. Where a paved street surface at least two (2) lanes wide is provided on both sides of an improved channel so as to provide access to abutting properties, or

2. For lots with a double-street-frontage, an open drainage channel is permitted between the rear lot line and the paved street; provided that access from the street to the lot is prohibited both at the time of construction and in the future.

3. When a condition outlined in either above is present, adequate space shall be dedicated as Right-of-Way to provide for maintenance of an improved drainage channel and its bank.

f. Culverts, bridges, and other drainage structures shall be constructed in accordance with the specifications and design criteria of the City when the City shall have present or future maintenance responsibility.

Sec. Section 6-5006. Secondary Drainage Channels and Surface Requirements – Storm Drain.

Drainage easements of satisfactory width to provide working room for construction and maintenance as determined by the City Engineer shall be deeded to the City for all drainage improvements. Easements shall be a minimum width of 20’, of which 15’ shall be continuous on one side of the pipe. Larger easements may be required based on pipe size, location and access feasibility. Additional ingress/egress easements may be required if necessary for maintenance purposes.

a. Secondary drainage channels which have a primary function of collecting surface water from adjacent properties or intercepting and diverting side hill drainage shall be improved open channels.

b. Secondary drainage channels which have a primary function of transporting water through the block or collecting water from cross channels and which have a drainage area of less than forty (40) acres shall be improved with closed storm sewers; and where the secondary drainage channel has a drainage area of greater than forty (40) acres, an improved open channel or closed storm sewer shall be provided. When the unit area to be drained is less than four (4) acres, the City Engineer may modify the requirements of the first part of this provision to permit a paved open channel, designed for use as a sidewalk, having a minimum width of five (5) feet or meeting current ADA standards and provided with six (6) inch curbs.

c. Site improvements shall provide for the grading of all building pads (footing elevation) to an elevation one (1) foot above the one hundred (100) year frequency flood and for a distance of twenty-five (25) feet from the building pad to the one hundred (100) year level or to the property line. Certain type structures are permitted

within the flood plain if properly "floodproofed" in conformance with the zoning ordinance and building code.

d. Drainage channels located within street easements shall be placed in an enclosed storm sewer except under the following conditions.

    1. Where a paved street surface at least two (2) lanes is provided for both sides of an improved channel so as to provide access to abutting properties, or

    2. For lots with a double-street-frontage, an open drainage channel is permitted between the rear lot line and the paved street; provided that access from the street to the lot is prohibited at the time of construction and in the future.

    3. When a condition in either above is present, adequate width shall be dedicated as street right-of-way to provide for the improved drainage channel and its bank.

e. Developments:

    1. Single-family residential, duplex or mobile home development: Site grading shall be carried out in such a manner that surface water from each dwelling lot will flow directly to a storm sewer, improved channel, sodded swale, or paved street without running more than two hundred (200) feet.

    2. Commercial, industrial, multi-family and institutional development: Roofs, paved areas, yards, courts, courtyards and other impervious surfaces shall be drained into a storm sewer system. Exception: Such drainage may flow directly into a street, curb and gutter system or improved channel when of small area and approved by the City Engineer.

f. Surface water collected on streets shall be diverted to storm drains at satisfactory intervals to prevent overflow of the street. Six (6) inch high curbs and gutters are permitted to carry surface drainage during a twenty-five (25) year frequency rain for the area and grades involved. Drainage area allowed for surface flow on streets at a point of diversion shall not exceed twenty (20) acres, regardless of flow.

g. Open Channels:

    1. Open channels shall be provided with an improved sanction that will carry the runoff from a rain of fifty (50) year frequency with protection against channel erosion.

    2. Whenever an improved open channel is required or authorized for a secondary drainage channel under the provisions of this ordinance and the channel crosses residential lots which were developed under a Planned Unit Development or where the channel improvement will be designed as an area that will be maintained by a property owner's association, the Planning Commission staff may recommend a modification of the requirements of the first part of this provisions to permit a channel designed in keeping with landscaping architectural plans, providing all hydraulic requirements to support the overflow resulting from a one hundred (100) year frequency rainfall are met in such a manner as to

prevent flooding of all building pads and the modifications are approved by the City Engineer.

Sec. 6-5007. Design Criteria for Improvements – Storm Drain.

a. Bridge and Culvert Requirements: All flow of water across continuous streets or alleys shall be through culverts or bridges. Bridges and culverts shall be sized to accommodate a fifty (50) year frequency rain, without increasing the depth of flow in the channel. Design of bridges and culverts shall conform to the current South Carolina State Highway Department construction specifications.

b. Closed Storm Sewers: Closed storm sewers shall be constructed of precast or prefabricated pipe or built in place of closed box design to conform with City construction specifications. Sizing shall be calculated by the Manning Formula; provided that storm sewers carrying runoff from streets may be designed to serve a ten (10) year frequency rain for the drainage area involved, provided that overflow from a one hundred (100) year frequency rain can reach a suitable outlet without inundating any building pad.

c. Open Paved Storm Drainage: Open paved storm drainage channels shall be constructed in accordance with City specifications. Side slopes above the paved section shall be shaped and sodded on a slope of three horizontal to one vertical (3:1) or flatter. Fences shall not be erected closer than one (1) foot (measured horizontally) to the edge of the paved section.

Sec. 6-5008. Drainage Areas Outside of Channel Easement – Storm Drain.

The City Engineer shall require improvements to preclude any backup of tail water inundating any areas outside of the dedicated drainage easement in the subdivision or development as a result of a fifty (50) year frequency flood or which might inundate a building pad which is one (1) foot above the one hundred (100) year frequency flood elevation.

Sec. 6-5009. Administration – Storm Drain.

Prior to authorization of any building permit by the Building Official, the City Engineer shall review and approve all such stream flow and storm runoff calculations as he may require of a developer under the terms of this ordinance; and the City Engineer shall have authority to resolve differences in engineering interpretations of all required fifty (50) and one hundred (100) year flood elevations necessary to this ordinance.

Sec. 6-5010. Violation – Storm Drain.

The violation of this ordinance shall be a misdemeanor.

Sec. 6-5011. Conflict with Other Laws – Storm Drain.

Whenever the provision of this Article imposes more restrictive standards than required under any other ordinance, the standards herein contained shall prevail. Whenever the

provisions of any other ordinance require more restrictive standards than are required herein, the requirements of such other ordinance shall prevail.

Sec. 6-5012. Flood Plan Exemption – Storm Drain.

The provisions of this chapter shall not apply within the established regulatory flood plain as shown on the flood boundary and floodway maps filed with the City Engineer by the Federal Insurance Administration of the Federal Emergency Management Agency on March 6, 1981. (Ord. No. 81-11, 3/25/81).

Sec. 6-5013. APPROVED PLAN AND PERMIT REQUIRED FOR LAND DISTURBANCE – SEDIMENT AND EROSION COTROL

Unless otherwise provided in this ordinance, the surface of land in Columbia shall not be disturbed or changed for any purposes whatsoever, but not including those exemptions outlined in Section 6-5014, except in accordance with an erosion and sedimentation control plan approved by the City Engineer prior to any grading, construction or land disturbance of any nature. The permit shall be valid for a period of two years.

Sec. 6-5014 EXEMPTIONS – SEDIMENT AND EROSION CONTROL

The provisions of this ordinance shall not apply to:

(1) Agricultural and silvicultural land management and cultural practices, or to the construction of on-farm buildings and structures used in a farming operation.

(2) Construction or land improvement of a single family residence or its accessory buildings. A single family residence property owner may make land improvements on his single lot without an approved erosion and sediment control plan and without obtaining a grading permit.

(3) Mining and mineral resource extraction operations conducted in accordance with a valid minim permit issued by the Mining and Reclamation Division of the South Carolina Land Resources Commission.

(4) Emergency repairs or maintenance of existing structures and facilities which requires ground to broken. The responsible person shall notify the City Engineer in writing within five working days of such emergency repairs and maintenance actions.

(5) Construction or land improvement by a state or federal agency conducted in accordance with a state or federal land management program.

(6) Construction of transmission lines for electricity, water, telephone, gas, sanitary sewers, storm sewers, and other utilities which require disturbance of less than two (2) acres of natural ground surface.

(7) Construction by public service districts, utility companies, Lexington or Richland County, and the City of Columbia when plans for such construction or improvements include a sedimentation control plan which is certified by a

registered professional engineer or architect to be in conformity with this ordinance. Plans may be certified by a registered landscape architect or Tier B land surveyor as empowered by State law.

Sec. 6-5015. APPLICATION FOR PLAN APPROVAL AND PERMIT – SEDIMENT AND EROSION CONTROL

The developer or his representative must submit seven (7) copies of an erosion and sediment control plan prepared in accordance with Section 6-5-23 – Section 6-5025 of this ordinance to the staff of the Columbia Planning Commission. The plan shall be certified to be in conformity with the ordinance by the applicant and by a registered professional engineer or architect. A registered landscape architect or Tier B land surveyor may certify plans as empowered by State Law. The plans must be accompanied by application in writing to the City Engineer for a grading permit to disturb or change land in Columbia.

Sec. 6-5016. APPLICATION FEE – SEDIMENT AND EROSION CONTROL

Applications for plan approval and a grading permit shall be accompanied by a non-refundable fee, payable to the City of Columbia. The amount of the application fee shall be determined according to an established schedule. Please see the land disturbance fee schedule on the updated amendment..

Sec. 6-5017. APPROVAL OR DISAPPROVAL OF APPLICATION – SEDIMENT AND EROSION CONTROL

(a) The Columbia Planning commission shall forward two copies of the erosion and sediment control plan to the City Engineer. If the plan conforms with the requirements of this ordinance, the City Engineer shall issue the grading permit to the applicant.

(b) If the erosion and sediment control plan does not conform with the requirements of this ordinance, the plan shall be disapproved and the City Engineer shall not issue the grading permit. Written notice of denial of the permit, indicating the reason or reasons for plan disapproval, shall be forwarded to the applicant.

(c) Review of erosion and sediment control plan shall be completed within thirty (30) days or less from the date of submittal until the time a decision is rendered, either approving or disapproving the plan. If, at the end of the thirty (30) day period, a decision has not been rendered, the plan shall be deemed approved and a grading permit issued on demand.

(d) If an erosion and sediment control plan is disapproved and the grading permit denied, the applicant may elect to revise the plan to conform with the provisions of this ordinance and resubmit the application and plan. No additional application fee shall be required for such resubmissions.

(e) The start of actual construction must be schedule with the City Engineer.

Sec. 6-5018. VARIANCES AND EXCEPTIONS – SEDIMENT AND EROSION CONTROL

(a) The City Engineer shall have the authority to grant variances and exceptions to any of the provisions of this ordinance in response to application to him showing undue

hardship. Such variance or exception must be in harmony with the general purpose and intent of this ordinance.

(b) The City Engineer may waive the requirements of Section 6-5015 if he determines that the square footage of the area to be disturbed is negligible and the nature of the disturbing activity is inconsequential. Such waiver shall not waive compliance with the other provisions of this ordinance.

Sec. 6-5019. APPEALS – SEDIMENT AND EROSION CONTROL

(a) Any person aggrieved by any decision of the City Engineer under this Ordinance may appeal to the Planning Commission within sixty (60) days upon written notice to the Secretary of the Planning Commission.

(b) Any person aggrieved by the decision on an appeal to the Planning Commission may appeal to the court of competent jurisdiction, which shall hear the same. Such appeal shall be filed within thirty (30) days after the Planning Commission decision.

Sec. 6-5020. OTHER AUTHORIZATIONS OR REQUIREMENTS – SEDIMENT AND EROSION CONTROL

Where any other authorization, bonds or other sureties are required by applicable laws, regulations, ordinances or decisions of the City Engineer pertaining to any part of the proposed work to be done under the erosion and sediment control plan, the applicant shall, upon request, furnish the City Engineer with satisfactory evidence that such requirements have been met before the commencement of work under an approved plan and grading permit.

Sec. 6-5021. EXTENSION OF TIME – SEDIMENT AND EROSION CONTROL

If the applicant is unable to complete the work within the time specified in the approved plan and grading permit, he may, prior to the expiration of such time, present in writing a request to the City Engineer for an extension of time, setting forth the reasons for the requested extension. The City Engineer shall approve or deny the request for an extension of time and may make approval subject to such additional erosion and sediment control measures as may be reasonably required.

Sec. 6-5022. RESPONSIBILITY OF APPLICANT – SEDIMENT AND EROSION CONTROL

The applicant shall be responsible for carrying out the prepared work in accordance with the approved erosion and sediment control plan and grading permit, and in compliance with the requirements of this ordinance.

Sec. 6-5023. GUIDELINES FOR PREPARATION OF SEDIMENT AND EROSION CONTORL PLANS

Sediment and erosion control plans shall be prepared according to the following guidelines, as applicable, prior to submission to the City Engineer. Plans shall include appropriate measures and practices for erosion and sediment control, installed in a timely sequence during the development process, and maintained to insure their proper functioning.

(1) Tracts of land vary in suitability for development based on drainage patterns, topography, and soils. Consider the major characteristics of the land area and the kinds of soil in selecting appropriate control measures and practices.

(2) Expose the smallest practical area of land for the least possible time during development.

(3) When feasible, retain and protect natural vegetation. Save topsoil, where practical, for replacing on graded areas.

(4) Use temporary plant cover, mulching, and/or structures to control runoff and protect areas subject to erosion during construction.

(5) Provide for handling the increased runoff caused by changed soil and surface conditions. Emphasis shall be placed on conservation of existing on-site soil. Effective means include the use of diversion ditches, grasses or surfaced waterways and outlets, enlarged and protected drainage channels, grade control structures, and effective use of street gutters and storm sewers.

(6) Use sediment basins or other forms of silt traps, where practical, to remove heavy sediment loads from runoff waters leaving the disturbed area.

(7) Install the permanent vegetative cover and the long-term erosion protection measures or structures as soon as practical in the development process. (See Section 6-5024).

Section 6-5024. CONTENTS OF PLAN AND APPLICATION – SEDIMENT AND EROSION CONTROL

The sediment and erosion control plan and application for grading permit shall include, but not be limited to, the following data as applicable:

(1) A vicinity map at a scale of 1” = 1,000’ sufficient to locate the site and to show the relationship of the site to its general surroundings.

(2) A site plan, drawn to a scale of not less than 1” = 100’ on 24” x 36” sheets and supporting specifications and schedules showing:

(a) The boundary lines of the site on which the work is to be performed including the approximate acreage of the site.

(b) Existing contours with intervals of not more than five (5) feet. Contours shall extend 100 feet outside the side boundary lines unless waived by the City Engineer.

(c) Proposed physical improvements on the side including present development and future utilization, if known.

(d) All drainage provisions, flood protection provisions, erosion and sediment control measures, vegetative practices, or other protective devices to be utilized in connection with, or as a part of, the proposed work.

(e) Provisions for erosion control during construction (temporary) and during the life of the facility (permanent). Such provisions shall include a timing schedule and sequence of operations indicating the anticipated starting and completion dates of the particular development sequence, and the estimated time of exposure of each disturbed area prior to completion of effective erosion and sediment control measures. Specifications accompanying the plan shall include, as appropriate, seeding mixes and application rates, type of sod, seedbed preparation, lime and fertilizer application, mulching, and other related data.

(f) A complete and adequate grading plan for on-site borrow pits and material processing facilities, where applicable, including provisions for adequate drainage in such areas.

(g) A general description of the predominant soil types on the site.

(h) The name and address of the owner, developer, and petitioner, and the individual responsible for satisfactory completion of the work described in the plan, if different from the above.

(i) Title, scale, north arrow, date and signature of the individual or organization preparing the plan, with seal when applicable.

(j) The plan and application shall be supported by such supplemental reports, specifications, data, and additional information as the City Engineer may reasonably require, including but not limited to finished contours, elevations, dimensions, locations, slopes, storm drainage computations, and field investigation reports on soils, drainage, and flooding.

(3) Applicant's Certification Statement

"I (We) hereby certify that all clearing, grading, construction and/or development will be done pursuant to this plan."

_____ _____

Date Permit Applicant

(4) Design Certification Statement (Amended by Ordinance dated 4/1/92)

I hereby certify that this plan is designed to meet storm drainage requirements and to contain silt on the property concerned to the maximum extent feasible. Provisions for erosion and sediment control and storm drainage are in accordance with the Columbia Sediment and Erosion Control and Storm Drainage Ordinance.

_____ _____

Date Permit Applicant

Sec. 6-5025. PLAN SPECIFICATIONS AND REQUIREMENTS – SEDIMENT AND EROSION CONTROL

(a) All runoff water must be diverted away from all fill slopes or conveyed down the slope in a pipe or hard surface flume. Water and discharge is to be in a protected channel or

waterway. Pipe outlets must be protected to reduce velocity of water. Adjacent landowners must be protected from damage by discharge of storm water.

Sample criteria for the above is found in Soil Conservation Service (SCS) Handbook, Erosion and Sediment Control in Developing Areas, SCLRC.

(b) All diversions, waterways, dikes, dams, etc. in fact any structures installed must meet standards and specifications set forth in SCS Handbook, Erosion and Sediment Control in Developing Areas.

(c) Vegetation Plan for Disturbed Area

(1) Plantings or seedings as contained in the critical area Stabilization Section of SCS Handbook, Erosion and Sediment Control in Developing Areas, must be used.

Sec. 6-5026. ADMINISTRATION AND ENFORCEMENT – SEDIMENT AND EROSION CONTROL

(a) Inspection

The City Engineer of his authorized representative shall periodically inspect the work done under the approved plan and grading permit, as deemed advisable. Upon completion of such work, he shall make a final inspection to determine if the work has been completed in accordance with the plan and permit.

(b) Enforcement

When the City Engineer or his authorized representative finds that the work done or not done under any grading permit issued under the provisions of this ordinance fails to conform to the approved plan, he may, as he deems necessary, by written order direct conformance to the plan, to include the issuance of a written order to comply, to suspend work, or to revoke the permit issued, or seek redress through legal action, or to withhold the release of permanent electric power to the site.

(c) Violations and Penalties

(1) any person who willfully violates the provisions of Section 6-5013 through Section 6-5026 of this ordinance shall be deemed guilty of a misdemeanor, and upon conviction, shall be imprisoned for not more than six (6) months or fined not more than one thousand dollars ($1,000.00) or both.

(2) The governing body of the City of Columbia or its appointed agent may obtain injunctive relief to enjoin violations of the provisions of this ordinance and any person damaged as a result of such violations may, upon a proper showing of such damages, obtain payment therefore by a civil action.

Sec. 6-5027. RELATIONSHIP WITH OTHER LAWS, REGULATIONS, AND ORDINANCES – SEDIMENT AND EROSION CONTROL

Whenever the provisions of this ordinance impose more restrictive standards than are required in or under any other law, regulation, or ordinance, the requirements herein contained shall prevail. Whenever the provisions of any law, regulation, or ordinance require more restrictive standards than are required herein, the requirements of such law, regulation, or ordinance shall prevail.

The effective date of this ordinance is November 14, 1990.

Requested by:

_____ _____s/_____

Approved by:

_____ ATTEST:

City Manager

Approved as to form:

_____ _____s/_____

City Attorney City Clerk

Introduced _____

_____

Final Reading _____

SKETCH ILLUSTRATING STORM DRAINAGE ORDINANCE

1. FIRST INLET (UPSTREAM) IS PLACED AT THE POINT WHERE THE 25-YEAR FREQUENCY RAIN FILLS THE CURB AND GUTTER SECTION.
2. AT THAT POINT, THE 10-YEAR FREQUENCY RAIN IS TAKEN INTO PIPED STORM SEWER. ADEQUATE INLETS ARE PROVIDED DOWNSTREAM TO INSURE THAT THE 25-YEAR FREQUENCY RAIN DOES NOT OVER FLOW THE CURB AND GUTTER. THUS THE CURB AND GUTTER PLUS THE STORM SEWER AND INLET SYSTEM CARRIES THE 25-YEAR FREQUENCY RAIN.
3. 50-YEAR FREQUENCY STORM CONTAINED IN STREET RIGHT-OF-WAY OR CHANNEL EASEMENT.
4. 100-YEAR FREQUENCY FLOOD 1 FOOT BELOW AND 25 FEET FROM HOUSE PAD ELEVATION.

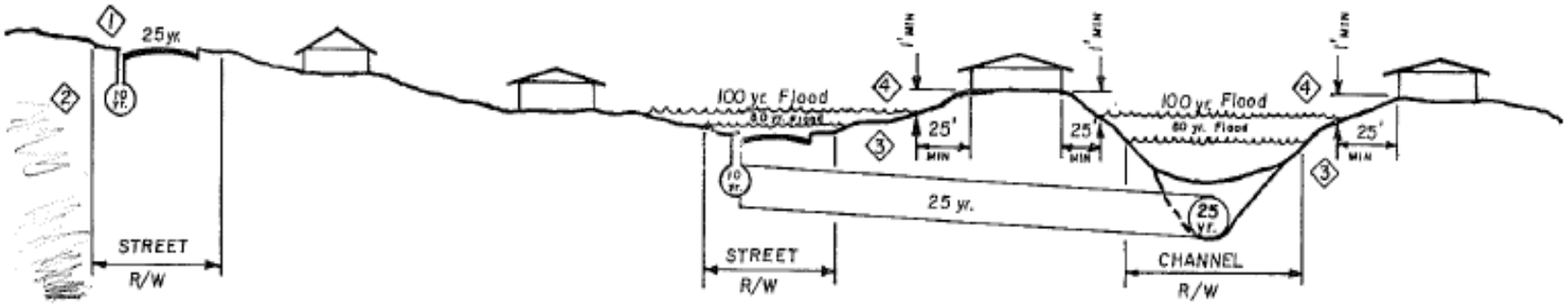

REPRODUCED FROM "MODEL ORDINANCE FOR STORM DRAINAGE SYSTEMS AND IMPROVEMENTS" PREPARED BY CENTRAL MIDLANDS REGIONAL PLANNING COUNCIL.

PART 5: SPECIFICATION FOR ROADWAY DESIGN
TABLE OF CONTENTS

Paragraph	Description	Page No.
5.1	General	5-1
5.2	Road System Design Criteria	5-1
5.3	Road Designation	5-2
5.4	Traffic Data	5-2
5.5	Subgrade Soil Support Value	5-3
5.6	Traffic Growth Rate	5-4
5.7	Coefficients of Relative Strength of Pavement Component Layers	5-4
5.8	Structural Number	5-4
5.9	Stage Construction	5-5
5.10	Pavement Thickness Design Methods	5-5
5.11	Parking	5-18
5.12	Drainage	5-18
5.13	Geometrics	5-18
5.14	Complete Streets	5-28

CITY OF COLUMBIA REGULATIONS
PART 5
SPECIFICATIONS FOR ROADWAY DESIGN

5.1 GENERAL

5.1.1 Roadways and sidewalks must be designed in accordance with current City, SCDOT, International Fire Code: Appendix D and ADA regulations. Roadways should be designed for the anticipated traffic density 20 years from the proposed date of construction. Special conditions such as long range planning studies, proposed zoning, industrial parks, proposed and future interstate facilities, etc., should be considered in the design. This section also includes design for existing streets and sidewalks that require repair or to be replaced.

5.1.2 Roadway Signing and Pavement Markings

5.1.2.1 Signing on public streets shall be provided by the developer, and shall include, but not be limited to, the following: Street Markers, Stop Signs, Yield Signs, and Warning Signs. The signing shall conform to the current Manual on Uniform Traffic Control Devices (MUTCD) published by the Federal Highway Administration.

5.1.2.2 Pavement markings shall be provided by the developer, and shall include, but not be limited to, the following: Stop Bars, Centerlines, Lane Lines, and Parking Spaces. The signing shall conform to the current MUTCD.

5.1.2.3 The developer shall submit a roadway signing and marking plan to the Public Works Department for review and approval.

5.2 ROAD SYSTEM DESIGN CRITERIA

5.2.1 In determining the required number of lanes, as well as pavement strength, the following factors shall be considered:

5.2.1.1 Road Designation

5.2.1.2 Traffic Data: DHV, ADT, Per cent of Trucks (T)

5.2.1.3 Soil Characteristics and Strength

5.2.1.4 Traffic Growth Rate

5.2.1.5 Pavement Strengths

5.2.1.6 Structural Number

5.2.1.7 Stage Development

5.2.1.8 Parking

5.2.1.9 Drainage

5.2.1.10 Geometrics

5.3 ROAD DESIGNATION: Road designation shall be one of the following:

5.3.1 Residential (minor/local)

5.3.2 Collector

5.3.3 Industrial or Commercial

5.3.4 Arterial

5.3.5 The designation of the above will be made by the City Engineer, based upon the functional classification map. Additionally, the designer may be required to incorporate the Complete Streets policy as described in Section 5.13 as dictated through the Developmental Services process.

5.3.6 The following right-of-way widths shall be minimum for each respective road designation:

5.3.6.1	Residential (minor/local)	50 feet
5.3.6.2	Collector -	60 feet
5.3.6.3	Industrial or Commercial	80 feet
5.3.6.4	Arterial -	100 feet

5.3.7 The following driving lane pavement widths shall be a minimum for each respective road designation, under the conditions described, and as shown in the Standard Road Sections.

5.3.7.1	Residential (minor/local)	27’ Back to Back of Curb
5.3.7.2	Collector -	36’ Face to Face of Curb
5.3.7.3	Industrial or Commercial	36’ Face to Face of Curb
5.3.7.4	Arterial -	52’ Face to Face of Curb

5.3.8 The designer shall discuss the parking conditions for each roadway with the Parking Director. Wider driving surfaces will be contingent upon the parking conditions and the traffic density.

5.4 TRAFFIC DATA – The following information will be provided for each proposed road improvement:

5.4.1 ADT, Average Daily Traffic, the daily traffic flow in both directions of travel, for a 24 hour period.

5.4.2 DHV, Design Hour Volume, the 30th highest hourly volume of the year is designated the DHV. If this information is not readily available DHV may be calculated at 12% of the ADT.

5.4.3 T, Percentage of Trucks, the quantity of trucks during the ADT or DHV, expressed as a percent of that total traffic. For the purpose here, light delivery trucks, such as panels and pick ups, are considered as passenger cars. In light of actual field data, T can be considered 10% on arterials, 5% on collector and residential. Special conditions must be discussed with the City Engineer for the industrial road designation.

5.4.3.1 Trucks shall be further identified as follows, during the actual traffic counting:

5.4.3.1.1 2DT – Unit truck, two axles

5.4.3.1.2 3SU – Unit truck, three axles

5.4.3.1.3 2S1 – Semi truck, two axles on cab, one axle on trailer

5.4.3.1.4 2S2 – Semi truck, two axles on cab, two axles on trailer

5.4.3.1.5 5AX – Truck with 5 axles or more

5.4.3.2 In lieu of the actual traffic count to determine T, and utilizing the percentage provided in Section 5.3.3 the following road designations shall contain the respective road groups as follows:

5.4.3.2.1 Residential (minor or local) – Road Group B

5.4.3.2.2 Collector – Road Group D

5.4.3.2.3 Arterial – Road Group G

5.4.3.2.4 Industrial or Commercial – Road Group J

5.4.4 Road group loads and their effect on pavement design as related to these road groups is as shown on Data Sheet 1 of the design sheets.

5.4.5 Average one-way ADT, or when the 20 year ADT is calculated based upon section 5.9.4, shall be as follows: In City – 55%, In near city suburbs (5. mile radius) – 65%.

5.4.6 Lane Factor – In two lane roads the total one way traffic factor is 1.0. In four lane roads the most heavily traveled lane will be the right most lane and a factor of 0.8 will be applied to the total one-way traffic. In six lane roads the most heavily traveled lane will be the right lane also, and a factor of 0.7 will be applied to the total one-way traffic.

5.5 <u>SUBGRADE SOIL SUPPORT VALUE</u> – In the case of proposed new construction, the soil support value of the subgrade soil will be provided by the triaxial shear test; modulus of deformation will be developed by laboratory testing and correlated with the accompanying oil support scale to provide these data.

This value is requested also for staged road work (overlays) and road widening work. In lieu of an actual soils evaluation, a value of 1.50 may be used for the value of S.

5.6 TRAFFIC GROWTH RATE – A figure of 4% per year has been identified as the growth rate characterizing traffic within the United States. This figure should be used for forecasting anticipated ADT with the pavement design life. Other figures from local expertise are acceptable, when qualified as acceptable by the City Engineer.

5.7 COEFFICIENTS OF RELATIVE STRENGTH OF PAVEMENT COMPONENT LAYERS – The required thickness of a given layer or layers varies with their respective tensile strength. This strength is expressed in terms of a relative coefficient. The estimated values of coefficients of the pavement components used in AASHO Interim Guide for the Design of Flexible Pavement Structures and AASHO Road Test Equations Applied to the Design of Bituminous Pavements in Illinois are utilized in this standard. It is to be understood that these coefficients may change if and when future studies are made to more accurately evaluate their respective tensile strength. At that time the City Engineer will provide updated coefficients for incorporation with these standards.

5.7.1 The designer is to be aware that the minimum pavement thickness for the particular road designation is as follows and as shown in the standard road sections on Drawing #RD-1:

5.7.1.1	Residential (minor/local) -	1 ½" Asphaltic concrete surface course 6" Macadam base course 6" Compacted subgrade
5.7.1.2	Collector -	2 ½" Asphaltic concrete surface course 6" Macadam base course 6" Compacted subgrade
5.7.1.3	Industrial or Commercial -	4" Asphaltic concrete surface course 6" Macadam base course 6" Compacted subgrade
5.7.1.4	Arterial -	5 ½" Asphaltic concrete surface course 8" Macadam base course 6" Compacted subgrade

5.8 STRUCTURAL NUMBER (SN) – An index number derived from an analysis of traffic and design features which may be converted to pavement thickness. This is done through the use of suitable factors related to the type of material being used. This dimensionless number reflects the necessary thicknesses of the various road building courses, i.e., subbase, base course, binder and/or leveling course, surface course and existing surface course, and their respective coefficient of relative strength which when totaled together for the final pavement design must equal or exceed the SN.

5.9 STAGE CONSTRUCTION – Various items of road construction such as pavement courses, lane requirements, for future traffic density, or other sequential work must have the approval of the City Engineer prior to acceptance by the City of Columbia.

5.10 PAVEMENT THICKNESS DESIGN METHODS – The following explains the use of Data Sheets 1, 2, and 3 accompanying the Road Design Standards. The two examples following this description should further elaborate upon the method of designing pavements. Without a pavement design sealed by a professional engineer, the minimum pavement thickness shall be 8" base and 3" of asphalt surface course and subbase and compaction requirements according to SCDOT 2007 (or latest edition) Standard Specifications for Highway Construction.

5.10.1 Sheet 1 is a summary of the traffic data, sheet 2 is a nomograph relating the soil support value and the equivalent daily 18 KIP single axle load application s to the Structural Number, and sheet 3 provides the coefficients of relative strength for flexible pavement components.

5.10.2 Most of the first two lines of Sheet 1 are obvious. The percent trucks (T), road and designation, and number of lanes are derived from the traffic count (ADT) and the design standards. In the event that this is to be a new road, this information will be obtained from the City Engineer. Section 5.3 of the Design Standards provides information in lieu of an actual traffic count.

5.10.3 With the results of the traffic count (ADT) columns 1 and 2 and the per cent trucks, (T) can be inserted. The 20 year figure is obtained from the design criteria or by the utilization of growth rates acceptable to the City Engineer.

5.10.4 The average one way ADT is derived from the design criteria, section 5.3.5, and is inserted in column 3. Average one way trucks, are computed to be T multiplied by column 3 with the result divided by 100 and then inserted in column 4. The truck weight, column 5, represents either the design criteria road group equivalent 18 KIP applications per 100 trucks, or a computed equivalent 18 KIP applications per 100 trucks. The design criteria road group is as shown in Table I. The computed value is calculated by utilizing the traffic count, and the percent trucks T, with the actual quantity of each respective truck designation as described in the design criteria. The number of trucks of each respective designation when multiplied by its equivalent 18 KIP per 100 vehicles of a type (Table II), and then divided by 100 will be the equivalent truck weight figure based on the traffic count (ADT).

5.10.5 Column 6 is obtained by multiplying Column 5 by Column 4. Column 7 is obtained by going to Table III and selecting the appropriate lane factor, based upon the number of lanes in the project. Column 8 is obtained by multiplying Column 7 by Column 6. Column 8 becomes one point on the nomograph on Data Sheet 2, and is plotted as the equivalent daily 18 KIP single axle load applications.

5.10.6 The Soil Support Value, or the modulus of deformation is obtained through a soils test and is a measure of the bearing strength of the supporting subgrade under the pavement components. In lieu of a field test the value in the design criteria may

be employed for S. The triaxial shear test is utilized for the field determination of the value of S, or the modulus of deformation, and becomes the second point on the nomograph shown on data sheet 2, under its appropriate scale shown.

5.10.7 The two points described in the preceding paragraphs describe a straight line, which is extended to intersect with the line segment designated SN on Data Sheet 2. The value of SN is obtained and used as a total pavement strength measure, which is to be equaled or exceeded by the total of the respective pavement section strengths. This formula employed is $SN = T_1a_1 + T_2a_2 + T_3a_3 + T_4a_4$

5.10.7.1 T_1 = thickness of surface bituminous courses, in inches

5.10.7.2 T_2 = thickness of surface course, in inches

5.10.7.3 T_3 = thickness of base course, in inches

5.10.7.4 T_4 = thickness of subbase course, in inches

5.10.7.5 A1, a2, a3, a4 = Coefficients of Relative Strengths which are obtained from Data Sheet 3 accompanying this example.

5.10.8 When the aforementioned equation computes to equal or exceed the SN obtained from the nomograph, the design pavement is valid and may be proposed. The designer should verify that the minimum asphaltic thickness, 1 ½", has been used in the surface courses and that the minimum pavement thickness for each component or its equivalent is in accord with that established for its respective road designation.

5.10.9 Example 1. Twenty-four hour traffic count (ADT) from the field reflects the following: 4,650 vehicles, of which there were 284 trucks, in the classification as follows: 2DT-243, 3SU-28, 2S1-10, 2S2-3, 5AX-0. A soils test indicates a Soil Support Value of 2.25.

5.10.10 Prior to starting calculations, note that the ADT indicates the road will carry a designation of either a collector or arterial road. Minimum Collector standards are paving width 36' F to F of curb, 2 ½" asphaltic concrete surface course, 6" macadam base course, 6" compacted subbase course. Minimum arterial standards are paving width 52' F to F of curb, 5 1/2" asphaltic concrete surface course, 8" macadam base course and 6" compacted subbase course. Discussion should be held with the City Engineer to determine the appropriate road designation.

5.10.11 The % trucks T is 284 / 4650 = 0.061 or 6.1%. The ADT for the next 20 years, based upon 4% annual growth, is approximate 1.8 times 4650 = 8370, 8370 x .061 = 511 trucks. This example will assume the road has been designated as an in-City Collector, and will be two lanes. The average one way ADT factor is obtained from Table IV with this information the traffic on one lane will be 0.55 x 4650 or 2558 presently, 0.55 x 8370 or 4604 in 20 years. This data is inserted in Column 3.

5.10.12 The truck percentages for each respective designation are changed by the same amount, 0.55 x 243 – 133.6 2DT, 0.55 x 28 – 15.4 3SU, 0.55 x 10 – 5.5 2S2, 0.55

x 3 – 1.65 2S2, and 0.55 x 0 – 05AX. Note the total trucks 133.6 + 15.4 + 5.5 + 1.65 = 156.15 approximately equal to 0.55 x 284. These figures are inserted in column 4. At this point the example continues with present day figures for the calculations. To calculate the truck weight we compute the following, utilizing Table II of data sheet 1 and the approximate quantity of each respective truck designation.

5.10.12.1 $\frac{133.5}{156.15}$ x 17.83 = 15.26

5.10.12.2 $\frac{15.4}{156.15}$ x 62.69 = 6.18

5.10.12.3 $\frac{5.5}{156.15}$ x 76.91 = 2.71

5.10.12.4 $\frac{1.65}{156.15}$ x 109.88 = 1.16

5.10.12.5 $\frac{0}{156.15}$ x 109.14 = 0

5.10.13 Totals 25.31 equivalent 18 KEP applications per 100 trucks. This value becomes the truck weight, Column 5.

5.10.14 Column 6, adjusted trucks, reflects the product of truck weight, Column 5, times the average one way trucks, Column 4, divided by 100 since the truck weight is predicated upon 18 KIP load applications per 100 trucks. This calculates to 25.31 x 156 / 100 or 39.5 and is inserted in Column 6.

5.10.15 Since this is tow lane the total one way factor is unity, from Table III and shown in Column 7. Critical lane traffic Column 6 times Column 7, 39.5 x 1.0 = 39.5.

5.10.16 Use 39.5 as one point to plot the equivalent daily 18 KIP single axle load applications, and plot the soil support value of 2.25 as a second point. The resulting straight line intersects a Structural Number (SN) of 3.49, as shown on data sheet 2.

5.10.17 Depending upon the engineering criteria involved in the road design, i.e., earth work, haul, etc., and utilizing the Coefficients of data sheet 3, the first attempt at a pavement design may be to employ an asphaltic concrete surface course of 4" times its Coefficient, resulting in SN of 3.49 = 4" x 0.44 + a_2 t_2 = a_3T_3 or a_2T_2 + a_3T_3 = 1.73, (3.49 – 1.76); the 6" compacted subbase can be brought in from the quarry and calculates to 0.12 x 6" or 0.72 thus SN = 1.76 + 0.72 + a_2T_2 or a_2T_2 = 1.01 to be made up in the base course. An average hot laid sand asphalt base course with a Coefficient 0.225 will result in 1.01 / 0.225 or 4.49 of base, say 4 ½". The final equation reads a_1 T_1 + a_2 T_2 +a_2 T_3 = SN, or 1.76 + 0.72 +1.02 = 3.50, approximately equal to the 3.r9 required. Obviously various multiples of pavement structures could be utilized to compute the required Structural Number (SN) and the appropriate pavement design.

5.10.18 The SN for the collector's minimum standards is 2.51. The designer is encouraged to compute the required pavement design based upon the 20 year ADT, and the minimum design standard SN of 2.51. Sheet 1 and 2 of example 1 reflects the SN, extended for 20 years, and the designer should observe the change in Structural Number (SN) is only 0.24 or less than 1" of asphaltic concrete, for this particular example (3.73 – 3.49 = 0.24), and 1" of asphaltic concrete has a coefficient of 0.44.

5.10.19 Example 2. This example illustrates a road serving a small subdivision, to be constructed in the future. No traffic counts are available. However, a soils study indicates a Soils Support Value of 1.75. The City Engineer, in conjunction with the Traffic Department, indicates an anticipated ADT of 437 vehicles for this type of in-city subdivision road at its proposed location, and designates the road as residential.

5.10.20 The following is an analysis for present day values only, with the 20 year figure left as an exercise for the designer:

5.10.20.1 From the design criteria section 5.3.3 the % trucks (T) is fixed to be 5% and the truck weight is determined to be Road Group B, section 5.3.3.2. Column 2 is thus 437 vehicles; Column 3 is 437 x .55 or 240 vehicles. The .55 reflects the maximum single lane per cent of the ADT. Column 4 is 240 x .05 or 12.00 trucks. Truck weight is determined as 23.14 equivalent 18 KIP applications per 100 trucks, from Table I, and is Column 5. Column 6 is based upon 100 trucks; since we have 12 trucks it is computed to be 9.12 x 23.14 = 2.78. Since there are only two lanes the lane factor, column 7 is unity and Column 8 become 1 x 2.78 = 2.78. This value, along with the Soil Support Value (S) of 1.75 from the soils test, establish the two points on the nomograph data sheet 2, which establishes a Structural Number (SN) of 2.42.

5.10.21 Utilizing data sheet 3, with the tabulated coefficients it appears as though an extra inch of hot laid asphalt concrete over the minimum is required. These computations are $a_1 T_1 + a_2 T_2 + a_3 T_3 = SN$ or .44 x 2 ½" + .16 x 6" + .075 x 6" or 1.10 + 0.96 + 0.45 = 2.51. 2.51 being greater than 2.42 makes the design valid.

5.10.22 The reason for the initial estimate of an additional inch of hot laid asphalt concrete is that the minimum standards for a residential road designation result in Structural Number (SN) of 2.07. Also note that average values of the Coefficient a 2 and a3 have been used (See data sheet 3), in this calculation. It may be feasible to utilize the top grade of material in the subbase and top grade macadam base material with a resulting value of $a_2 T_2$ equal to 6" x 0.20 or 1.20 for the base, and $a_3 T_3$ equal to 6" x 0.10 or 0.60 for the subbase leaving 2.42 – 0.60 – 1.20 equal to 0.62 for the hot laid asphalt concrete which allows the minimum thickness of 1 ½" to suffice, (ie. 1 ½" x 0.44 = 0.66, greater than 0.62).

5.10.23 Other combinations of pavement components can be utilized to make up the value of SN. This is left to the discretion of the designer.

TRAFFIC DATA FOR PAVEMENT LOADING

ROAD _____ DESIGNATION _____ FROM _____ TO _____

T% TRUCKS _____ PAVEMENT TYPE _____ NO. OF LANES _____ DATE _____

1 ADT	2 DESIGN PERIOD	3 AVERAGE ONE-WAY ADT	4 ONE-WAY TRUCKS	5 TRUCK WEIGHT	6 ADJUSTED TRUCKS	7 LANE FACTOR	8 ONE-WAY EQUIV. DAILY 18 KIP SINGLE AXLE LOAD APPLICATION

TABLE I

ROAD GROUP	DISTRIBUTION BY TYPE					EQUIV. 18 KIP APP PER 100 TRUCKS	
	2DT	3SU	2S1	2S2	5AX	FLEXIBLE	RIGID
B	92.9	1.6	1.4	2.7	1.4	23.14	25.71
D	86.5	0.6	3.1	5.2	4.6	28.92	34.44
G	71.7	6.5	2.4	12.5	6.8	39.97	52.11
J	54.0	6.8	3.5	20.2	15.5	55.70	77.30

TABLE II

EQUIV. 18 KIP APP PER 100 VEHICLES OF A TYPE		
VEHICLE TYPE	FLEXIBLE	RIGID
2DT	17.83	17.75
3SU	62.69	101.52
2S1	76.91	76.84
2S2	109.88	145.54
5AX	109.14	185.32

TABLE III

NO. OF LANES	LANE FACTOR
2	1.0
4	0.8
6	0.7

TABLE IV

AVERAGE ONE-WAY ADT FACTOR	
IN CITY	0.55
NEAR CITY (~5 MI)	0.65

COLUMBIA ENGINEERING DEPARTMENT

SOIL SUPPORT VALUE _____

DATA SHEET NO. 1

DATA SHEET NO. 1 EXAMPLE #1

TRAFFIC DATA FOR PAVEMENT LOADING

ROAD RICHLAND DESIGNATION COLLECTOR FROM _____ TO _____

T% TRUCKS 6.1 PAVEMENT TYPE FLEXIBLE NO. OF LANES 2 DATE _____

1 ADT	2 DESIGN PERIOD	3 AVERAGE ONE-WAY ADT	4 ONE-WAY TRUCKS	5 TRUCK WEIGHT	6 ADJUSTED TRUCKS	7 LANE FACTOR	8 ONE-WAY EQUIV. DAILY 18 KIP SINGLE AXLE LOAD APPLICATION
4650	11-4-77	2558	1.56	25.31	39.5	1.0	39.5
8370	20 YR	4604					

TABLE I

ROAD GROUP	DISTRIBUTION BY TYPE					EQUIV. 18 KIP APP PER 100 TRUCKS	
	2DT	3SU	2S1	2S2	5AX	FLEXIBLE	RIGID
B	92.9	1.6	1.4	2.7	1.4	23.14	25.71
D	86.5	0.6	3.1	5.2	4.6	28.92	34.44
G	71.7	6.5	2.4	12.5	6.8	39.97	52.11
J	54.0	6.8	3.5	20.2	15.5	55.70	77.30

TABLE II

EQUIV. 18 KIP APP PER 100 VEHICLES OF A TYPE		
VEHICLE TYPE	FLEXIBLE	RIGID
2DT	17.83	17.75
3SU	62.69	101.52
2S1	76.91	76.84
2S2	109.88	145.54
5AX	109.14	185.32

TABLE III

NO. OF LANES	LANE FACTOR
2	1.0
4	0.8
6	0.7

TABLE IV

AVERAGE ONE-WAY ADT FACTOR	
IN CITY	0.55
NEAR CITY (~5 MI)	0.65

SOIL SUPPORT VALUE 2.25 JAR

COLUMBIA ENGINEERING DEPARTMENT

DATA SHEET NO. 1 EXAMPLE # 2

TRAFFIC DATA FOR PAVEMENT LOADING

ROAD RICHLAND DESIGNATION RESIDENTIAL FROM _____ TO _____

T% TRUCKS 5.0 PAVEMENT TYPE FLEXIBLE NO. OF LANES _____ DATE _____

1 ADT	2 DESIGN PERIOD	3 AVERAGE ONE-WAY ADT	4 ONE-WAY TRUCKS	5 TRUCK WEIGHT	6 ADJUSTED TRUCKS	7 LANE FACTOR	8 ONE-WAY EQUIV. DAILY 18 KIP SINGLE AXLE LOAD APPLICATION
437	11-4-77	240	0.12	23.14	2.78	1.0	2.78

TABLE I

ROAD GROUP	DISTRIBUTION BY TYPE					EQUIV. 18 KIP APP PER 100 TRUCKS	
	2DT	3SU	2S1	2S2	5AX	FLEXIBLE	RIGID
B	92.9	1.6	1.4	2.7	1.4	23.14	25.71
D	86.5	0.6	3.1	5.2	4.6	28.92	34.44
G	71.7	6.5	2.4	12.5	6.8	39.97	52.11
J	54.0	6.8	3.5	20.2	15.5	55.70	77.30

TABLE II

EQUIV. 18 KIP APP PER 100 VEHICLES OF A TYPE		
VEHICLE TYPE	FLEXIBLE	RIGID
2DT	17.83	17.75
3SU	62.69	101.52
2S1	76.91	76.84
2S2	109.88	145.54
5AX	109.14	185.32

TABLE III

NO. OF LANES	LANE FACTOR
2	1.0
4	0.8
6	0.7

TABLE IV

AVERAGE ONE-WAY ADT FACTOR	
IN CITY	0.55
NEAR CITY (~5 MI)	0.65

SOIL SUPPORT VALUE 1.75

COLUMBIA ENGINEERING DEPARTMENT

DATA SHEET NO. 2

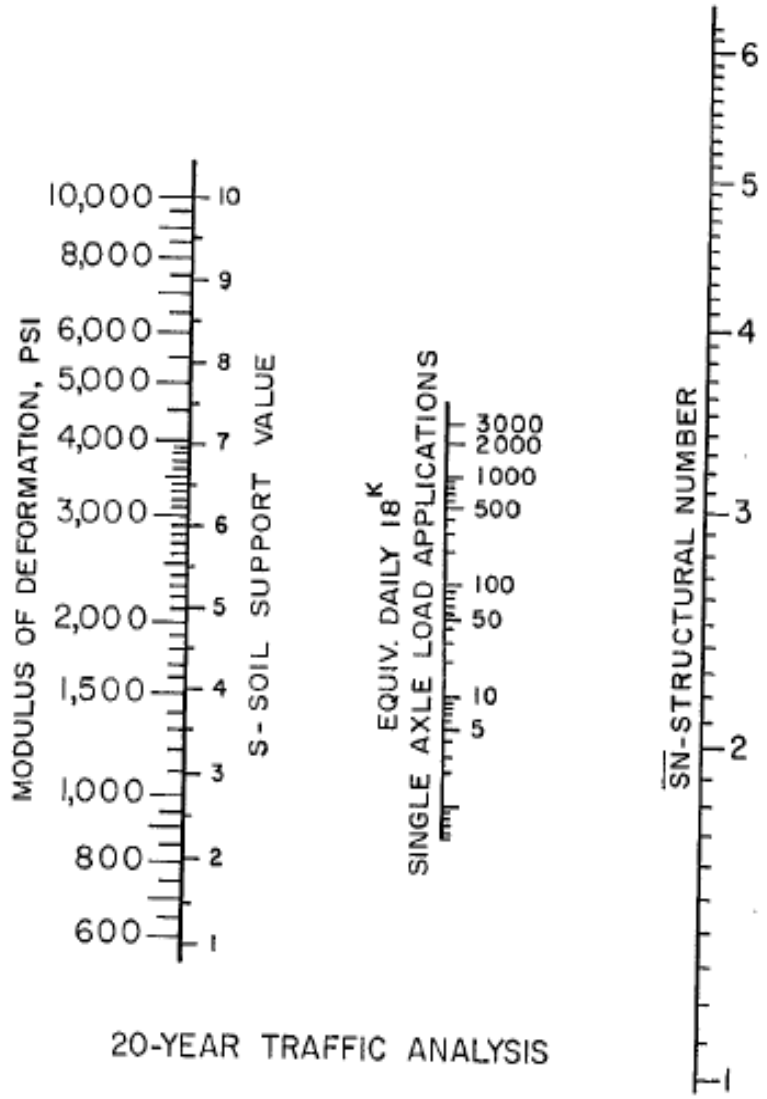

20-YEAR TRAFFIC ANALYSIS

DESIGN CHART

COLUMBIA ENGINEERING DEPARTMENT

DATA SHEET NO. 2 EXAMPLE # 1

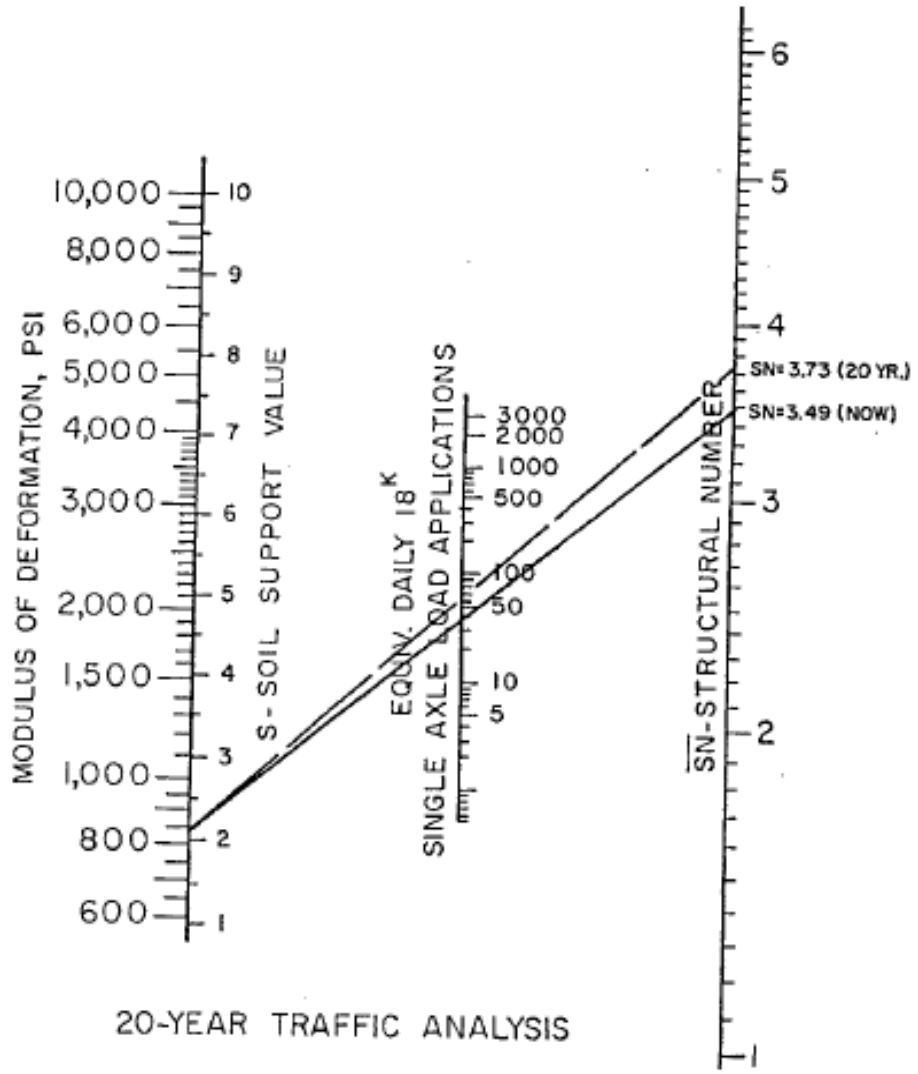

20-YEAR TRAFFIC ANALYSIS

DESIGN CHART

COLUMBIA ENGINEERING DEPARTMENT

DATA SHEET NO. 2 EXAMPLE # 2

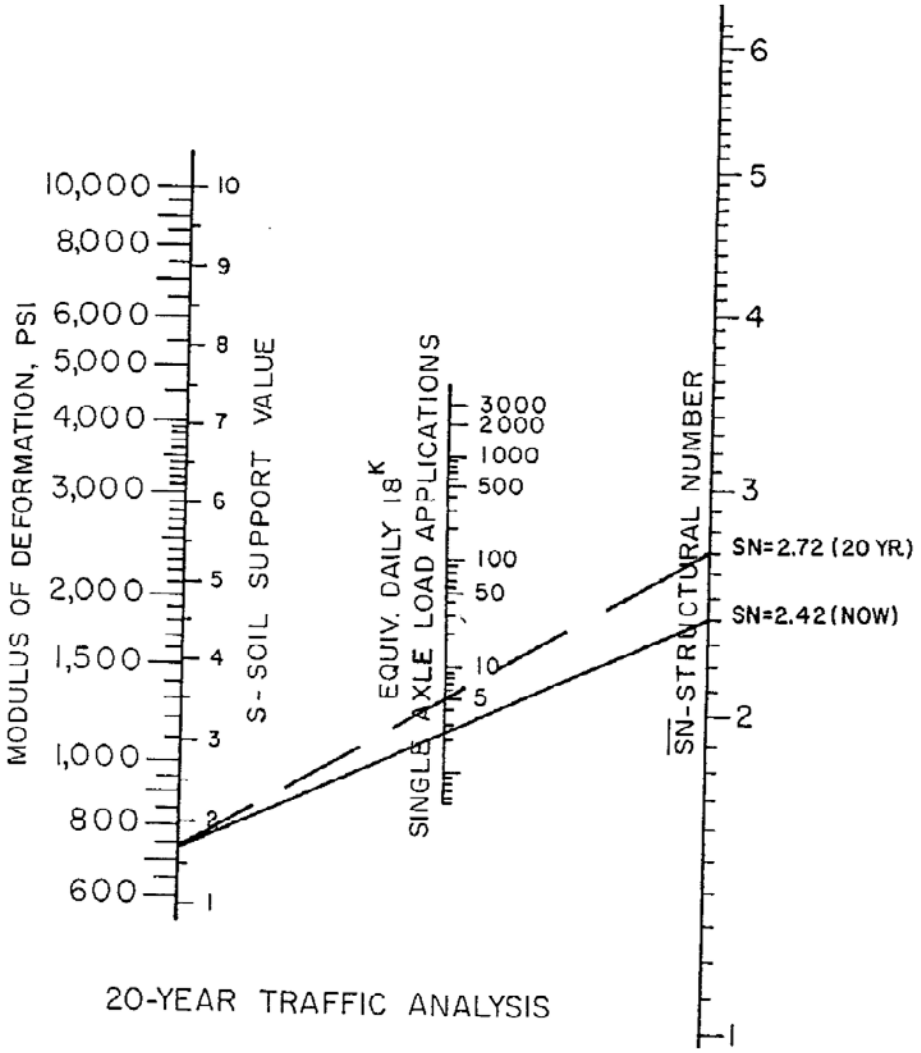

20-YEAR TRAFFIC ANALYSIS

DESIGN CHART

COLUMBIA ENGINEERING DEPARTMENT

DATA SHEET 3

COEFFICIENTS OF RELATIVE STRENGTH FOR
FLEXIBLE PAVEMENT COMPONENTS

Pavement Components	Coefficients		
	a_1	a_2	a_3
Surface Course			
Hot Laid Asphaltic Concrete Surface		0.44	
Hot Laid Asphaltic Concrete Binder		0.44	
Bituminous Surfacing		0.35	
Old Surface			
Old asphalt concrete surface course		0.26	
Old asphalt concrete binder course		0.26	
Old sand asphalt		0.21	
Bituminous Surfacing		0.21	
Base			
Earth Type Base Course (Grd. Surf. Material)			0.08 - 0.12*
Earth Type Base Course (Pit Material)			0.12 - 0.20*
Macadam Base Course			0.12 – 0.20*
Cement Stablized Earth Base Course			0.20
Hot Laid Asphalt Base Course			0.20 – 0.25*
Stabilized Aggregate Base Course			0.12 – 0.20*
Hot Laid Asphalt Aggregate Base Course			0.34
Cement Stabilized Aggregate Base Course			0.34
Old PCC Pavement			0.40
Subbase			
Earth Type Subbase Course (Grd. Surf. Material)			0.05 – 0.10*
Earth Type Subbase Course (Pit Material)			0.08 – 0.12*
Soil Aggregate Subbase Course			0.08 – 0.12*
Cement Stabilized Earth Subbase			0.15

(*) Coefficient dependent on quality of material available.

Note: In general, in computing SN for resurfaced flexible pavements, the coefficient for the former surface be no greater than 0.6 of its original value, that for the former base be no greater than 0.7 of its original value, and that for the former subbase be no greater than 0.8 of its original value.

DATA SHEET 3 – EXAMPLE 1

COEFFICIENTS OF RELATIVE STRENGTH FOR
FLEXIBLE PAVEMENT COMPONENTS

Pavement Components	Coefficients		
	a_1	a_2	a_3
Surface Course			
Hot Laid Asphaltic Concrete Surface		0.44	
Hot Laid Asphaltic Concrete Binder		0.44	
Bituminous Surfacing		0.35	
Old Surface			
Old asphalt concrete surface course		0.26	
Old asphalt concrete binder course		0.26	
Old sand asphalt		0.21	
Bituminous Surfacing		0.21	
Base			
Earth Type Base Course (Grd. Surf. Material)			0.08 - 0.12*
Earth Type Base Course (Pit Material)			0.12 - 0.20*
Macadam Base Course			0.12 – 0.20*
Cement Stablized Earth Base Course			0.20
Hot Laid Asphalt Base Course			0.20 – 0.25*
Stabilized Aggregate Base Course			0.12 – 0.20*
Hot Laid Asphalt Aggregate Base Course			0.34
Cement Stabilized Aggregate Base Course			0.34
Old PCC Pavement			0.40
Subbase			
Earth Type Subbase Course (Grd. Surf. Material)			0.05 – 0.10*
Earth Type Subbase Course (Pit Material)			0.08 – 0.12*
Soil Aggregate Subbase Course			0.08 – 0.12*
Cement Stabilized Earth Subbase			0.15

(*) Coefficient dependent on quality of material available.

Note: In general, in computing SN for resurfaced flexible pavements, the coefficient for the former surface be no greater than 0.6 of its original value, that for the former base be no greater than 0.7 of its original value, and that for the former subbase be no greater than 0.8 of its original value.

DATA SHEET 3 – EXAMPLE 2

COEFFICIENTS OF RELATIVE STRENGTH FOR
FLEXIBLE PAVEMENT COMPONENTS

Pavement Components	Coefficients		
	a_1	a_2	a_3
Surface Course			
Hot Laid Asphaltic Concrete Surface		0.44	
Hot Laid Asphaltic Concrete Binder		0.44	
Bituminous Surfacing		0.35	
Old Surface			
Old asphalt concrete surface course		0.26	
Old asphalt concrete binder course		0.26	
Old sand asphalt		0.21	
Bituminous Surfacing		0.21	
Base			
Earth Type Base Course (Grd. Surf. Material)			0.08 - 0.12*
Earth Type Base Course (Pit Material)			0.12 - 0.20*
Macadam Base Course			0.12 – 0.20*
Cement Stablized Earth Base Course			0.20
Hot Laid Asphalt Base Course			0.20 – 0.25*
Stabilized Aggregate Base Course			0.12 – 0.20*
Hot Laid Asphalt Aggregate Base Course			0.34
Cement Stabilized Aggregate Base Course			0.34
Old PCC Pavement			0.40
Subbase			
Earth Type Subbase Course (Grd. Surf. Material)			0.05 – 0.10*
Earth Type Subbase Course (Pit Material)			0.08 – 0.12*
Soil Aggregate Subbase Course			0.08 – 0.12*
Cement Stabilized Earth Subbase			0.15

(*) Coefficient dependent on quality of material available.

Note: In general, in computing SN for resurfaced flexible pavements, the coefficient for the former surface be no greater than 0.6 of its original value, that for the former base be no greater than 0.7 of its original value, and that for the former subbase be no greater than 0.8 of its original value.

5.11 PARKING - Parking geometry will be parallel to the flow of traffic, unless otherwise approved by the City Engineer.

5.12 DRAINAGE – Surface storm water facilities are covered under a different design section. Whenever preliminary borings for a proposed roadway, or construction of proposed underground utilities such as water, sanitary sewer, gas, telephone, electric lines, etc., indicated that water bearing soils will be encountered at, or below, grade where pavement components are to be installed, the minimum requirements will be for the installation of sub-surface section drains with appropriate filter material i.e., open graded drain rock blended with coarse concrete sand. The minimum size of section drain pipe will be 4", where short lengths of roadway, or gradual slopes (less than 10%) are to be constructed. Larger drains shall be installed as required.

5.12.1 Some standards of typical surface storm water facilities are included with these standards for road paving.

5.13 GEOMETRICS. This section addresses itself to the road features which provide safety and esthetics to the motoring public.

5.13.1 Design Hour Volume. As derived by actual traffic counts, or as calculated by the method in Section 5.3.2 the DHV may be utilized to determine the necessary number of traffic lanes, in accordance with the following Table 1:

TABLE 1
DESIGN CAPACITIES FOR ARTERIAL STREETS AND URBAN HIGHWAYS

Type of Highway	Design Capacity, Passenger Cars Per Hours Per 12-Foot Lane
Major Suburban Highway with Moderate Interference from Cross Traffic and Roadsides: Level of Service "C"	700-900
Major Suburban Highway, Considerable Interference from Cross Traffic and Roadsides: Level of Service "C"	500-700
Arterial Street, Traffic Signals Average One Mile Or More Apart, Parking Prohibited and Refuge Provided for Stalled Vehicles; Level of Service "C"	400-600
Arterial Street, Traffic Signals Less than One Mile Apart, Parking Prohibited	As Governed by Capacity of Intersections

5.13.2 Level of Service "C" for Urban and Suburban Arterials is defined as: service volumes about 0.80 of capacity with average overall travel speeds of 20 mph. Operating conditions at most intersections approximate load factor of 0.3. Peak hour factor is approximately 0.85. Traffic flow still stable with acceptable delays.

5.13.3 Sight Distance. The minimum safe stopping sight distances shall be as follows:

Residential	200 feet
Collector	275 feet
Industrial	275 feet
Arterial	300 feet

5.13.4 Stopping sight distance is measured from the driver's eye, 3.75 feet above the pavement center line to the top of an object 6" high on the pavement center line.

5.13.5 Intersection safe sight distances will correspond to the requirements in Table 2 below, pedicated upon the design speed.

TABLE 2
SUGGESTED CORNER SIGHT
DISTANCE AT INTERSECTIONS

Design Speed MPH	Minimum Corner Intersection Sight Distance, In Feet *
0	400
0	300
0	200

5.13.6 *Note: Corner Sight Distance is measured from a point on the minor road at least 15 feet from the edge of the major road pavement and measured from a height of eye of 3.75 feet on the minor road to a height of object of 4.5 feet on the major road. See figure VIII-5, page 398, "A Policy on Geometric Design of Rural Highways".

5.13.7 Intersection design shall allow no structures or growth that interferes with the driver's eye position when measured from a stopped vehicle on the minor roadway seeking to enter the major roadway.

5.13.8 Road Grades. Grades for streets in residential areas should be as flat as the consistent with the surrounding terrain. The gradient of residential streets should be less than 12% except in unusual terrain situations and desirably it should be less than 8%. On collector streets the gradient should be less than 10%, desirably it should be less than 7%. Where grades 4% or steeper are necessary, the drainage design may be critical. On such grades special care must be taken to prevent erosion on slopes and open drainage facilities as well as subsurface drainage.

5.13.9 For streets in industrial areas, gradient design should be less than 8%, desirably it should be less than 5% with emphasis on still flatter gradients.

5.13.10 In order to provide for proper drainage, the minimum grade that should be used for streets with outer curbing is 0.5%. A grade of 0.35% may be used where there is a high type pavement accurately crowned and supported on firm subgrade.

5.13.11 Although the grades indicated are permitted in extenuating circumstances, the maximum length of the grades that exceed the desirable will correspond to Table 3 below, for a speed reduction of 15 mph, and will apply to all road designations, except residential. See Section 5.12.18 regarding number of lanes.

TABLE 3

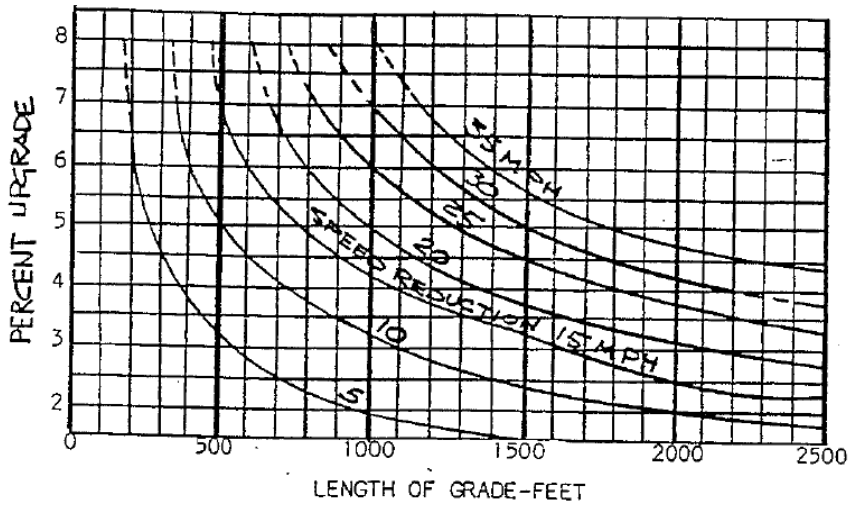

5.13.12 Alignment – Where deflection angle or more than ten (10) degrees occurs in the alignment of a marginal access or minor street or road, a curve of reasonable radius shall be introduced. A curve shall be introduced at any change in direction of a collector, industrial or arterial roadway. On arterials, the center line radius or curvature shall be determined by the City Engineer. On Collector and Industrial roads the center line radius or curvature shall not be less than four hundred (400) feet. On residential roads the center line radius of curvature shall not be less than one hundred fifty (150) feet.

5.13.13 Where curves are super elevated, lower values of the radius of curvature may apply. In no case will the residential radius of curvature be less than 115 feet, and the collector, or industrial radius of curvatures be less than 275 feet.

5.13.14 Elevation – Super elevation is advantageous for street operation. Super elevation should be provided on collector streets wherever operating speeds will not be low.

5.13.15 Where super elevation is used, street curbs should be designed for a maximum super elevation rate of 0.04 to 0.06 feet per foot. Minimum length or super elevation runoff is shown in Table 4.

TABLE 4
MINIMUM LENGTH FOR SUPERELEVATION
RUNOFF FOR 2-LANE PAVEMENTS

Superelevation Rate	L-Length of runoff in feet for Design Speed, MPH, of:				
	20	30	40	50	60
Feet Per Foot					
.02	50	100	125	150	175
.04	50	100	125	150	175
.06	50	110	125	150	175

5.13.16 For roadways greater than two lanes, the design will proceed as required by the City Engineer.

5.13.17 Pavement Crown – Pavement cross slope should be adequate to provide proper drainage. Cross slope normally should be as shown in Table 5 where there are flush shoulders adjacent to the travelway. Where there are outer curbs, cross slopes steeper by about a 1/16 to 1/8 inch per foot are desirable on the lane adjacent to the curb.

TABLE 5
NORMAL PAVEMENT OR SURFACING CROSS SLOPES

	Range in rate of cross slope	
Surface Type	Inch Per Foot	Foot Per Foot
High	1/8 – ¼	.01 -.02
Intermediate	3/16 – 3/8	.015 - .03
Low	¼ - ½	.02 - .04

5.13.18 Number of Lanes. Two moving traffic lanes plus additional width for curb and gutter, shoulders or parking are usually sufficient for most residential streets. On collector streets there should be provisions for four or more moving lanes except where the street is to be one-way in which case two moving lanes maybe the ultimate number that need be provided.

5.13.19 In industrial areas where there will be several mid-block left turns, it is recommended that an additional continuous two-way left turn lane in the center be provided.

5.13.20 The number of lanes to be provided on streets with a current ADT or 2,000 or more should be determined by highway capacity analysis of the design traffic volumes. Desirably such analysis should be made for future design traffic. Stage development may be considered for those streets on which four or more lanes for moving traffic is indicated.

5.13.21 On collector, arterial, and indiustrial road designations, where the design exceeds both the maximum slope and length and the actual traffic count indicates a T of more than 5% in the case of a collector, or more than 10% on arterials/industrial, a 12’ climbing clane is required for the maximum length of the pavement in the positive direction.

5.13.22 Median – Roadways designed for four or more lanes should include widths for appropriate median treatment whenever practical. There are substantial advantages for each increment in median width and it should be made as wide as practicable for the specific conditions. General types of street median treatment will need the following widths: (1) paint of stripe separations, 2 to 4 feet in width (2) narrow raised or curbed sections, 4 to 6 feet in width (3) paint striped or curbed sections providing space for separate left turn lanes, 14 to 18 feet in width.

5.13.23 On residential roads, median openings will be provided as necessary to serve abutting property and the traffic demand. They will be kept at a minimum. On collector streets, median openings will be provided at major street and minor street intersections and at reasonably spaced driveways serving motor traffic generators such as shopping centers. Median openings should be designed to include left turn lanes. Care should be taken to locate openings only where there is adequate sight distance.

5.13.24 Curbing – Roadways normally are designed with curbs for high utilization of available widths for control of drainage, protection of pedestrians, for delineation for a more finished appearance, for safety, and to assist in the orderly development of the roadside. The curb on the right of traffic should b 6” high.

5.13.25 On divided streets, the type of median curb should be determined in conjunction with the median width and the type of turning movement control to be affected. Where mid-block left turn movements are permitted and the median width is usually under 10 feet, a well delineated flush or rounded raised median separator 2” to 4” high is effective in channelizing traffic. This serves to avoid excessive travel distances and concentrations of turns at intersections. Where traver-sable wider medians are appropriate, they may be either flush or bordered with flat sloping lip curbs only a few inches high. On narrow and intermediate width medians and on some wide medians where cross median movements are undesirable or hazardous, a barrier curb should be used usually 6 to 8” high with a steep face. A high barrier curb or a central metal or high concrete barrier should be used with positive separation of opposing traffic is essential and there is no need for pedestrian crossings.

5.13.26 Steep faced curbs 6” or higher adjacent to moving traffic lanes should be offset from lane paving at least one foot. Where there is integral curb and gutter, construction, the gutter pan width, normally 12 to 18 inches, should be used as the offset distance.

5.13.27 Barrier or roll type curbing is acceptable upon approval of the City Engineer.

5.13.28 Manually poured in place (hand formed), extruded or precast curbing is acceptable. Curbing style is to be a harmonious match to the curbing already in existence in the surrounding environs. Where curbing does not exist in the surrounding environs the City Engineer will be the final authority on the requirement for the installation of curbing and the particular type.

5.13.29 Gutter will accompany all new curbing installations, with the following exception: Where existing curbing is curb only and no gutter, the designer is to verify the requirement for curbing with the City Engineer.

5.13.30 The accompanying standard illustrates acceptable types of curb and gutter. Other styles must be approved by the City Enginner.

5.13.31 Sidewalks – Sidewalks will be provided along both sides of roadways used for pedestrian access to schools, parks, shopping areas, transit stops and along all roadway with a commercial designation. In residential areas sidewalks will be provided on both sides of the roadway. The sidewalks should be located as far as practical from the traffic lanes; the outer edge of the sidewalk should be placed one foot from the property line, in the dedicated right-of-way. All new construction, addition or modification of sidewalks, driveways with through sidewalks and wheel chair ramps, must meet current ADA standards and SCDOT Standard Drawings No. 720-4 and 720-6; Located in the SCDOT Standard Drawings for Road Construction book.

5.13.32 The minimum width of sidewalk is to be five feet or current ADA requirements in Residentially zoned areas. Commercially zoned areas shall have a minimum width of sidewalk of six feet.

5.13.33 Border areas between the roadway and the sidewalk should be a minimum of four feet in width, ideally the border area should be eight to twelve feet in width. Any landscape areas located in the right of way must be approved by the Forestry and Beautification Superintendent prior to installation. Irrigation may be required depending on species and location.

5.13.34 Driveways – Driveways will be regulated as to the width of entrance, placement with respect to property lines and street intersections, vertical alignment, number of entrances to a single property, sight distance, drainage, parking, setback, lighting and signing and must be in accordance with SCDOT standards. The angle of entry shall be 90 degrees.

5.13.34.1 Driveways crossing sidewalks shall meet current ADA requirements.

5.13.35 Clearance to Obstructions – All roadways shall have a horizontal clearance of at least two feet between the face of curb, or edge of shoulder, and vertical obstructions, such as utility poles, fire hydrants, lighting poles, etc. Table 6 below reflects the effect of lateral clearance on lane capacity.

TABLE 6
EFFECTIVE ROAD WIDTH DUE TO RESTRICTED LATERAL CLEARANCES UNDER UNINTERRUPTED FLOW CONDITIONS

Clearance From Pavement Edge To Obstruction. Both Sides (Ft.)	Effective Width of Two 12-Ft Lanes (Ft)	Capacity of Two 12-Ft Lanes (% of Ideal)
6	24	100
4	22	92
2	20	83
0	17	72

5.13.36 Guardrail is not be used, except where there is hazard to motorists and pedestrians; such points as fixed objects along the pavement edge, fills on steep grades, long through fills, or fills on sharp curvatures; other pints especially hazardous are along water courses, escarpments, along deep ditches in cuts, particularly with rock exposed, and similar locations. The more dangerous points along a highway are obvious from the plans, but the overall need for guardrail is best determined by field inspection as the grading nears completion. The need for guardrails on fills is related to the slope. Generally they may be omitted where it is practicable to provide slopes of 4:1 or flatter. In some cases, it is economical to flatten embankment slopes to 4:1 or less instead of constructing guardrail, provided right-of-way is available. Where guardrail cost per linear foot is four times the cost of fill per cubic yard, it' generally more economical to flatten slopes from 2:1 to 4:1 on fills up to 15 feet in height. Saving in maintenance cost increases the fill depth at which it is economical to flatten slopes rather than use guardrail. However, where there is an accident prone situation, even with flat slopes, guardrails are usually warranted. The basic principle for the use of

guardrail to protect traffic from hazards is that guardrail will be used when the severity of an accident involving the hazard would be greater than the severity of an accident involving the protective guardrail.

5.13.37 Vertical clearance between the proposed center line of the road pavement and any elevated facility such as a bridge, walkway, tree limb, etc., shall be 15.0' minimum.

5.13.38 Intersection Design- Intersections, including median openings, should be designed with adequate corner sight distance (See Table 2) and the area kept free of obstacles. The corner sight distance for collector roadways will be a minimum of 300 feet and desirably should be 400 feet or more. For residential roadways the minimum corner sight distance will be 200 feet and desirably should be 300 feet or more. In order to maintain the minimum sight distance, restrictions on height of embankment, locations of buildings and screening fences may be necessary. Any landscaping in the sight distance triangle should be low growing with a maximum height that will not interfere with a passenger vehicle operator's line of sight.

5.13.39 It is desirable that intersecting streets meet at approximately a 90 degree angle. The alignment design should be adjusted so as to avoid an angle of intersection of less than 60 degrees. Closely spaced offset intersections are to be a minimum of 200 feet.

5.13.40 The intersection area and area where vehicles store while waiting to enter the intersection should be designed with a flat grad; the maximum grade on the approach leg should be no more than 5 percent.

5.13.41 Radii of 25 feet are adequate for passenger vehicles. These will be provided at residential streets where there is little occasion for trucks to turn, or at major intersections where there are parking lanes. Where the street has sufficient capacity to retain the curb lane as a parking lane for the foreseeable future, parking should be restricted for appropriate distances from the crossing.

5.13.42 Radii of 30 feet or more at collector streets should be provided where feasible so that a truck can turn without excessive lane encroachment.

5.13.43 Radii of 40 feet or more, and preferably three-centered compound curves or simple curves with tapers to fit the paths of appropriate design vehicles, should be provided where large truck combinations and buses turn frequently. Larger radii are also desirable where speed reductions would cause problems. This applies to the arterial and industrial road designations.

5.13.44 Radii dimensions should be coordinated with cross-walk distances or special designs to make crosswalks safer for pedestrians.

5.13.45 Corner curb radii on two-way streets have little effect on left turning movements. Where the width of an arterial street is equivalent to four or more lanes, generally there is no problem of encroachment by left turning vehicles.

5.13.46 Road Side Development – The tree categories of planting are: (a) Tree Planting – The primary purpose is aesthetic improvement in undeveloped areas where a higher type of planting is not justified and to preserve the naturalistic appearance by replacement of trees removed by construction; (b) Functional Planting – The primary purpose is erosion control, traffic safety, reduction of fire hazard or screening traffic from adjacent property, the aesthetic effect derived being of secondary benefit. (c) Landscaping – The primary purpose is aesthetic improvement of the right-of-way and the preservation of property values of adjacent development, the functional benefits thereby obtained being secondary. The City is not responsible for the maintenance of landscaped areas adjacent to individual properties or within a median/island unless specifically approved by the Superintendent of Forestry and Beautification. Such approval will not occur within residential areas.

5.13.47 As sight distance and safety are of primary importance, these considerations must not be subordinated to aesthetics. Applicable horizontal and vertical sight distance standards are set forth in 5.12.3 and 5.12.35. All planting shall be such that sight distances is equal to or greater than that required by the design standards for all intersections.

5.13.48 Proposed planting shall provide the initial or ultimate horizontal and vertical sight distance required by the design speed of the project. Particular attention should be paid to planting on the inside of curbs, in median areas and on cut slopes so that designed sight distances in the adjacent traffic lanes may be retained.

5.13.49 Shoulders – The shoulder portion of roadways serves a bifold purpose, namely: a) to accommodate stopped vehicles in emergencies; b) for lateral support of base and surface courses. Shoulder widths vary from about 2 feet on minor roads to about 12 feet or more on major roads, where the entire shoulder may be stabilized or have an all weather treatment.

5.13.50 As a general guide for developing design should widths, Table 7 will be useful;

TABLE 7
MINIMUM WIDTH OF USABLE SHOULDERS

	Design Volume		Usable Shoulder Width, Feet	
Current	ADT	DHV	Minimum	Desirable
50-250			4	6
250-400			4	8
400-750		100-200	6	10
		200-400	8	10
		over 400	8	12

5.13.51 Table 8 is provided as a general guide for the design of shoulder cross slopes.

TABLE 8
SHOULDER CROSS SLOPES

TYPE OF SURFACE	SHOULDER CROSS SLOPES Inch Per Foot	Foot Per Foot
No Pavement Edge Curbs		
Bituminous	3/8 - 5/8	.03 - .05
Gravel or Crushed Stone	½ - ¾	.04 - .06
Turf	1	.08
With Curbs at Pavement Edge		
Bituminous	¼	.02
Gravel or Crushed Stone	¼ - ½	.02 - .04
Turf	3/8 – ½	.03 - .04

5.13.52 The selection of surface treatment for shoulders should be guided not only by traffic volume and climatic conditions, but also by the desired contrast between shoulder and pavement. The contrast should be sufficient so that during involvement weather the shoulder is easily distinguished from the pavement. The contrast should be in both color and texture. Pavement edge lines are effective means for shoulder delineation where there is lack of shoulder contrast.

5.13.53 Side Slopes – The maximum rate of side slope will depend on the stability of local soils as determined by local experience. Slopes should be as flat as feasible and other factors should be considered to determine the design slope. Flat side slopes increase safety by providing maneuver area in emergencies, are more stable than steep slopes, aid in the establishment of plant growth, and simplify maintenance work. The intersection of slope planes should be well rounded.

5.13.54 Table 9 illustrates side slopes for fill sections.

TABLE 9
SUGGESTED EARTH SLOPES FOR DESIGN

Height of Cut or Fill. FeeT	Earth Slope Horizontal to Vertical for Type of Terrain: Flat or Rolling	Moderately Steep	Steep
0-4	6:1	4:1	4:1
4-10	4:1	3:1	2:1
10-15	3:1	2-1/2:1	1-3/4:1
15-20	2:1	2:1	1-1/2:1*
over 20	2:1	1-1/2:1*	1-1/2:1

* In clay or silty soils subject to erosion, slopes steeper than 2:1 should be avoided.

5.13.55 Appurtenances – This covers such diversity as separate lane storage for left turns, additional lane feet to accommodate public transportation, erosion control, retaining walls, fencing, noise control, ramps, etc. which are of importance in roadway design work, but are presently not standardized. These standards intend for their consideration and treatment by the designer as merited by traffic, zoning and the actual conditions as they exist, or are anticipated to exist, in the field.

5.13.56 Street Lighting

5.13.56.1 The City of Columbia provides standard, overhead-feed wood-pole lighting, leased from SCE&G, for publicly-owned streets within City limits at no additional charge to residents.

5.13.56.2 In the event the developer wishes to provide decorative (underground-feed) lighting, the developer shall sign the standard acknowledgement document waiving the City-provided lighting, and submit plans to the Public Works Department detailing the proposed lighting layout, wiring, and meter points, and a corresponding photometric diagram. General illumination standards are shown in the following table:

Recommended Illumination Levels

Road Classification	Area Classification	Average Light Level (Footcandles) *	Uniformity Ratio (Average to Minimum)
Collector	Commercial Intermediate Residential	1.2 0.9 0.6	4 to 1
Local	Commercial Intermediate Residential	0.9 0.7 0.4	6 to 1
Sidewalks	Intermediate Residential	0.6 0.2	6 to 1
Intersections		0.8	

* - Based upon asphalt road surface with diffuse or slightly specular reflectance.

Decorative lighting poles and fixtures shall be selected from City-approved vendors, and shall conform to City standard designs. A listing of approved vendors may be obtained from the Public Works Department.

5.13.57 Roadway Signing and Pavement Markings

5.13.57.1 Signing on public streets shall be provided by the developer, and shall include, but not be limited to, the following: Street Markers, Stop Signs, Yield Signs, and Warning Signs. The signing shall conform to the current Manual on Uniform Traffic Control Devices (MUTCD) published by the Federal Highway Administration.

5.13.57.2 Pavement markings shall be provided by the developer, and shall include, but not be limited to, the following: Stop Bars, Centerlines, Lane Lines, and Parking Spaces. The signing shall conform to the current MUTCD.

5.13.57.3 The developer shall submit a roadway signing and marking plan to the Public Works Department for review and approval.

5.13.57.4 All traffic control devices shall be approved by the Traffic Engineer in advance of installation.

5.14 COMPLETE STREETS

City of Columbia (DRAFTED FROM SCDOT EDM-22 – Feb. 23, 2003) May 2009

Subject: Policy for Complete Streets Considerations for Bicycle Facilities

Primary Departments: Preconstruction, Traffic Engineering, Engineering, Construction Management, Maintenance

Upon adoption of Resolution R2008-053, by Columbia City Council, where it is affirmed that bicycling accommodations should be a routine part of the City's planning, design, construction, and operating activities, and will be included in the everyday operations of our transportation system, and

In order to provide guidance to City of Columbia Department personnel, the attached typical sections have been developed to supplement the following guidelines for the selection and design of bicycle facilities on all new projects. In addition, typical sections have been included to give guidance on how to restripe existing five-lane sections to accommodate bicycle facilities.

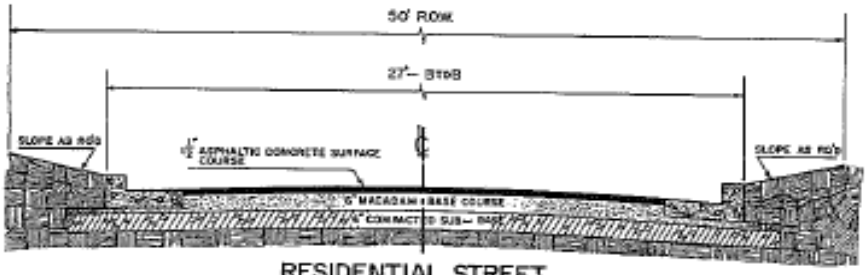

RESIDENTIAL STREET

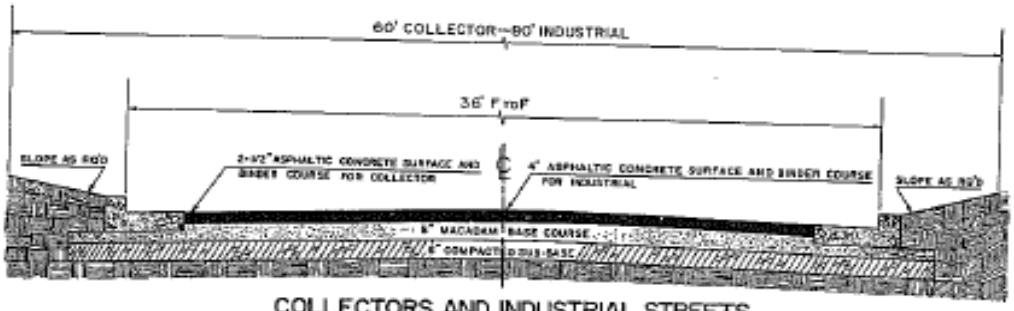

COLLECTORS AND INDUSTRIAL STREETS

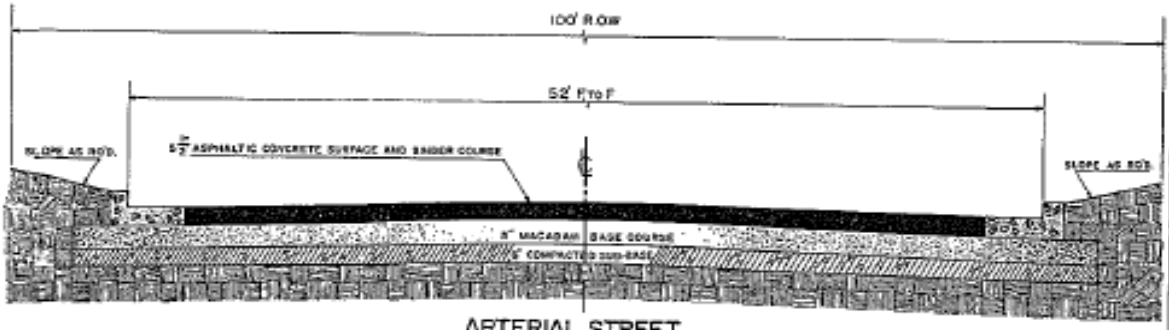

ARTERIAL STREET

EQUIVALENT THICKNESS REQUIRED TO MAKE ONE INCH OF HOT LAID ASPHALTIC CONCRETE(2)

HOT LAID ASPHALTIC CONCRETE SURFACE	1.00		OLD SURFACING	
HOT LAID ASPHALTIC CONCRETE BINDER	1.00		OLD ASPHALTIC CONCRETE SURFACE	2.82
BITUMINOUS SURFACING	1.25		OLD ASPHALTIC CONCRETE BINDER	2.82
			OLD SAND ASPHALT	3.50
EARTH TYPE BASE (ORD SURF MTL.)	4.0		BITUMINOUS SURFACING	3.33
EARTH TYPE BASE (PIT MTL.)	2.75		OTHER, 80% OF THE ORIGINAL VALUE	
MACADAM BASE	2.75			
CEMENT STABILIZED EARTH BASE	2.50		OLD BASES	
HOT LAID SAND ASPHALT BASE	1.50		70% OF THE ORIGINAL VALUE	
STABILIZED AGGREGATE BASE	2.75			
HOT LAID ASPHALT AGGREGATE BASE	1.25		OLD SUB-BASES	
CEMENT STABILIZED AGGREGATE BASE	1.50		80% OF THE ORIGINAL VALUE	
OLD PCC PAVEMENT	1.10			
EARTH TYPE SUB-BASE (ORD. SURF. MTL.)	5.67			
EARTH TYPE SUB-BASE (PIT MTL.)	4.40			
SOIL AGGREGATE SUB-BASE	4.40			
CEMENT STABILIZED EARTH SUB-BASE	3.85			

General Notes

1. THE ABOVE SECTIONS INDICATE MINIMUM REQUIREMENTS.
2. MATERIALS OF EQUAL STRENGTH, IN THEIR RESPECTIVE THICKNESSES REQUIRED MAY BE SUBSTITUTED IN LIEU OF THE MINIMAL. SEE THE ROAD DESIGN STANDARDS, CITY OF COLUMBIA, FOR THE PROCEDURE.
3. CONSTRUCTION OF ROAD SECTIONS TO BE IN ACCORDANCE WITH THE ROAD CONSTRUCTION SPECIFICATIONS.
4. THESE SECTIONS APPLY TO FLEXIBLE PAVEMENT.
5. BARRIER OR ROLL TYPE CURBING IS ACCEPTABLE.

CITY OF COLUMBIA
DEPARTMENT OF ENGINEERING
COLUMBIA, SOUTH CAROLINA

SCALE: NONE
DATE: OCT. 15, 1977
APPROVED BY:
DESIGN ENGINEER
DRAWN BY: J.E. HIRON
REVISED

STANDARD ROAD SECTIONS

DRAWING NUMBER

RD-1

The following describes shared roadways and bike lanes/paved shoulders and gives guidance on their design requirements for new projects. Other design considerations for bicycle accommodations are also addressed.

For guidance of any bicycle facility not specifically addressed below, the City of Columbia Departments will refer to AASHTO, Guide for the Development of Bicycle Facilities, Manual of Uniform Traffic Control Devices and/or South Carolina Department of Transportation's Standard Specifications for Highway Construction.

A. Shared Roadways

Description

Shared roadways are the way most bicycle travel in the United States occurs. This type of facility can be used to accommodate bicyclists without signing and striping the roadway for bicycle travel. This type of facility works well to accommodate bicycles through urban areas that are not considered high bicycle-demand corridors or where other constraints do not allow the development of a bike lane/paved shoulder.

Design Considerations

On urban sections (curb and gutter), an outside travel lane width of fourteen (14) feet is the minimum recommended width for a shared-use lane. The gutter pan is not to be included in the width of the shared roadway. On stretches of roadways with grades greater than five percent, consideration should be given to providing a 15-foot travel lane width. Shared roadway widths greater than fourteen (14) feet that extend continuously along a stretch of roadway may encourage the undesirable operation of two motor vehicles, especially in urban areas, and are therefore not recommended as shared use roadways and consideration should be given to striping the additional width. The Department's Pedestrian and Bicycle Coordinator and Traffic

Engineering can provide assistance in determining the need for a shared roadway as opposed to bike lanes/paved shoulders. On rural sections (shoulder), criteria should be used as described in the bike lanes/paved shoulders section of this document.

B. Bike Lanes/Paved Shoulders

Description

This type of facility incorporates bicyclists into a roadway by utilizing a bike lane/paved shoulder adjacent to the motor vehicle traffic. A bike lane should be a lane specifically signed and marked as indicated in the Manual on Uniform Traffic Control Devices (Part 9). A paved shoulder may be used to accommodate bicycle travel without specific markings and signs present. A bike lane provides for more predictable movements by the motorist and bicyclist. Bike lanes should be one-way facilities and carry bike traffic in the same direction as adjacent motor vehicle traffic. This type of facility should be used where the Department desires to provide continuity to other bicycle facilities or designate preferred routes through high demand corridors, such as any of our designated South Carolina bicycle touring routes or a municipality's bikeway. The Department's Pedestrian and Bicycle Coordinator and Traffic Engineering can provide assistance in determining the need for bike lanes as opposed to a shared roadway.

Design Considerations

On rural sections (shoulder) with ADT greater than 500, bike lanes/paved shoulders should be a minimum of four (4) feet wide in each direction to accommodate bicycle travel. The bike lanes/paved shoulders will have a cross slope of 24H:1V (4.17%). Where motor vehicle speeds exceed 50 mph or the percentage of trucks, buses, and recreational vehicles are greater than five percent of the ADT, consideration should be given to providing a minimum six (6) feet of width to accommodate bicycle travel adjacent to the higher speeds (50 mph or greater) and to lessen the effect of windblast from the larger vehicles. On rural sections (shoulder) with ADT less than 500, paving two (2) feet of the earthen shoulder will be adequate to better accommodate bicyclists.

On urban sections (curb and gutter), bike lanes/paved shoulders should be a minimum of four (4) feet wide to accommodate bicycle travel. The bike lanes/paved shoulders will have a cross slope of 24H:1V (4.17%). The gutter pan is not to be included in the width of the bike lane/paved shoulder. Where the percentage of trucks, buses, and recreational vehicles are greater than five percent of the ADT, consideration should be given to providing a minimum six (6) feet of width. Where motor vehicle speeds are 50 mph or greater, Department guidelines for shoulder widths should be utilized as defined in the SCDOT Highway Design Manual, thus giving the bicyclist either eight (8) or ten (10) feet of paved shoulder width to utilize.

C. Other Design Considerations for Bicycle Facilities

Paving Existing Shoulders

In order for a shoulder to be usable to a bicyclist, it must be paved. Adding or improving paved shoulders often can be the best way to accommodate bicyclists in rural areas and benefit motor vehicle traffic. Paved shoulders have the added benefits of not only accommodating bicyclists, but also they can extend the service life of the road surface since edge deterioration will be significantly reduced. It is currently Department policy to provide two (2) feet of paved shoulder width on all new projects utilizing earthen shoulders. Where practical and attainable, a minimum width of four (4) feet should be paved on the shoulder to provide for bicycle facilities where the ADT of the road is greater than 500.

Where constraints do not allow obtaining the indicated widths, any additional width can be beneficial to a bicyclist.

Resurfacing/Restriping Existing Roadways

When the Department desires to accommodate bicycle facilities by resurfacing/restriping existing roadways, lane or median widths may be narrowed to obtain the desired bicycle facility. Roadways designated as being on the National or South Carolina Truck Network or roadways where the percentage of trucks, buses, and recreational vehicles are greater than five percent of the ADT should have lane widths of twelve (12) feet. Where conditions allow utilizing lane widths narrower than twelve (12) feet to accommodate bicycle facilities, the impacts of the narrower lane widths to motor vehicle traffic should be determined. Guidance on selecting the proper lane width for a roadway can be found in Chapters 19 through 22 of the SCDOT Highway Design Manual.

A flush /painted median width of fifteen (15) feet is indicated by the South Carolina Highway Design Manual, but the width can be reduced to twelve (12) feet to accommodate bicycle

facilities on an existing roadway or existing project. Median widths less than twelve (12) feet are not recommended where posted speeds are greater than 35 mph and the percentage of trucks, buses, and recreational vehicles is greater than five percent of the ADT.

Drainage Inlet Grates

Where practical, drainage inlets should be placed outside of the bicycle facility. Where this is not practical, hydraulically efficient, bicycle-safe grates should be utilized and should be placed or adjusted to be flush with the adjacent pavement surface. On bridges, a minimum of four (4) feet from the edge of the travel lane should be clear of drainage inlets.

Longitudinal Rumble Strips

Longitudinal rumble strips shall not be used where bicycle traffic is expected to occur.

Bridges

In general, bridge widths should match the approach roadway widths (travelway plus bike lanes/paved shoulders). However, in determining the width for major water crossings, consider the cost of the structure, traffic volume, and potential for future width requirements.

Valley Gutter Sections

The guidelines for shared roadways and bike lanes/paved shoulders will be utilized to accommodate bicycle facilities on roadways with valley gutter. Due to the fact that valley gutter sections are typically used on low volume, two-lane secondary roadways, the cross slope of the paved shoulder/bike lane should be 48H:1V (2.08%).

STATE OF SOUTH CAROLINA)
) ACKNOWLEDGEMENT
COUNTY OF RICHLAND)

Whereas, _____ is in the process of developing a subdivision to be known as XXXXX;

Whereas, _____ desires to provide streetlights within XXXXX with such streetlights to be located in the public right-of-way;

Whereas, the City of Columbia is willing to provide standard streetlights within XXXXX with such standard streetlights to be located in the public right-of-way;

Whereas, instead of the standard streetlights offered to be provided by the City of Columbia, _____ desires and has requested decorative streetlighting within XXXXX with such decorative streetlighting to be located in the public right-of-way;

NOW THEREFORE, _____ acknowledges the City of Columbia's ability and willingness to provide standard streetlighting within XXXXX with such standard streetlighting to be located in the public right-of-way;

_____ further acknowledges and agrees that it waives and/or refuses the offer by the City of Columbia to provide standard streetlighting;

_____ further acknowledges that _____ will contract directly with SCE&G to provide the desired decorative streetlighting and that the City of Columbia shall have no obligation to provide streetlighting in XXXXX in the public right-of-way.

WITNESS:

_____ By:_____

(Print Name):_____

Title:_____

Date:_____

PART 6: PROCEDURES FOR THE SUBDIVISION OF LAND
TABLE OF CONTENTS

Paragraph	Description	Page No.
6.1	General	6-1
6.2	Sketch Plan Review	6-1
6.3	Preliminary Plat (Construction Drawings)	6-1
6.4	Final Plat Approval	6-3
6.5	Form No. 2	6-10
6.6	Form No. 3	6-11
6.7	Sample Procedures for Sanitary Sewer Construction Permitting Under Delegated Review Program Letter	6-12
6.8	Sample Request for 208/201 Plan Conformance Certification	6-15
6.9	Delegated Review Program Checklist	6-16

CITY OF COLUMBIA REGULATIONS
PART 6
PROCEDURES FOR THE SUBDIVISION OF LAND

6.1 GENERAL – The procedure for review and approval of a subdivision plat consists of three separate steps. These are:

6.1.1 Sketch plan review by Planning Commission or its staff.

6.1.2 Review and approval of Preliminary Plat, and

6.1.3 Review and approval of final Plat.

6.2 SKETCH PLAN REVIEW - The subdivider or his representative shall present seven (7) copies of a sketch plan to the staff of the Planning Commission Plans should be delivered to the zoning Administrator, 1136 Washington Street, Columbia, SC 29201. Telephone number (803) 545-3333. The sketch plan shall be prepared in accordance with procedures set forth in City of Columbia Subdivision Regulations.

6.3 PRELIMINARY PLAT (CONSTRUCTION DRAWINGS) - The subdivider or his representative shall submit seven (7) copies of a Preliminary Plat (Construction drawings) to the staff of the Planning Commission at the address shown in section 6.1 above. The construction drawings shall be prepared in accordance with procedures set forth in Part 1, City of Columbia Regulations and City of Columbia Subdivision Regulations.

6.3.1 Preliminary Engineering Report – If a water system is proposed for the development, a preliminary engineering report should be submitted to the South Carolina Department of Health and Environmental Control, 2600 Bull Street, Columbia, S.C. 29201. The report should be submitted at least four (4) weeks prior to submission of construction drawings. When the preliminary engineering report is approved, submit three (3) copies of the permit to construct directly to the South Carolina Department of Health and Environmental Control. It should be noted that construction plans for sanitary sewers meeting the criteria for processing under SCDHEC's Delegated Review Program will not be submitted directly to SCDHEC. The procedures described in the letter attached hereto as Section 6.6 will be followed instead.

6.3.2 A copy of the preliminary engineering report (s) shall be submitted to the City Engineer, 1136 Washington Street, P.O. Box 147, Columbia, SC 29201. Telephone number (803) 545-3400. The report (s) shall be prepared in accordance with procedures set forth in Part 1, City of Columbia Regulations.

6.3.3 Annexation – If the property being subdivided is contiguous to the City limits, see Part 8, Section 8.0.2 for procedures.

6.3.4 Easements – Attention is directed to the requirement for granting easements to the City of Columbia to provide for the operation, maintenance, and future extension of water, sanitary sewer, and storm drainage systems within the subdivision, as applicable. It is important to note that two copies of all off-site easements

necessary for construction of the facilities to be deeded to the City must be submitted with the preliminary plat (construction drawings).

6.3.5 Water Main Extension – The City of Columbia will extend water service into those areas inside City limits not presently served by its water system in accordance with procedures set forth in Part 7, City of Columbia Regulations.

6.3.6 Sanitary Sewer Extension – The City of Columbia will extend sanitary sewer service into those areas inside City limits not presently served by its sewer system in accordance with procedures set forth in Part 8, City of Columbia Regulations.

6.3.7 Use of Septic Tanks – If the use of septic tanks is anticipated, the subdivider must:

6.3.7.1 Make application to the appropriate County Health Department.

6.3.7.1.1 Richland County Health Department
1221 Gregg Street
Columbia, SC 29201
Telephone (803) 254-4186

6.3.7.1.2 Lexington County Environmental Health Department
212 South Lake Drive
Lexington, SC 29072
Telephone (803) 356-8113

6.3.7.2 Request an I&E report from the appropriate County Soil and Water Conservation District.

6.3.7.2.1 Richland County Soil and Water Conservation District
2020 Hampton Street
Columbia, SC 29201
Telephone (803) 765-5806

6.3.7.2.2 Lexington County Soil and Water Conservation District
Lexington County Memorial Building
Lexington, SC 29072
Telephone (803) 359-3165

6.3.7.3 Submit a copy of the I&E report obtained in subparagraph 6.2.6.2 above along with the Preliminary Plat (construction drawings) to the South Carolina Department of Health & Environmental Control, 2600 Bull Street, Columbia, SC 29201.

6.3.8 Construction – Following approval of the Preliminary Plat (construction drawings) the subdivider may begin construction provided:

6.3.8.1 All necessary permits to construct have been received from the South Carolina Department of Health and Environmental Control. Refer to section 6.2.1 above.

6.3.8.2 All necessary highway encroachment permits have been received from the South Carolina Department of Transportation, City or County. To make application for an encroachment permit, contact the City Engineer, 1136 Washington Street, P.O. Box 147, Columbia, SC 29217. Telephone number: (803) 545-3400.

6.3.8.3 The Contractor must provide the City Engineer twenty-four (24) hours prior notice in order that a City Inspector can be scheduled to inspect the construction. Notice may be given by contacting the Engineering Plans Review Section in the City Engineer's office. Telephone number (803) 545-3400.

6.4 FINAL PLAT APPROVAL – Following completion of the physical development of all or an approved phase or part of the areas shown on the approved Preliminary Plat (construction drawings), the subdivider or his representative shall provide an electronic copy of plans meeting Part 28 of this manual along with a .pdf copy, and five (5) prints of the Final Plat to the Planning Commission at the address shown in Section 6.1 above. The Final Plat shall be prepared in accordance with Procedures set forth in Record Drawing Checklist, City of Columbia Regulations and City of Columbia Subdivision Regulations.

6.4.1 RECORD DRAWING CHECKLIST

Project Name & Location_____Date_____

Engineer Name & E-Mail Address_____ City File #_____

- Name of Subdivision or Project and City File Number **[Refer to page 3 of this document regarding submittal format]**
- "Record Drawing" marked in title block (Please do not use the older label of “As-Built).
- Show distinct phase lines and identify the phase in the as-built title block.
- Identify TMS number and property owners for all adjacent properties.
- Graphic scale should not be smaller than 1" = 100'.
- Date (Revision Dates when changes are made after original Submittal).
- North point identified as magnetic, true or grid.
- Vicinity map @ scale of 1" = 1,000'
- Remove easements over water or sewer lines in public roads
- Off-Site Easements Obtained (where applicable).
- City File Number(s) referenced for existing lines
- County where project located properly identified
- Mean sea level datum and so stated [in statement form].
- Insure record drawing date and City’s approval date is correct in certification statement. Final submittals must be certified by a Professional Engineer.
- Print Engineer’s Name and Provide PE License #, including State where licensed
- Provide blow-ups of hydrants and hydrant valves
- Use standard symbols for all fittings, such as meter boxes, sanitary sewer taps, fire hydrants, reducers and valves
- Meter box/Sanitary Sewer tap identified for each lot with 2 references to each
- Bearings and distances provided on all sanitary sewer mains
- Conforms to approved construction drawings and approval letter [The City of Columbia does not determine meter sizes].
- Name and address of Sewer provider if other than the City (note if sewer provided through septic tank).

- Must Submit Sewer Acceptance letter upon receipt (if sewer to be treated by non-City entity).

- Name and address of fee simple title holder(s). **Verify ownership through County on-line records.**

- **Submit Copy of Recorded Mortgage on all parcels being developed as part of this project**

- Must submit deed to property or Title to Real Estate.

- Specify in statement form to whom roadways will be conveyed. (SCDOT, City, County). Verify Road names (i.e. Court, Circle, etc.) using www.Richlandonline.com

- Label lot numbers, block numbers, phase identifications and buildings.

- Remove copyright statement or add "Does Not Apply to the City of Columbia."

- Distances on sanitary sewer mains must match the coordinating stations numbers on the profile sheet.

- Utility lines cannot arbitrarily end at phase lines; there must be proper termination of the line (plug, manhole, etc.) A utility line cannot end at a tee.

- All bends must be identified, sizes shown and located from (2) location points.

- Identify blow-off sizes

- Topography by contours at vertical intervals of not more than five (5) feet depicting final or finished conditions

  Contours must be labeled and show multiple locations for ease of following. Top nut of hydrant may be substituted

  For elevation purposes.

- Provide dimensions to nearest one-tenth of the foot and Angles shown to nearest second.

- Provide location and description of monuments (benchmarks).

- All rights-of-way, easements and areas to be dedicated to public use shown along with the purpose of each stated, including but not limited to power line rights of way, gas line rights of way, water, sanitary sewer, and storm drainage easements, private roadways.

- Location data: (2) locations are required for the point of beginning and the end of all new lines, on valves, bends, reducers, meter boxes, blow offs, cleanouts, manholes and catch basins; referenced to stable physical feature such as curb corners, building corners, property corners, etc. where available. Station numbers will not be accepted.

- Show location of utility lines running through easements of right-of-ways shown in relation to easement lines.

- All easements must be shown, labeled and dimensioned as "Exclusive City of Columbia easements. Gaps must be closed on easements if there is private property between the easement and the road right-of-way or property line.

- Material, size and lengths of all water lines must be shown from bend to bend.

- Size, material and slope between manholes, and lengths of all sanitary sewer lines on plan view and profiles.

- Sewer profiles including separations for all other utilities meeting Ten State Standards.

- Infiltration certification on all sewer drawings.

6.4.2 INFILTRATION CERTIFICATION

"I hereby certify that the infiltration/exfiltration does not exceed 200 gallons per day per inch of pipe diameter per mile of sewer pipe including manholes for any section of the system."

_____

Registered Engineer, State of South Carolina, P.E. Number _____

6.4.3 ENGINEER'S CERTIFICATION

"I hereby certify that the streets, storm drainage system, sanitary sewer system and water system for _____ as shown on the Record Drawings dated , prepared by _____, has been installed in accordance with the Construction Drawings approved _____."

_____

Registered Engineer, State of South Carolina, P.E.#_____

6.4.4 REQUIRED EASEMENT LANGUAGE

Main lines and future extensions - "Exclusive 15' City of Columbia Water Easement Service Lines can be covered in a note: "There is a 10' Exclusive City of Columbia water/sewer easements on all service lines from the main line to the meter/cleanout" (Only in subdivisions)

6.4.5 STORM DRAIN CERTIFICATION LANGUAGE

I hereby certify that the storm drainage system for _____ was installed in accordance with the City of Columbia approval letter dated _____, and meets storm drainage requirements and contained silt on the property concerned to the maximum extent feasible. Provisions for erosion and sediment control and storm drainage were met in accordance with the Columbia Sediment and Erosion Control and Storm Drainage Ordinance.

6.4.6 FINAL RECORD DRAWING REVIEW PACKAGE TO THE CITY OF COLUMBIA MUST INCLUDE:

6.4.6.1 Five (5) Sets of 24x36 Record Drawings**, including two digital submittals (one in Adobe Acrobat PDF format and one in AutoCAD DWG format as described in Part 28 of this document)**. Digital submission will replace Mylar submittals at the completion and approval of the project.

6.4.6.2 Originally signed Form 2, signed by the developer, identifying the project name, location, phase and City File Number on Form

6.4.6.3 Originally signed Form 3 (a/k/a Lien Waiver), signed by the utility contractor, identifying the project name, location, phase and City File Number. Form 3 must be signed and certified by authorized representative of the utility company

6.4.6.4 Itemized Materials List on Utility Contractor's Company letterhead, identifying project name, location, phase and City File Number

6.4.6.5 Sewer Approval Letter (if Sewer is Provided by entity other than City of Columbia), identifying the project name, location, and City File Number

6.4.6.6 Deed to the property (a/k/a Title to Real Estate), identifying the project name, location, phase and City File Number

6.4.6.7 Completed Record Drawing Checklist Identifying project name, location, phase and City File Number

6.4.6.8 NOTE: Record drawings must be submitted along with executed utility deeds, declaration of covenant (where applicable), and Partial Mortgage Release (In instances where there is no mortgage on the property, the Owner must return form to the City identifying the project name and address with the notation, "There is no mortgage on this property.") Declaration of Covenant, Partial Mortgage Release and utility deeds must be submitted as legal (8 ½" 14") documents.

6.4.7 FINAL PACKAGE TO DHEC MUST INCLUDE:

6.4.7.1 Engineer's Certification Letter. The Engineer must certify that the project has been built in accordance with the permitted plans and with good engineering practices. The certification is based upon periodic observation of the construction by the project engineer or a representative of his/her office. Infiltration Certification must also be included for all sewer projects.

6.4.7.2 The City's Ownership, Operation & Maintenance Letter (O&M Letter). This letter will be provided by the City of Columbia upon receipt of all required documents (deeds, covenants, etc.) approved pressure tests, bacteriological test and final inspection by the City's Utility Inspector

6.4.7.3 Pressure, Bacteriological and Fire Hydrant Flow Test Results (Test results will be issued with the City's O&M Letter)

6.4.7.4 Two (2) Sets of Record Drawings

6.4.8 THE COMPLETE PACKAGE MUST BE SUBMITTED BY THE ENGINEER TO:
Central Midlands District
Environmental Quality Control
P.O. Box 156
State Park, South Carolina 29147

6.4.9 Form No. 2 – The subdivider or his designated representative shall submit Form No. 2, "Request for Approval & Acceptance of Installation". See sample Form No.2. Form No. 2 may be obtained by contacting the City Engineer at the address or telephone number shown in Section 6.2.7.2 above.

6.4.10 Form No. 3 – The subdivider or his designated representative shall submit Form No. 3, "Lien Waiver Form" signed by the Utility Contractor who installed the improvements, to the City Engineer before said improvements will be accepted by the City. See Form No. 3. Form No. 3 may be obtained by contacting the City Engineer at the address or telephone number shown in Section 6.2.72 above.

6.4.11 Material List – The subdivider or his designated representative shall furnish to the City Engineer a detailed quantity list of all materials used on the project. This

materials list must be signed by the Utility Contractor who installed the improvements.

6.4.12 Following receipt of acceptable record drawings and the laboratory report certifying the water system is free from harmful bacteria, the City Engineer, or his representative, will conduct a final inspection of the water and sanitary sewer systems.

6.4.13 Following successful completion of the final inspection, the City Engineer will prepare deeds and easements for those utilities to be accepted by the City for operation and maintenance. When these deeds and easements have been properly executed and accepted by the City Engineer, the letter of acceptance by the City for operation and maintenance will be issued.

6.4.14 Permit to Operate – Before the City can place the subdivision water and/or sanitary sewer system(s) in operation, a permit to operate must be granted by the South Carolina Department of Health and Environmental Control. Since SCDHEC no longer performs final inspections on a routine basis, the project developer through his engineer must assume this responsibility. The engineer's inspection must be coordinated with the City Engineer's final inspection.

6.4.14.1 Submittals Required – In order to obtain the permit to operate the developer's engineer must submit to SCDHEC properly certified as built plans, laboratory test results for water mains, infiltration certification for sanitary sewers, and a letter from the City accepting the utilities for operation and maintenance.

6.5 Form No. 2

_____, 20___

Division of Engineering
City of Columbia
Columbia, South Carolina

Gentlemen:

I certify that the described streets, sidewalks, storm drainage facilities, sanitary sewer mains, pump stations, manholes, sewer pump stations and appurtenances, water mains, valves, and appurtenances (strike items not applicable) have been installed in accordance with approved plans and specifications and request that the Utilities and Engineering Department approve and accept this installation.

The work to be accepted under this request is for _____ and is more particularly described by being located _____, in _____ County,

I further certify that all outstanding encumbrances associated with these installations have been satisfied and that the above described work is free of all liens.

This request includes permission for City employees and equipment to enter upon the property described hereon for the purpose of doing any maintenance and repairs deemed necessary to protect the operational integrity of the systems. It is understood and agreed that I will be billed, and pay for any maintenance/repairs required prior to final acceptance of the deeds for these systems by the City.

_____ _____
Date

_____
Developer

APPROVED ENGINEERING DIVISION:

_____ _____
Inspector Date

_____ _____
City Engineer Date

6.6 Form No. 3

_____, 20____

LIEN WAIVER FORM

TO WHOM IT MAY CONCERN:

The undersigned in consideration of _____ and other valuable consideration, the receipt whereof is hereby acknowledged, and in order to induce The City of Columbia to accept a deed to the property herein described do hereby waive and release to the owners of said property and the said The City of Columbia of any and all liens or right to liens upon said property or upon the improvements, now or hereafter thereon, or upon the monies or right to liens being on account of labor or services, material, fixtures or apparatus heretofore furnished or to be furnished at any time hereafter by the undersigned.

The property subject to said liens or right to liens is hereby released and is described as follows: (Enter name of project, including phase designation if appropriate.)

Signed and sealed this _____ day of _____, 20____.

_____

By: _____
Title

6.7 Sample Procedures for Sanitary Sewer Construction Permitting Under Delegated Review Program Letter

October 24, 1991

Re: Procedures for Sanitary Sewer Construction Permitting Under Delegated Review Program

The City of Columbia has been delegated authority to perform construction plan review for The South Carolina Department of Health and Environmental Control related to the permitting of sanitary sewer construction. In an effort to minimize delays in permitting sanitary sewer construction, DHEC established a Delegated Review Program (DRP) which is available to Publicly Owned Treatment Works (POTW's) that have an internal review program. Review is limited to all gravity line extensions 16" diameter or smaller; lift stations with a design size of 2,000 gallons per minute or smaller; and force mains 16" diameter or smaller from lift stations tying to a gravity sewer. The program does not include pressure sewers, STEP systems, small diameter sewer service systems, wastewater treatment facilities (new, modifications or expansions), or effluent outfall construction (gravity force mains or pump stations) from wastewater treatment facilities.

The program has been designed so that once the delegated entity has completed its review and obtained all appropriate approvals, a packet will be forwarded to DHEC for construction permitting. If the approval packet is complete, the construction permit should be granted within three working days.

Systems that are to be operated and maintained by the City of Columbia with treatment provided at the Metro Wastewater Treatment Plant (NPDES Permit No. SC0020940) will be reviewed by the Department of Utilities and Engineering. Following approval by the City, plans and associated documents will be forwarded to DHEC's Bureau of Water Pollution Control for permitting. No direct submittals will be accepted by DHEC if they meet the criteria for processing under the DRP.

In addition to the two sets of construction plans normally sent to the City for review, the following is required:

1. Three additional sets of proposed construction plans (sanitary sewer plan and profile). Specifications will not be required since the City's specifications have been pre-approved and are on file with the Domestic Wastewater Division.

2. Two copies of the appropriate design calculations including flow and pump stations calculations with a copy of the pump curve. The flow calculations should be based on the DHEC publication entitled "Guidelines for Unit Contributory Loadings of Wastewater Treatment Facilities". These documents must be signed and sealed by the developer's engineer.

3. Two copies of an 8 ½" x 11" location map. This should be separate from the plans. Even if there is a location map on the plans, DHEC still requires separate maps on an 8 ½" x 11" sheet of paper.

4. A $75.00 check made payable to South Carolina Department of Health and Environmental Control (S.C.D.H.E.C.).

5. One copy of an overall layout sheet of the wastewater system separate from the plans. This layout must show the proposed sewer lines and their sizes and include existing streets and sewer lines. The proposed sewer lines must be highlighted to be easily identified. This sheet must be sent by DHEC to the Development Board when the project is permitted. There is no scale requirement for this sheet.

6. Two copies of any required off-site easements necessary to build the project. Technical review will be undertaken upon receipt of plans by the City; however, the packet will not be forwarded to DHEC until required easements have been obtained. The City is available to assist in preparing necessary documents. Contact U&E office at (803) 545-3400 and ask for the right of way representative.

7. The original South Carolina Department of Health and Environmental Control application for permit to construct properly completed with the appropriate signatures and one copy.

8. The approved 208 Plan certification from the designated council of governments must be provided. The designated council of governments for this area is Central Midlands Regional Planning Council.

9. A South Carolina Water Resources Certification for crossings of navigable water bodies and/or any other related agency approval letters if required. The mailing address and telephone number for the South Carolina Water Resources Commission is 1201 Main Street, Suite 1100, Columbia, SC 29201, telephone 737-0800.

Where the City review requires revisions of drawings, the project engineer will be notified so that plans may be revised and resubmitted. The City can no longer issue letters with technical conditions.

When plans are approved and required related documents received, the project will be submitted to DHEC. At this time, a letter will be sent to the appropriate local government planning office informing them that plans were approved and submitted for permitting. This letter will set forth non technical requirements by the City. Copies will be disseminated to all interested parties. It is important to note that work and materials must conform to City Specifications. This is to include infiltration certification, and preparation of record drawings.

Since DHEC no longer performs final inspections on a routine basis, the project developer through his engineer must assume this responsibility. Inspections must be coordinated with the Department of Utilities and Engineering Inspector.

Sample copies of the 208 Plan certification and a DHEC DRP checklist are furnished to assist in assembling required data.

6/23/92

6.8 Sample Request for 208/201 Plan Conformance Certification

DATED:
TO: Central Midlands Regional Planning Council
236 Stoneridge Drive
Columbia, SC 29210

SUBJECT: Request for 208/201 plan conformance certification.

Please review the following project and complete Sections 10 and 11.

1. Project Name:

2. County:

3. General Location: See attached map. (8 ½" X 11" sheet)

4. Type of Action for Review: Construction Permit Request

5. Type Project:

6. Type Waste: Volume (GPD):

7. Disposal Method:

8. Consulting Engineer:
Phone:

9. POTW Contact: Scott Rogers
Phone: (803) 545-3400

10. This project (is) (is not) in conformance with the 208/201 Plan.

11. Comments:

_____ _____
Signature of Certifying Officer and Title Date

Return with any attached comments to the following address of the POTW participating in the Delegated Review Program:

Name: Department of Engineering
Address: P.O. Box 147
City: Columbia, SC 29217

10/07/02

DELEGATED REVIEW PROGRAM
CHECKLIST FOR CONSTRUCTION SUBMITTAL

	Yes	No	N/A
1. Transmittal letter noting DRP submittal.	By City		____
2. Three (3) copies of plans and specifications (omit spec., City has approved standard specs on file with DHEC)	___	___	____
3. Two (2) copies of appropriate design calculations including flow and pump station calculations with a copy of pump curve(s). The documents must be signed and sealed by the project engineer.	___	___	____
4. Two (2) copies of a 8 ½" x 11" detailed location map (must be separate from plans)	___	___	____
5. A $75.00 check made payable to South Carolina Department of Health and Environmental Control (S.C.D.H.E.C.)	___	___	____
6. One (1) copy of overall layout sheet of the wastewater system separate from the plans. * This layout must show the proposed sewer lines and their sizes and include existing streets and sewer lines. The proposed sewer lines must be highlighted to be easily identified. * (Master plan of proposed development)	___	___	____
7. Two (2) copies of off-site easements.	___	___	____
8. The original application for permit to construct and one (1) copy.	___	___	____
9. A letter of acceptance from the entity providing the treatment of wastewater. If the owner of the WWTP will not own, operate and maintain the proposed sewer system, then a separate letter on the ownership and O&M from the responsible utility must be submitted.	By City		____
10. One (1) copy of the approved 208 Plan Certification (from designated COGs only).	___	___	____
11. One (1) copy of the Water Resources Certification (if applicable).	___	___	____

PART 7: SPECIFICATION FOR WATER MAIN EXTENSION
TABLE OF CONTENTS

Paragraph	Description	Page No.
7.1	General	7-1
7.2	Water Main Extension Agreement	7-1
7.3	Procedures	7-1
7.4	Applications for Individual Services	7-3
7.5	Sample Water Main Extension Agreement	7-4

CITY OF COLUMBIA REGULATIONS
PART 7
WATER MAIN EXTENSION

7.1 GENERAL – Water service will be extended into those areas not presently served by the City of Columbia water system in accordance with the following:

7.1.1 Inside City Limits – the City will install within a reasonable time after request an adequate water main to the property requiring service. The City is responsible for extensions to master parcels within the City limits and not to individual parcels that have been subdivided.

7.1.2 Outside City Limits – There are two alternatives for extending water mains to provide service. Under the first, and most common, the person requesting service may execute a water main extension agreement with the City, thereby obtaining City participation in the cost of the water main extension. Refer to Section 7.2 for procedures for executing a water main extension agreement. The second method is for the person requesting service to retain an engineer to design and prepare construction plans for the water main extension. Following approval of construction plans by the City Engineer, the person requiring service lets a contract for construction of water main extension. The design, plans and construction must comply with City design criteria and regulations. This method carries no city participation in the cost of engineering or construction, and the water main, along with necessary easements, must be deeded to the City at no cost to the City. Refer to Parts I and II of these regulations for procedures for Submission of Plans and Design Criteria.

7.1.3 Outside City Limits but Contiguous to City Limits – It is City practice to provide service only after the property is annexed into the City. Following annexation Section 7.0.1 above will apply. See Part 8, Section 8.0.2 for Procedures for Annexation.

7.2 WATER MAIN EXTENSION AGREEMENT- A water main extension agreement is a contract entered into between the city and the person or persons requesting water service wherein the City agrees to provide water service to property outside the City limits not presently served by the City's water system. See sample water main extension agreement, paragraph 7.5.

7.3 PROCEDURES – The procedures for water main extension agreements are as follows:

7.3.1 Execution of Water Main Extension Agreement. In those areas outside the City limits, but not contiguous to the City limits, the developer may obtain service by entering into a water main extension agreement with the City.

7.3.1.1 To initiate a water main extension agreement, contact the City of Columbia, Department of Utilities and Engineering, 1136 Washington Street, P.O. Box 147, Columbia, SC 29217. Telephone number: (803) 545-3400.

7.3.2 Water Main Size. The City Engineer shall establish and/or approve the size of the water main deemed adequate to serve the property requiring service.

7.3.3 Design of Water Main Extension. Construction plans for the proposed water main extension shall be prepared by a registered professional engineer, licensed to practice in South Carolina, and shall be submitted in accordance with procedures set forth in Part 1, City of Columbia Regulations

7.3.4 Cost of the Water Main Extension. The developer's total cost of construction shall be equal to the actual contract cost for installation of the water main, plus engineering fees not to exceed 10% of the actual contract cost, plus actual off-site easement acquisition costs not to exceed the cost per linear foot specified in the sanitary sewer main extension agreement. The engineer shall provide the City with an estimate of the total cost of construction prior to execution of a water main extension agreement. This estimate of cost shall be subject to approval by the City Engineer.

7.3.5 Extension of Water Main. Following execution of a water main extension agreement, the developer shall install the water main to the boundary of the property requiring service.

7.3.6 City Participation in Cost. The City will pay the developer the cost of the water main extended to the boundary of the property to be served in accordance with the terms, conditions and limitations established in the agreement. The developer shall sustain any costs in excess of the amount to be paid by the City.

7.3.7 Construction of the Water Distribution System to serve the interior of the property is the responsibility of the person or persons requesting service.

7.3.7.1 The interior water distribution system shall be installed in accordance with plans and specifications submitted to and approved by the City Engineer. Part 1, City of Columbia Regulations contains guidelines for the submission of plans.

7.3.8 All water main construction, both interior and off-site, shall be under the supervision of the City Engineer.

7.3.9 The water main extension and such portions of the interior water distribution system as may be approved and accepted by the City shall be deeded to the City by the Owner along with any easements required by the City.

7.3.10 Construction of the interior water distribution system may be carried out concurrently with construction of the water main extension to the boundary of the property requiring service.

7.3.11 Establishment of Water Service – Water service to the property will be established following:

7.3.11.1 Execution of the water main extension agreement.

7.3.11.2 Completion of the water main extension.

7.3.11.3 Approval, acceptance, and deeding of the water mains, both interior and off-site to the City.

7.3.11.4 Payment of applicable meter installation fees. Refer to Part 12, City of Columbia Regulations.

7.4 APPLICATIONS FOR INDIVIDUAL SERVICES, i.e., water meters, will be accepted upon satisfactory completion of construction and:

7.4.1 Receipt of properly prepared and certified record drawing plans from the engineer.

7.4.2 Receipt of Engineering Division Form 2, executed by the developer, requesting acceptance of the water system. Refer to part 6, paragraph 6.3.2.

7.4.3 Receipt of Engineering Division Form 3, Waiver of Lien, and list of materials installed from the contractor installing the water system. Refer to part 6, paragraph 6.3.3

7.4.4 Satisfactory completion of pressure and bacteriological testing of the water system.

7.4.5 Approval of the sanitary sewer system for service by the City Engineer; or evidence of approved wastewater disposal system if not served by City sewer.

7.4.6 Issuance of building and plumbing permits by the appropriate Building Official/Inspections Department.

7.4.7 All requirements have been met for installation of 25% of the meters in the project, or phase of the project if phasing has been approved. The limitations to 25% of the meters will be automatically lifted upon receipt and acceptance of the deeds and easements executed by the developer.

7.5 Sample Water Main Extension Agreement

STATE OF SOUTH CAROLINA)

WATER MAIN EXTENSION AGREEMENT

COUNTY OF RICHLAND)

THIS AGREEMENT made this _____ day of _____, 20___ by and between _____, hereinafter called the Developer and the City of Columbia, hereinafter called the City.

WITNESSETH:

For and in consideration of the mutual covenants of the parties, it is agreed as follows:

1. The Developer agrees:

a. To install, entirely at its own expense, a water main extension of appropriate size as approved by the City's Director of Engineering to serve the Developer's property which is describe as _____

The Developer understands and agrees that no construction of the water main shall be commenced until all plans and specifications, including field change orders, have been approved by the City's Director of Engineering and this Agreement is fully executed. The water main so extended to serve Developer's property shall run from the boundary of Developer's property and shall connect to the City's existing water system at a location approved by the City's Director of Engineering.

b. To install any required water distribution system internal to its property identified above in accordance with plans approved by the City's Director of Engineering and to provide one or more connection points at the boundary of its property as required by the City's Director of Engineering.

c. That is shall construct the water main and distribution system described above within exclusive easements approved by the City's Director of Engineering. The Developer understands and agrees that for the purpose of determining the total cost of construction of the water main extension, the cost of easements shall be actual costs not to exceed $_____ per linear foot.

d. That upon completion of construction and final inspection and approval by the City, it shall convey by deed tot eh City marketable title, free of encumbrances, to all of the following:

(1) The water main and all associated fixtures and real property necessary for its operation and maintenance.

(2) So much of the internal water distribution system as may be required by the City.

(3) All easements related to those items listed in (1) and (2) above.

2. The City agrees:

a. That upon completion of the above-described water main and distribution system it will accept title to the water main and so much of the distribution system as it shall require, and shall operate and maintain them as it does the remainder of its water system.

b. That the City shall pay to the Developer the total construction cost of the water main extension, providing, however, such payment shall be limited and defined as follows:

(1) No payment shall be made by the city until all required deeds and any necessary mortgage releases have been executed by the Developer and delivered to the City to complete the conveyances required by this Agreement. This requirement shall not be deemed satisfied until such deeds and mortgage releases have been reviewed and approved by the City Attorney.

(2) Payment by the City shall not exceed the estimated total construction cost a shown in Paragraph 2.b(7) below.

(3) The amount paid by the City shall not exceed the value of water meters actually placed in service within three years on the internal water meters shall, when applied for, be subject to any and all fees and charges then applicable under existing City ordinances and regulations. For the purpose of determining the amount to be paid by the City, the value of each meter in service shall be determined in accordance with the following schedule:

Meter Size	Amount
¾”	$335.00
1”	$507.00
1-1/2”	$679.00
2”	$1024.00
3”	$1713.00
4”	$3436.00
6”	$6881.00
8”	$13,762.00
10”	$27,525.00

(4) It is understood and agreed that the meters placed in service which shall be counted for the purpose of determining value as provided in Paragraph 2, b (3) above shall specifically exclude:

(a) Meter installed only to provide water for construction purposes; and

(b) Meter not installed directly on the internal distribution system; and

(c) Meters to serve and properties outside the boundaries of the property described in Paragraph 1, a above; and

(d) Meter installed for the sole purpose of irrigation.

(5) Such payment shall be made within ninety (90) days of a written demand by the Developer, providing, however, the City shall make no more than one (1) payment per year for a maximum of three (3) years from the date of the completion and acceptance of the water main by the City. If no demand is received from the Developer within three (3) years after

construction is effectively completed, the City may compute the amount due and tender it to the Developer within ninety (90) days after the expiration of the three-year period.

(6) Once demand is made by the Developer, or upon the expiration of three (3) years, whichever occurs first, the number of meters actually placed in service shall be determined and no meters subsequently installed shall be used to determine the amount to be paid by the City.

(7) The total cost of construction shall be equal to the actual contract cost, plus engineering not to exceed 10% and actual off-site easement acquisition costs not to exceed $____ per linear foot for any easement. The estimated cost of construction of the water main under this Agreement is $____. The engineer designing the water main extension shall certify both the amount of his fee, and its receipt, to the City's Director of Engineering.

3. It is mutually agreed by the parties that:

a. Applications for individual services, i.e., water meters, will be accepted upon satisfactory completion of construction of water mains and:

(1) Receipt of properly prepared and certified "record drawing" plans.

(2) Receipt of Engineering Division Form #2, executed by the Developer, requesting acceptance of the water system.

(3) Receipt of Engineering Division Form #3, Waiver of Lien and list of materials installed from the contractor installing the water system.

(4) Satisfactory completion of pressure and bacteriological testing of the water system.

(5) Approval of the sanitary sewer system for service by the City's Director of Engineering; or evidence of an approved wastewater disposal system if not served by City sewer.

(6) Receipt of SCDHEC Permit to Operate.

(7) The building permit and plumbing permit for the residential units, building or other facilities to be served have been issued by the appropriate Building Official or Inspection Department.

b. Applications shall not be accepted for the project or phase of the project if phasing is approved, until the deeds and easements executed by the Developer are received and approved by the City's Director of Engineering.

c. The effective completion date of construction of the water main shall be the date the City receives all items in Paragraph 3a above excepting item (7). No meters to be counted to determine the amount to be paid by the City will be set prior to that date.

d. If at any future time should any part of the property described hereinabove become contiguous to the City limits of Columbia, the Developer, its/his/her or their heir(s), successor(s) and/or assign(s) will cause all of said property to be annexed to the City of Columbia. The Developer agrees to execute simultaneous herewith a covenant, in its/his/her or

their heir(s), successor(s) and/or assign(s) to cause said property to be annexed to the City, should any part of the property become contiguous to the limits of Columbia.

Failure to comply with the above will result in the City terminating existing service or refusing to extend service to any portion of the property not then served by the line referred to hereunder. Service will be reinstated or service will be governed by the other terms and conditions herein. Additionally, service will not reinstated until such time as all required fees and costs required by the City for reinstatement have been paid to the City.

4. This Agreement shall be binding on the parties, their heirs, successors and assigns.

(CORPORATE SIGNATURE PAGE)

IN WITNESS WHEREOF, the undersigned have hereunto set their hands and seals on the date first hereinabove written.

WITNESSETH:

(NAME OF DEVELOPER)
_____ BY: _____

_____

_____

THE CITY OF COLUMBIA
_____ BY: _____

STATE OF SOUTH CAROLINA)
COUNTY OF)

ACKNOWLEDGEMENT

The foregoing instrument was acknowledged before me this _____ day of _____, 20___ by _____ of _____ on

(Name of Officer and Title) (City and State)

behalf of the within-named Party.

_____

NOTARY PUBLIC FOR _____

MY COMMISSION EXPIRES_____

STATE OF SOUTH CAROLINA)
COUNTY OF)

ACKNOWLEDGEMENT

The foregoing instrument was acknowledged before me this _____ day of _____, 20___ by _____ of _____ on

(Name of Officer and Title) (City and State)

behalf of the within-named Party.

_____

NOTARY PUBLIC FOR _____

MY COMMISSION EXPIRES_____

(INDIVIDUAL SIGNATURE PAGE)

IN WITNESS WHEREOF, the undersigned have hereunto set their hands and seals on the date first hereinabove written.

WITNESSETH:

(NAME OF DEVELOPER)
_____ BY: _____

_____

_____

THE CITY OF COLUMBIA
_____ BY: _____

STATE OF SOUTH CAROLINA)
COUNTY OF)

ACKNOWLEDGEMENT

The foregoing instrument was acknowledged before me this _____ day of _____, 20___ by the within-named Party.

_____

NOTARY PUBLIC FOR _____

MY COMMISSION EXPIRES_____

STATE OF SOUTH CAROLINA)
COUNTY OF)

ACKNOWLEDGEMENT

The foregoing instrument was acknowledged before me this _____ day of _____, 20___ by the within-named Party.

_____

NOTARY PUBLIC FOR _____

MY COMMISSION EXPIRES_____

PART 8: SPECIFICATION FOR SANITARY SEWER MAIN EXTENSION
TABLE OF CONTENTS

Paragraph	Description	Page No.
8.1	General	8-1
8.2	Sanitary Sewer Main Extension Agreement	8-1
8.3	Procedures	8-1
8.4	Applications for Individual Services	8-3
8.5	Sample Sanitary Sewer Agreement	8-4

CITY OF COLUMBIA
PART 8
SANITARY SEWER MAIN EXTENSION

8.1 GENERAL – Service will be extended into those areas not presently served by the City of Columbia sanitary sewer system in accordance with the following:

8.1.1 Inside City Limits – The City will install, within a reasonable time after request, an adequate sanitary sewer main to the property requiring service. The City is responsible for extensions to master parcels within the City limits and not to individual parcels that have been subdivided.

8.1.2 Outside City Limits – There are two alternatives for extending sanitary sewer mains to provide service. The first, and most common, is for the person requesting service to enter into a Sanitary Sewer Main Extension Agreement with the City. This agreement provides for City participation in the cost of engineering and construction. The person requesting service must retain in engineer to complete studies to determine feasibility, best method and cost of providing service and to prepare construction plans. Refer to Section 8.2 for procedures for execution of the Sanitary Sewer Main Extension Agreement. The second alternative is for the person requesting service to have his engineer design and prepare construction plans for the extension. Following approval of the construction plans by the City Engineer, the person requesting service lets a contract for construction. The design, plans and construction must comply with City Design Criteria and Regulations. This method does not allow City participation in the cost of engineering or construction. Refer to Parts 1 and 3 for procedures for Submission of Plans and Design Criteria.

8.1.3 Outside City Limits but Contiguous to City Limits – It is City practice to provide service only after the property is annexed into the City. Following annexation, Section 8.0.1 above will apply.

8.2 SANITARY SEWER MAIN EXTENSION AGREEMENT – A Sanitary Sewer Main Extension Agreement is a contract entered into between the City and the person or persons requesting sanitary sewer service wherein the City agrees to provide sanitary sewer service to property outside the City limits not presently served by the City's sanitary sewer system. See sample Sanitary Sewer Main Extension Agreement attached. Refer to paragraph 8.4.

8.3 PROCEDURES – The procedures for Sanitary Sewer Main Extension Agreements are as follows:

8.3.1 Execution of Sanitary Sewer Main Extension Agreement – In those areas outside the City limits, but not contiguous to the City limits, the developer may obtain service by entering into a Sanitary Sewer Main Extension Agreement with the City.

8.3.2 Sanitary Sewer Main Size. The City Engineer shall establish and/or approve the size of the sanitary sewer main deemed adequate to serve the property requiring service.

8.3.3 Design of the Sanitary Sewer Main Extension. Construction plans for the proposed sanitary sewer extension shall be prepared by a registered professional engineer, licensed to practice in South Carolina, and shall be submitted in accordance with procedures set forth in Part 1, City of Columbia Regulations.

8.3.4 Cost of the Sanitary Sewer Main Extension. The developer's total cost of construction shall be equal to the actual contract cost for installation of the gravity sewer main, plus engineering fees not to exceed 10% of the actual contract cost, plus actual off-site easement acquisition costs not to exceed the cost per linear foot specified in the sanitary sewer main extension agreement. The engineer shall provide the City with an estimate of the total cost of construction prior to execution of a sanitary sewer main extension agreement. This estimate of cost shall be subject to approval by the City Engineer.

8.3.5 Extension of sanitary sewer main – Following execution of a Sanitary Sewer main Extension Agreement,the developer shall install the sanitary sewer main to the boundary of the property requiring service.

8.3.6 City Participation is Cost. The City will pay the developer the cost of the sanitary sewer main extended to the boundary of the property to be served in accordance with the terms, conditions and limitations established in the sanitary sewer main extension agreement. The developer shall sustain any costs in excess of the amount to be paid by the City.

8.3.7 Construction of Sanitary Sewer Collector System – Construction of the sanitary sewer collector system to serve the interior of the property is the responsibility of the person or persons requesting service.

8.3.7.1 8.2.7.1 The interior sanitary sewer collection system shall be installed in accordance with plans and specifications submitted to and approved by the City Engineer. Part 1, City of Columbia Regulations contains guidelines for the submission of plans.

8.3.8 All sanitary sewer main construction, both interior and off-site, shall be under the supervision of the City Engineer.

8.3.9 The sanitary sewer main extension and such portions of the interior sanitary sewer collection system as may be approved and accepted by the City shall be deeded to the City by the Owner, along with any easements required by the City.

8.3.10 Construction of the interior sanitary sewer collection system may be carried out concurrently with construction of the sanitary sewer main extension to the boundary of the property requiring service.

8.3.11 Establishment of Sanitary Sewer Service. Sanitary sewer service to the property will be established following:

8.3.11.1 Execution of the sanitary sewer main extension agreement.

8.3.11.2 Completion of the sanitary sewer main extension.

8.3.11.3 Approval, acceptance, and deeding of the sanitary sewer mains, both interior and off-site, extension and collector systems to the City.

8.3.11.4 Payment of applicable tap and sewer plant expansion fees. Refer to Part 13, City of Columbia Regulations.

8.4 APPLICATIONS FOR INDIVIDUAL SERVICES, i.e., sewer taps, will be accepted upon completion of construction and:

8.4.1 Receipt of properly prepared and certified record drawing plans by the engineer.

8.4.2 Receipt of Engineering Division Form 2, executed by the developer requesting acceptance of the sewer system. Refer to Part 6, paragraph 6.3.2.

8.4.3 Receipt of Engineering Division Form 3, Waiver of Lien, and list of material installed from the contractor installing the sanitary sewer system. Refer to Part 6, paragraph 6.3.3.

8.4.4 Receipt of certification from the developer's engineer that infiltration/exfiltration is within limits specified in City Regulations.

8.4.5 Receipt of certification from the developer's engineer of the actual quantities installed and measured in the field and that the engineering fees as established and approved herein were received.

8.5 Sample Sanitary Sewer Agreement

STATE OF SOUTH CAROLINA)

SANITARY SEWER MAIN
EXTENSION AGREEMENT

COUNTY OF)

THIS AGREEMENT entered into this _____ day of _____, 20___, by and between _____, hereinafter known as the Developer, and the City of Columbia, hereinafter known as the City.

For the sum of Five ($5.00) Dollars and the mutual promises herein contained, the parties agree as follows:

1. The Developer will intall, or cause to be installed, a sanitary sewer line, with all associated pump stations, fixtures and equipment as shall be required to serve property of the Developer located _____. The sanitary sewer trunk line shall be constructed from Point "A" to Point "B" as shown on the map which is on file in the office of the City's Director of Engineering under file reference _____, and incorporated herein by reference.

2. Prior to construction, the Developer will submit construction plans to the City's Director of Engineering for review and approval. Construction plans shall be prepared by the registered professional engineer licensed to practice in South Carolina and shall conform to the standards of design, construction and material normally used and required by the City.

3. The engineering fees shall be established in accordance with the "Suggested Median Fees for Professional Engineering Services" as recommended by the National Society of Professional Engineers, and shall be subject to the approval of the City's Director of Engineering.

4. The Developer will be responsible for obtaining all easements necessary for the construction of the sanitary sewer line described above. In the event condemnation is required, the City agrees, in its name, to promptly commence and prosecute such condemnation. The Developer understands and agrees that for the purpose of determining the total cost of construction of the sanitary sewer extension, the cost of easements shall be actual costs not to exceed $_____ per lineal foot.

5. The construction cost shall be determined by letting a contract for the installation of the sanitary sewer main extension. The letting of the contract shall conform to the following conditions.

a. The project will be approved for advertisement by the City.

b. The project will be advertised for a minimum of two weeks in both "The State" newspaper and "The Black News."

c. Proof of advertisement will be provided to the City prior to the bid opening.

d. Bids will be forwarded to the City's Department of Engineering to be opened jointly by the City and the Developer as specified in the advertisement for bids, with the City Clerk and the City's Director of Engineering or their representatives in attendance.

e. The contract will be awarded to the lowest responsible bidder. The City shall determine whether bidder is responsible, and approve the award of the contract. The City shall have the authority to waive technicalities and reject any or all bids and to approve such awards as, in its opinion appears to be in the best interest of the City.

f. A minimum of three bids must be received prior to the bid opening.

6. The total cost for extending the sanitary sewer main to the boundary of the property to be served shall be determined as the sum of the engineering fees, easement acquisition costs, and the construction costs including materials and labor for installation of the gravity portion of the sanitary sewer main. The final total cost shall be determined by the City's Director of Engineering with construction cots being based on unit bid prices previously approved and actual quantities installed and measured in the field. The estimated total cost is agreed to be $_____. It is understood and agreed that the estimated cost is the maximum amount that the City will pay to the Developer. Expenditures not covered on the bid proposal form for which payment under this Agreement is desired, must be submitted as change orders by the Developer's engineer to the Developer, contractor and City's Director of Engineering in turn for approval.

7. Payment of the total cost for this sanitary sewer extension shall be the responsibility of the Developer.

8. Prior to placing the sanitary sewer main extension in service the registered professional engineer who prepared the construction plans shall certify in writing the actual quantities installed and measured in the field, that the engineering fees, as established and approved herein, were received and that construction meets all specifications and requirements of the City. The Developer's engineer shall provide the City with "record drawing" plans.

9. In consideration of the payment described in Paragraph 7 above, the City shall issue sewer tap certificates to the Developer. The number of sewer tap certificates issued shall be determined by dividing the total cost for the sanitary sewer extension, excluding the costs of pump stations and force mains, by three hundred dollars ($300.00). (or other costs, excluding sewer plant expansion fees, for a single family residence as established in the ordinances on the date of execution of this Agreement by the City) and rounding to the next lower whole number. The sewer tap certificates so issued shall be negotiable as payment for sewer taps within the property to be served as described in Paragraph 1 above provided, however, they shall not be negotiable as payment of sewer plant expansion fees.

10. The City will charge each new connection a sewer tap fee, a sewer plant expansion fee and monthly sewer service charge according to the then applicable rates; provided, however, the sewer tap certificates issued hereunder may be surrendered in lieu of the then prevailing sewer tap fee charge for one single residential tap, or its equivalent, when used in multiples for commercial taps. It is understood and agreed that sewer service charges at rates set by City Ordinance shall commence 60 days after the date of the Sewer Service Permit, or on the date of connection to the system, whichever is earlier.

11. It is understood that present City policy is to provide sewer service to areas contiguous to the City only upon annexation of the area to the City. The Developer agrees that at any future time should any part of the property described hereinabove become contiguous to the City limits of Columbia, the Developer, its/his/her or their heir)s), successor(s) and/or assign (s) will cause all of said property to be annexed to the City. The Developer agrees to execute simultaneous herewith a covenant, in recordable form and to run with the land, that requires the Developer, its/his/her or their heir(s), successor(s) and/or assign(s) to cause said property to be annexed to the City should any part of the property become contiguous to the City limits of Columbia.

Failure to comply with the above will result in the City terminating existing service or refusing to extend service to any portion of the property not then served by the line referred to hereunder. Service will be reinstated or service will extended only when such property is annexed to the City, all of which shall be governed by the other terms and conditions herein. Additionally, service will not be reinstated until such time as all required fees and costs required by the City for reinstatement have been paid to the City.

12. Construction of the sanitary sewer collection system to serve the interior of the property is the responsibility of the Developer. The interior collection system shall be installed according to plans and specifications submitted to, and approved by, the City's Director of Engineering; said installation to be under the supervision of the City's Director of Engineering. Construction of the sanitary sewer collection system may be accomplished concurrently with construction of the sanitary sewer main being extended to the boundary of the property to be served.

13. Such portions of the sanitary sewer collecton system as may be approved and accepted by the City shall be deeded to the City, at no cost to the City, by the Developer. Said deed shall include such easements as necessary for ingress, egress, operation and maintenance.

14. Application for individual services, i.e., sewer taps, will be accepted upon completion of construction and:

a. Receipt and approval of deeds by the City's Director of Engineering. (Refer to Paragraph 13 above).

b. Receipt of properly prepared and certified "record drawing" plans. (Refer to Paragraph 8 above).

c. Receipt of Engineering Division Form 2, executed by the Developer, requesting acceptance of the sewer system.

d. Receipt of Engineering Division Form 3, Waiver of Lien, and list of materials installed, from the contractor installing the sanitary sewer system.

e. Receipt of certification from the Developer's engineer that infiltration/exfiltration is within limits specified is within limits specified in City Regulations.

f. Receipt of certification from the Developer's engineer of the actual quantities installed and measured in the field and that the engineering fees as established and approve herein were received.

g. Receipt of SCDHEC Permit to Operate.

h. Plumbing Permits for the structure for which application is being made have been issued by the appropriate Building Official/Inspections Department.

i. All requirements have been met for installation of the water meters in the project, or phase of the project if phasing has been approve. (Refer to Part 7 of the City of Columbia Regulations.)

15. The applications for service shall not be accepted for the subdivision, or phase of the subdivision if phasing has been approved, until all requirements of this Agreement have been met, the tap certificates referred to herein have been issued to the Developer, and the interior water and sewer systems have been deeded to and accepted by the City.

16. The terms and conditions of this Agreement shall be binding on the parties, their heirs, successors and/or assigns.

(CORPORATE SIGNATURE PAGE)

IN WITNESS WHEREOF, the undersigned have hereunto set their hands and seals on the date first hereinabove written.

WITNESSETH:

(NAME OF DEVELOPER)

_____ BY: _____

_____

_____

THE CITY OF COLUMBIA

_____ BY: _____

STATE OF SOUTH CAROLINA)
COUNTY OF)

ACKNOWLEDGEMENT

The foregoing instrument was acknowledged before me this _____ day of _____, 20___ by _____ of _____ on

(Name of Officer and Title) (City and State)

behalf of the within-named Party.

_____

NOTARY PUBLIC FOR _____

MY COMMISSION EXPIRES_____

STATE OF SOUTH CAROLINA)
COUNTY OF)

ACKNOWLEDGEMENT

The foregoing instrument was acknowledged before me this _____ day of _____, 20___ by _____ of _____ on

(Name of Officer and Title) (City and State)

behalf of the within-named Party.

_____

NOTARY PUBLIC FOR _____

MY COMMISSION EXPIRES_____

(INDIVIDUAL SIGNATURE PAGE)

IN WITNESS WHEREOF, the undersigned have hereunto set their hands and seals on the date first hereinabove written.

WITNESSETH:

(NAME OF DEVELOPER)
_____ BY: _____

_____

_____

THE CITY OF COLUMBIA
_____ BY: _____

STATE OF SOUTH CAROLINA)
COUNTY OF)

ACKNOWLEDGEMENT

The foregoing instrument was acknowledged before me this _____ day of _____, 20___ by the within-named Party.

_____

NOTARY PUBLIC FOR _____

MY COMMISSION EXPIRES_____

STATE OF SOUTH CAROLINA)
COUNTY OF)

ACKNOWLEDGEMENT

The foregoing instrument was acknowledged before me this _____ day of _____, 20___ by the within-named Party.

_____

NOTARY PUBLIC FOR _____

MY COMMISSION EXPIRES_____

CITY OF COLUMBIA REGULATIONS
PART 9
WATER SERVICE TO MOBILE HOME PARKS

DELETED

PART 10: SPECIFICATION FOR ENCROACHMENT PERMIT: STREET/ROAD NOT OWNED BY CITY OF COLUBMIA

TABLE OF CONTENTS

Paragraph	Description	Page No.
10.1	When to Obtain Permit	10-1
10.2	Approval by City Engineer	10-1
10.3	Approval by Appropriate Agency	10-1
10.4	Where to Obtain Permit Forms	10-1
10.5	Information Required for Permit	10-1
10.6	Tree Root Protection	10-1
10.7	Sample Agreement	10-3

CITY OF COLUMBIA REGULATIONS
PART 10
ENCROACHMENT PERMIT: STREET/ROAD NOT OWNED BY CITY OF COLUBMIA

10.1 WHEN TO OBTAIN PERMIT: Where work is contemplated within the rights-of-way of roads/streets maintained by the South Carolina Department of Highways and Public Transportation, Lexington County, Richland County or the Town of Irmo, a permit must be obtained. When the work involves facilities belonging, or to be conveyed, to the City for operation and maintenance, the permit application must be submitted in the City's name. The developer is required to provide a one year warranty to the City for workmanship prior to the City signing or submitting the encroachment permit.

10.2 APPROVAL BY CITY ENGINEER: The completed application with required sketch, must be presented to the City Engineer for verification and authentication prior to submission to the appropriate agency.

10.3 APPROVAL BY APPROPRIATE AGENCY: Following review and authentication, the Department of Utilities and Engineering will submit the application to the appropriate agency.

10.4 WHERE TO OBTAIN PERMIT FORMS: Application forms may be obtained from the Department of Utilities and Engineering, 1136 Washington Street, Columbia, South Carolina. Or, the District Engineer's Office, South Carolina Department of Highways and Public Transportation, Shop Road, Columbia; Richland County Engineer's Office, 400 Powell Road, Columbia; Lexington County Engineer's Office, 212 South Lake Road, Lexington; and the Town of Irmo can provide forms for their respective jurisdictions.

10.5 INFORMATION REQUIRED FOR PERMIT: Information required for the application form is as follows:

10.5.1 The appropriate name, road number and street number.

10.5.2 Location of proposed work in relation to road right-of-way.

10.5.3 Location of all structures to include trees, catch basins, manholes, street lights, utilities, curbs… Permit shall also indicate distance between proposed work and existing facilities.

10.5.4 Pavement width.

10.5.5 Length and width of pavement crossing. Indicate whether crossing is to be bored or cut, depending upon type of construction.

10.5.6 Written description of work to be accomplished.

10.6 TREE ROOT PROTECTION: Attention is directed to Section 75.0, Part 15, General Specifications, of these regulations. Installation of underground cables, conduits, pipes, etc., shall conform to those requirements for protection of tree roots within street rights-of-way.

10.7 Sample Agreement

Agreement between the City of Columbia and the South Carolina Department of Highways and Public Transportation To Allow the City to Install Routine Service Connections Without a Permit for Each Individual Connection

STATE OF SOUTH CAROLINA) AGREEMENT
)
COUNTY OF RICHLAND)

This agreement made and entered into this _____ st day of January, 20___, by and between the City of Columbia (hereinafter called the City) and the South Carolina Department of Highways and Public Transportation (hereinafter called the Department).

WHEREAS, it is the desire of the City to enter into an agreement with the Department whereby the City will be allowed to make routine service connections to the City's water and sewer lines located within the Department's right-of-way for streets and highways;

WITNESSETH, that in consideration of the mutual undertakings hereinafter set out, the City and the Department agree:

A. A routine service connection shall be defined as a pipe not greater than 6" in diameter providing service to residences, commercial buildings, institutional buildings, and other such buildings. It excludes subdivisions and other areas that water might be conveyed for the purpose of reselling and sewer lines that serve as collectors.

B. The present procedure of submitting prior written application for encroachment permits and the granting thereof by the Department for routine service connections will be discontinued and City forces will proceed with a written permit approved by the City Engineer. All work will be performed by City forces and will be confined to City-owned facilities.

C. This agreement will be limited to service connections to existing facilities and will not apply to construction projects (new installations). Furthermore, this agreement, except as hereinafter provided, shall only apply to crossings that do not require the cutting of pavements. All pavement crossings will be by the dry bore method and no cutting or other disruption of existing pavements shall be made until the Department's local Resident Maintenance Engineer's office for the County in which the work is being performed has been notified.

D. The City's procedure for pavement repair, inspection, and enforcement as set forth in the City Ordinance relating to the installation of utility lines now being applied to all city streets inside the City limits, including all work by City forces outside the City limits, will be continued. This procedure also includes inspection at the time the work is being done, and follow-up inspection within 60 days and again one year after the service connection is completed.

E. Adequate provisions shall be made for the protection of the highway traffic at all times. Necessary detours, barricades, warning signs, and watchmen shall be provided by and at the expense of the City. The work shall be planned and carried out so that there will be the least possible inconvenience to the highway traffic. The city agrees to observe all rules and regulations of the Department while carrying on the work contemplated herein and take all other precautions that circumstances warrant.

F. All work shall conform to the Specification set forth in the City Ordinance. Adequate provisions shall be made for maintaining the proper drainage of the highway. All work shall be subject to the supervision and satisfaction of the Department.

G. If, in the opinion of the State Highway Engineer, it should ever become necessary to move or remove the encroachment, or any part thereof, contemplated herein, on account of change in location of the highway, widening of the highway or for any other sufficient reason, such moving or removing shall be done on demand of the Department at the expense of the City.

H. If, and when, the encroachment contemplated herein shall be moved or removed, either on demand of the Department or at the option of the City, the highway and facility shall immediately be restored to their original condition at the expense of the City.

I. All work in connection with the construction, maintenance, moving or removing of the encroachment contemplated herein shall be done by and at the expense of the City.

J. It is distinctly understood that this agreement does not in any wise grant or release any rights lawfully possessed by the abutting property owners. Any such rights necessary shall be secured from said abutting property owners by the City.

K. Once each week the City shall provide the District Engineer two copies of the written report listing each routine service connection made during the preceding week. This report shall furnish the location and other pertinent information regarding the installation.

L. All other service connections, except routine service connections as described herein, and all other work within the rights-of-way are excluded from this agreement, and are subject to written permit by the Department prior to performing such work.

M. The City agrees to assume any and all liability the Department might otherwise have in connection with accidents or injuries to persons, or damage to property, including the highway, that may be caused by the construction, maintenance, use, moving or removing of the encroachment contemplated herein and agrees to indemnify the Department for any liability incurred or damage sustained by reason of the past, present, or future existence of said encroachment, provided for under this agreement.

N. This agreement may be cancelled immediately upon written notice by the parties hereto. Further more, this agreement shall be renewed on _____, 19____, and January 1 of each successive year thereafter.

WITNESSES:

_____

_____
As to City

CITY OF COLUMBIA

By: _____

WITNESS:

_____

_____

_____

S.C. DEPARTMENT OF HIGHWAYS
AND PUBLIC TRANSPORTATION

By:

State Highway Engineer

APPROVED: _____
Chief Commissioner

PART 11: SPECIFICATION FOR APPLICATION FOR CITY ENCROACHMENT PERMIT
TABLE OF CONTENTS

Paragraph	Description	Page No.
11.1	General Information	11-1
11.2	Who Must Obtain Permit	11-1
11.3	Boring Required on Major Streets	11-1
11.4	Emergency Cutting	11-1
11.5	Inspections	11-1
11.6	Bond Required	11-1
11.7	Construction and Relocation Costs	11-2
11.8	Permit Fee	11-2
11.9	Construction	11-2
11.10	Tree Root Protection	11-2
11.11	Ordinance	11-3

CITY OF COLUMBIA REGULATIONS
PART 11
APPLICATION FOR CITY ENCROACHMENT PERMIT

11.1 GENERAL INFORMATION

11.1.1 Application for City encroachment permit may be made and permit form secured at the Department of Utilities and Engineering, second floor, 1136 Washington Street, Columbia, South Carolina. The request for such permit shall be accompanied by an appropriate drawing, if applicable, showing the location of the proposed utility installation and any other pertinent information necessary to determine conflicts with other utilities requested by the City Engineer.

11.2 WHO MUST OBTAIN PERMIT

11.2.1 All utility companies, both public and private, oil companies, gas companies, pipeline companies, contractors, developers, engineers or any person, firm or corporation or association not specifically excluded by law, desiring to construct, install or locate a pipeline, utility line, cable or other facility within the right-of-way of highways or streets within the City.

11.3 BORING REQUIRED ON MAJOR STREETS

11.3.1 Only bored cased crossing shall be permitted within the paved portion of major or arterial streets, except when soil and other conditions make boring impractical as determined by the City Engineer or when an emergency is deemed to exist. All crossings shall be a minimum of twenty four (24) inches below the paved surface unless otherwise specifically approved by the City Engineer.

11.4 EMERGENCY CUTTING

11.4.1 An emergency shall be deemed to exist when the preservation of the peace, health and safety of the City and the inhabitants thereof is jeopardized. The determination of an emergency shall be made by an official of the utility, designated in writing and filed with the City Engineer. In crossing a major or arterial roadway when it is deemed an emergency, a cut may be made only after written approval by the designated official of the utility. This approval must be forwarded to the Director of Utilities and Engineering within twenty-four (24) hours after the cut is made. A permit fee to cover inspection shall be charged and the applicant shall be responsible for permanent repair of the cut in accordance with the current City specifications.

11.5 INSPECTIONS

11.5.1 The line, boring or paving cut repair must be inspected and approved by the Department of Utilities and Engineering upon completion of the project and again one (1) year from that date during which period the applicant and/or owner shall remain liable for cost of repairs and any damages which may be due the City arising from the work performed.

11.6 BOND REQUIRED

11.6.1 In addition to the permit fee to cover inspection, the applicant shall file with the City Clerk a bond in the sum of $5,000.00 approved by the City Manager and the City Attorney as to form.

11.7 CONSTRUCTION AND RELOCATION COSTS

11.7.1 Prior to construction of any underground utility line, pipeline, cable line, etc., under a paved street the applicant shall agree as a condition of the permit that the construction of said underground utility line, pipeline, cable line, etc., shall be constructed at the applicant's sole risk and expense and that upon demand by the city, when such demand is deemed necessary for a public street purpose, any such underground utility line, pipeline, cable line, etc., shall be relocated by the applicant at the applicant's sole expense.

11.8 PERMIT FEE: At the time of filing the application, a permit fee to cover inspection shall be paid to the City in the amount of $10.00.

11.9 CONSTRUCTION: The construction will be accomplished in accordance with specifications of the City Engineer as shown on the attached drawing.

11.10 TREE ROOT PROTECTION: Attention is required to Section 75.0, Part 15, General Specifications, of these regulations. Installation of underground cables, conduits, pipes, etc., shall conform to those requirements for protection of tree roots within street rights-of-way.

11.11 ORDINANCE

Amending Chapter 30 of the City code by Adding
Article VIII Relating to Installation of Utility
Lines in City Streets

WHEREAS, it is deemed necessary an in the public interest to establish a policy for the construction of utility lines pertaining to all utility companies, both public and private, oil companies, gas companies, pipeline companies, contractors, developers, engineers or any person, firm or corporation not specifically excluded by law, desiring to construct, install or locate a pipeline, utility line, cable or other facility within the paved portion of major or arterial roadways, highways, or streets, now, therefore,

BE IT ORDAINED by the City Council of the City of Columbia, South Carolina, this 3rd day of January, 1978, that Chapter 30 of the Code is amended by adding the following:

ARTICLE VIII-UTILITIES

Sec. 30-150. Permit Required.

a. Prior to constructing any underground pipeline, utility line, cable line, etc., under a paved public street a permit shall be secured from the office of the City Engineer. The request for such permit shall be accompanied by an appropriate drawing, if applicable, showing the location of the proposed utility installation and any other pertinent information necessary to determine conflicts with other utilities requested by the City Engineer.

b. The construction will be accomplished in accordance with specifications of the City Engineer as shown on the attached drawing.

c. At the time of filing the application a permit fee to cover inspection shall be paid to the City in the amount of $10.00.

Sec. 30-151. Boring Required on Major Streets.

Only bored or cased crossings shall be permitted within the paved portion of major or arterial streets, except when soil and other conditions make boring impractical as determined by the City Engineer or when an emergency is deemed to exist. All crossings shall be a minimum of twenty-four (24) inches below the paved surface unless otherwise specifically approved by the City Engineer.

Sec. 30-152. Emergency Cutting.

An emergency shall be deemed to exist when the preservation of the peace, health and safety of the City and the inhabitants thereof is jeopardized. The determination of any emergency shall be made by an official of the utility designated in writing filed with the City Engineer. In crossing a major or arterial roadway when it is deemed an emergency, a cut may be made only after written approval by the designated official of the utility which must be forwarded to the City Engineer within twenty-four (24) hours after the cut is made. A paving cut permit fee to cover inspection shall be charged, and the applicant shall be responsible for permanent repair of the cut in accordance with the current City specifications.

Sec. 30-153. Inspections.

The line, boring or paving cut repair must be inspected and approved by the City Engineer upon completion of the project and again one (1) year from that date during which period the applicant and/or owner shall remain liable for cost of repairs and any damages which may be due the City arising from such work.

Sec. 30-154. Bond Required.

In addition to the permit fee to cover inspection, the applicant shall file with the City Clerk a bond in the sum of $5,000.00 approved by the City Manager and the city Attorney as to form.

Sec. 30-155. Construction and Relocation Costs.

Prior to construction of any underground utility line, pipeline, cable line, etc., under a paved street the applicant shall agree as a condition of the permit that the construction of said underground utility line, pipeline, cable line, etc., shall be constructed at the applicant's sole risk and expense and that upon demand by the City, when such demand is deemed necessary for a public street purpose, any such underground utility line, pipeline, cable line, etc., shall be relocated by the applicant at the applicant's sole expense.

This ordinance shall be effective on January 3, 1978.

Requested by:

s/_____
Mayor

s/_____
City Manager

Approved by:
s/_____
City Manager

Approved as to form:

s/_____
City Clerk

s/_____
City Attorney

ATTEST:

Introduced: _____

_____

Final Reading: _____

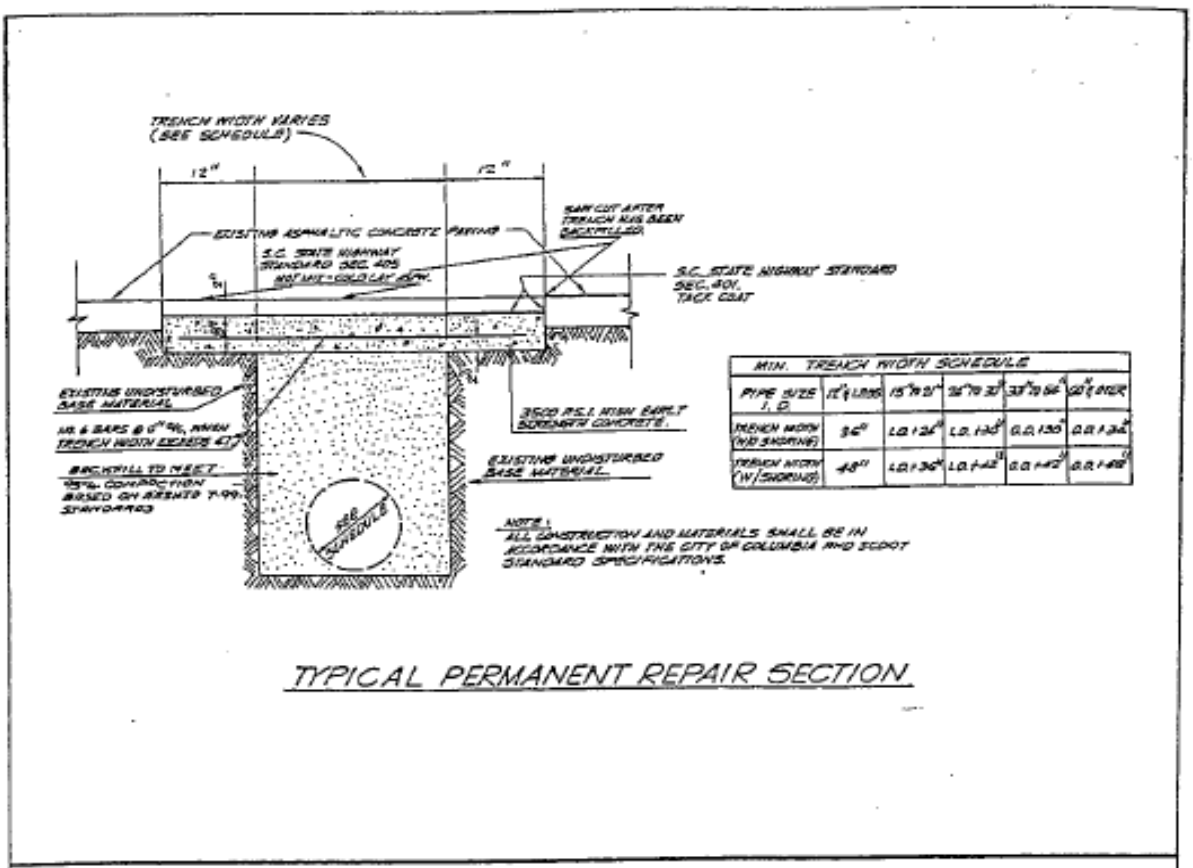

MIN. TRENCH WIDTH SCHEDULE					
PIPE SIZE I.D.	12" & LESS	15" TO 21"	24" TO 33"	36" TO 54"	60" & OVER
TRENCH WIDTH (W/O SHORING)	36"	I.D. + 24"	I.D. + 30"	O.D. + 30"	O.D. + 36"
TRENCH WIDTH (W/SHORING)	48"	I.D. + 36"	I.D. + 42"	O.D. + 42"	O.D. + 48"

TYPICAL PERMANENT REPAIR SECTION

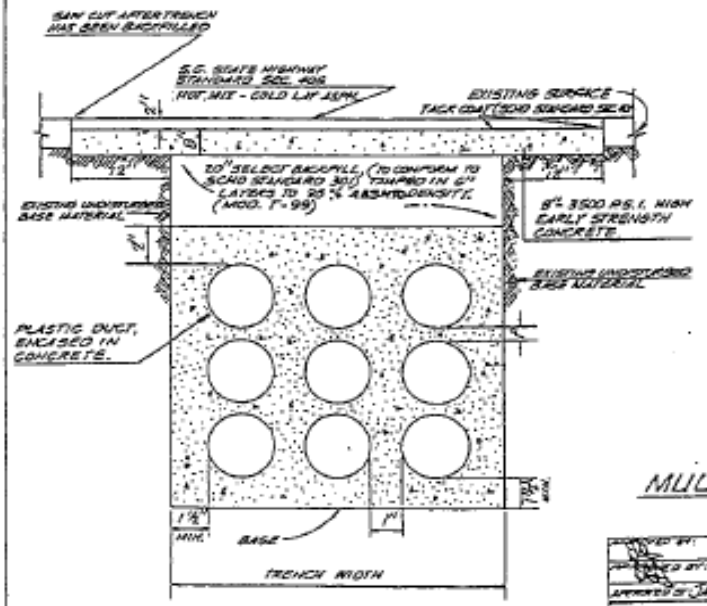

TYPICAL
MULTI-DUCT SYSTEM

REVISION: TRENCH WIDTH CHANGED FROM "MAX" TO "MIN"		
REVISION: TRENCH WIDTHS REVISED		
TITLE & COMPACTION CHANGE, MIN. & MAX. ADDED TO DIMENS.		

CITY OF COLUMBIA
DEPARTMENT OF ENGINEERING
COLUMBIA, SOUTH CAROLINA

TYPICAL PERMANENT PAVEMENT REPAIR SECTIONS.

35-B-2

1 OF 1

PART 12: SPECIFICATION FOR APPLICATION FOR NEW WATER SERVICE
TABLE OF CONTENTS

Paragraph	Description	Page No.
12.1	General	12-1
12.2	Agencies Assigning Street Numbers	12-1
12.3	Required Verifications	12-1
12.4	Procedures for Resumption of Water Service	12-1
12.5	Fire Protection Systems	12-2
12.6	Long Line Service	12-2
12.7	Cross Connection Control/ Backflow Prevention	12-5
12.8	Main Line Water Taps	12-6
12.9	Special Power of Attorney Form	12-7

CITY OF COLUMBIA REGULATIONS
PART 12
APPLICATION FOR NEW WATER SERVICE

12.1 GENERAL: Application for new water service involves a contractual arrangement which requires the signature of the property owner or his legally appointed representative. See attached special power of attorney form. Application for new service must be made at the Department of Utilities and Engineering, seventh floor, 1136 Washington Street, Columbia, South Carolina. The applicant must provide the street and number where water service is desired; whether the service is to be residential or commercial and whether the building(s) is served by septic tank, City sanitary sewer system, or other sanitary sewer system.

12.2 AGENCIES ASSIGNING STREET NUMBERS: The agencies authorized to assign street numbers are:

12.2.1 Inside the Columbia City Limits: Department of Utilities and Engineering, seventh floor, 1136 Washington Street, Columbia, S.C.

12.2.2 Richland County: Planning Dept., 2020 Hampton St., Columbia, S.C.

12.2.3 Lexington County: Planning and GIS Dept., 212 Southlake Road, Lexington, S.C.

12.3 REQUIRED VERIFICATIONS: A department staff member verifies the following:

12.3.1 That service is available and adequate.

12.3.2 That the location to be served is inside/outside the City limits. If outside but contiguous to city limits, applicant is informed that the property owner must petition to be annexed or execute a Declaration of Covenant for contiguous properties, prior to being served

12.3.3 That the location of service will be within a private easement, City street, Highway Department right-of-way, or County road. This is done to determine what type permit, if any is required.

12.3.4 That the customer is aware that he will be responsible for having a plumber install all piping, and in some cases, a backflow prevention device on the building side of the meter. See Paragraph 12.9.

12.3.5 That the customer is aware that he will be responsible for having his plumber or building contractor construct the meter box for all meters 4” in diameter or larger. Construction shall be in accordance with plans and specifications contained in the City’s standard details and shall be completed prior to meter installation.

12.4 PROCEDURES FOR RESUMPTION OF WATER SERVICE

12.4.1 If the meter has not been removed, applicant may make request for service resumption to the Customer Service Division, First Floor, 1136 Washington Street, Columbia, S.C. Payment of all back service charges and a fee as specified in Section 5-4002 of the City Code of Ordinances for turning on water is required prior to resumption of service.

12.4.2 If the meter has been removed, applicant may make request for service resumption to the Water Customer Service Division, First Floor, 1136 Washington Street, Columbia, S.C. A determination will be made at that time to reinstate the service or treat the request as a new service. If the service is to be reinstated, payment of all back service charges and a fee as specified in Section 23-62 and 23-144 of the City Code of Ordinances for replacing the meter shall be made prior to resumption of service.

12.5 FIRE PROTECTION SYSTEMS

12.5.1 When the application for service is for a private fire protection system, the pertinent portions of the requirements stated above shall apply. Fees for fire protection system meters are specified in Section 23-147. Installation shall be by a city approved contractor hired by the owner at the owner's expense. A list of approved contractors shall be provided by the Utilities and Engineering Department prior to the purchase and installation of a water meter to serve a fire protection sprinkler system. Installation including service and connection, must be coordinated with the City of Columbia inspector and approved prior to operation.

12.6 LONG LINE SERVICE

12.6.1 In some instances water service is not available to the property, but service can be provided by a service line across adjoining property. The City does not recommend such service and cannot accept any responsibility for service beyond the meter. No long line service will be approved which is longer than 1,500 lineal feet. When the property owner so requests, this type service will be reviewed by the Director of Utilities and Engineering or City Engineer and may be approved subject to the following conditions:

12.6.1.1 The property to be served is single family residential only. This type service cannot be approved for commercial or other uses.

12.6.1.2 The property owner shall accept in writing, all responsibility for the level of service beyond the meter.

12.6.1.3 The property owner must acquire any easements required, size, install and maintain the service line from the meter to his residence.

12.6.1.4 Only one residence can be connected to each meter.

12.6.2 The Property Owner Shall Sign an Acknowledgement as Shown on the Attached Sample.

DATE

Re: Water Service Availability; Property Shown on [County Tax Map Sheet #[

OWNER'S NAME
ADDRESS

Dear [:

This is in response to your request for water service availability to the referenced property.

Water service is not presently available to your property. However, your request to have a water meter installed from the City's existing [" water main within an easement along [is approved provided it is understood and agreed that:

a. Water service is for residential use only.

b. The City cannot accept any responsibility for the level of service past the meter.

c. You will retain responsibility for proper sizing, installation, operation and maintenance of the service line from the water meter to your residence.

d. You will be responsible for obtaining easements required for installation of your service line. **A copy of the recorded easement(s) must be presented at the time of application and payment for water service.**

e. No more than one residence may be connected to each meter or service line.

f. Service to properties contiguous to the City limits shall not be provided until a Declaration of Covenant for contiguous property, in such form as approved by the City of Columbia Legal Department, has been filed for all contiguous property of the owner in the area and has been properly executed for public recording. Service to property outside the City limits which is not contiguous shall not be provided until a Declaration of Covenant, in such form as shall not be provided until a Declaration of Covenant, in such form as approved by the City of Columbia Legal Department, has been properly executed for public recording. The Declaration of Covenant must include, as an exhibit, **a current copy of the recorded deed** for the property and shall run with the land. Water service to all properties outside of the corporate limits of Columbia is provided subject to approval by Columbia City Council and such rules, regulations and policies as City Council may from time to time establish or amend. Please contact Special Services at 803-545-3400 for more information regarding the Declaration of Covenant.

g. A **recorded deed** of the property to be served must be provided **prior to** the property owner's application for the water meter.

h. A fire service charge will be included in your monthly water bill. Adequate fire protection may not presently be available to serve this property.

If you desire to proceed on the basis stated above, please indicate your agreement by your signature below and return the original to this office for file. The duplicate is for your file.

The meter will be installed after application and payment of appropriate fees.

Yours very truly,

Engineering Technician III, Supervisor

Date Property Owner'Signature_____

12.7 CROSS CONNECTION CONTROL/BACKFLOW PREVENTION

12.7.1 Each consumer connection to the City's water system is required to be protected by a backflow prevention device appropriate for the proposed use. See Section 23-144 and 23-145 of the City of Columbia code of Ordinances. Dual check valve devices 1" in diameter and smaller are installed by City Forces at the time of meter installation. Appropriate fees are assessed and collected at the time of application for service. All other devices must be purchased and installed by the person requesting service. Installation must be made by a plumber certified to install and test such devices.

12.7.1.1 The Cross Connection Control Section, Water Maintenance Division, will determine the degree of hazard and the device appropriate for each specific application. Any question or controversy not resolved by the general guidelines herein will be referred to the Cross Connection Control Section for resolution. Call 803-545-3923.

12.7.1.2 Definition of Terms. The devices referred to herein are:

12.7.1.2.1 The reduced pressure type is a reduced pressure backflow preventer which is used in applications that have the potential to present a high degree of hazard to the public health. These devices must be installed in a water-free vault or above ground. They must be inspected and certified annually.

12.7.1.2.2 The double check valve assembly (D.C.V.A.) consists of two single check valves housed in separate bodies, mounted in tandem with a gate valve on each end. These units are used for lesser hazards that involve potential contamination, but no hazard to the public health. They must be inspected and certified annually.

12.7.1.2.3 The dual check valve device consists of two check valves housed in a single body. It is installed in line on the building side of the meter. It is used in relatively low hazard applications, such as private residences.

12.7.2 Backflow prevention devices usually appropriate for the various uses are shown below.

12.7.2.1 RESIDENTIAL DEVICES
Domestic use, dual check valve device in sized ¾", 1", 1 ½" and 2"
Irrigation use, D.C.V.A. double-type device in sizes 1 ½" and 2"

12.7.2.2 COMMERCIAL IRRIGATION
All sizes to be D.C.V.A. double-type device

12.7.2.3 INTERCONNECTIONS BETWEEN WATER SYSTEMS
In the event there is a second source of water serving the property, it must be physically separate from the system served by City water, or the property owner must protect the safety of the City's water system by the installation of a double check valve assembly backflow preventer on the building side of the water meter. A reduced pressure backflow preventer may be required in certain applications as determined by the Cross Connection Control Section.

12.8 MAIN LINE WATER TAPS

12.8.1 The cost for the installation of main lines taps as established by the City Engineer shall include all materials, labor, equipment and road repair required for the installation of a tapping sleeve, valve and box. This cost also includes extending the water main to the edge of the road right-of-way when the existing water main is located within the same right-of-way or within an easement contiguous to the road right-of-way. In the event that the existing water main is within an easement not contiguous to the road right-of-way, the main will be extended to the edge of that easement. The City Engineer reserves the right to amend this practice upon review of construction plans.

INSTRUCTIONS FOR EXECUTION OF SPECIAL POWER OF ATTORNEY FORM

- The **property owner(s)** must sign the instrument for it to be valid in the presence of two (2) witnesses.
- The **property owner(s)** sign(s) on the signature line(s) to the right of the page.
- The **witnesses** sign on the signature lines to the left of the page.
- The **second witness** can also be a **Notary Public** for your state.
- The **Notary Public** should sign his/her name where designated; insert the State and County where the document is executed; fill in the date his/her commission expires; and affix his/her seal if the document is executed outside of the State of South Carolina.

BRING THE ORIGINAL SIGNED SPECIAL POWER OF ATTORNEY FORM INTO OUR OFFICE WHEN APPLYING/PAYING FOR METER/TAP INSTALLATION FEES.

BRING A COPY OF THE **RECORDED** DEED IF THIS PROPERTY IS OUTSIDE OF THE CITY OF COLUMBIA'S CITY LIMITS. YOU MAY OBTAIN A COPY OF THE RECORDED DEED AT THE COUNTY COURTHOUSE (where the property is located).

THIS INSTRUMENT WILL NEED TO BE RECORDED AT THE COURTHOUSE IN THE COUNTY WHERE THE OWNER RESIDES.

If you are unclear on these instructions, please call our office at 803-545-3400 and ask for Special Services.

PLEASE MAKE SURE THAT THE NAME(S) OF THE OWNER(S) OR BUSINESS(ES) LISTED ON THE DEED MATCHES UP WITH THE NAME(S) OF THE OWNER(S) OR BUSINESS(ES) ON THE SPECIAL POWER OF ATTORNEY, AS WELL AS WHO IS SIGNING THE DOCUMENT AND THEIR TITLE.

STATE OF SOUTH CAROLINA)
)
COUNTY OF _____)

SPECIAL POWER OF ATTORNEY

KNOW ALL MEN BY THESE PRESENTS THAT _____,

being the owner of property identified as lot _____, block _____, on Sheet _____,

of Tax Maps of the County of _____, State of South Carolina, last

revised _____, has/have made, constituted and appointed and by these presents

do make, constitute and appoint _____,

whose mailing address is _____,

my true and lawful attorney for me and in my name, place and stead, and for my use

and benefit, as my act and deed, to do and execute or to concur with persons jointly

interested with myself therein in the doing or executing of, all or nay of the following

acts, deeds, and things, that is to say: _____, (PROPERTY

OWNER) _____ (TITLE) gives him/her all necessary

authority to apply to the City of Columbia for the installation of a water meter and/or

sanitary sewer connection to serve my property at _____

_____,
(PROPERTY ADDRESS)

And to execute and deliver all necessary contracts and instruments to secure such service, including but not limited to, the execution of an agreement, contract and/or Declaration of Covenant. And giving unto the said attorney in fact full authority and power to do and perform any and all other acts necessary or incident to the performance and execution of the powers herein granted with the power to do and perform all acts authorized hereby as full to all intents and purposes as the grantor might or could if personally present.

Unless sooner revoked, the power herein shall expire at midnight on the _____

day of _____, _____.

IN WITNESS WHEREOF, _____ (owner)

has hereunto set his/her/its hand and seal this ____ day of _____, _____.

WITNESS:

_____ _____
(WITNESS #1 SIGNATURE) (OWNER'S SIGNATURE AND TITLE)

_____ _____

(WITNESS #2 SIGNATURE) (OWNER'S SIGNATURE AND TITLE)

STATE OF _____)

ACKNOWLEDGEMENT

COUNTY OF _____)

The foregoing instrument was acknowledge before me this ____day of _____,

_____ by the within-named Grantor(s).

_____

(NOTARY PUBLIC)

NOTARY PUBLIC FOR _____

(STATE)

MY COMMISSION EXPIRES _____

PART 13: SPECIFICATION FOR APPLICATION FOR SANITARY SEWER SERVICE
TABLE OF CONTENTS

Paragraph	Description	Page No.
13.1	How to Apply	13-1
13.2	Agencies Assigning Street Numbers	13-1
13.3	Required Verification	13-1
13.4	Service Connection Within SCDHPT Right-of-way	13-1
13.5	Emergency Permit Procedures (SCDHPT)	13-2
13.6	Sewer Tapping Fees	13-2
13.7	Sewage Treatment Plant Expansion Fees	13-3
13.8	Availability of Sanitary Sewer Service	13-3
13.9	Sewage Pumping Station Surcharge	13-3

CITY OF COLUMBIA REGULATIONS
PART 13
APPLICATION FOR SANITARY SEWER SERVICE

13.1 HOW TO APPLY: Application for sanitary sewer service involves a contractual arrangement that requires the signature of the property owner or his legally appointed representative. See attached special power of attorney form. Application must be made at the Department of Utilities and Engineering, seventh floor, 1136 Washington Street, Columbia, SC. The applicant must provide the street and number where service is desired.

13.2 AGENCIES ASSIGNING STREET NUMBERS: The agencies assigning street numbers are:

13.2.1 Inside the Columbia City Limits: Department of Utilities and Engineering, seventh floor, 1136 Washington Street, Columbia, South Carolina.

13.2.2 Richland County: Planning Dept., 2020 Hampton St., Columbia, South Carolina.

13.2.3 Lexington County: Planning and GIS Dept., 212 Southlake Road, Lexington, South Carolina.

13.3 REQUIRED VERIFICATION:A department staff member verifies the following:

13.3.1 That service is available and the system has the capacity to accept the additional loading.

13.3.2 That location to be served is inside/outside the City. If outside but contiguous to City Limits, then applicant is informed that the property owner must petition to be annexed or execute a Declaration of Covenant for contiguous property prior to being served.

13.3.3 That location of service will be within a private easement; City street, Department of Transportation right-of-way or County road. This is done to determine what type permit is required.

13.3.4 That if the service is for a residence, is it served by a sewage pump station meeting the criteria stated in Section 13.8? If yes, the work order and any other necessary records shall be properly annotated to insure the surcharge is billed.

13.4 SERVICE CONNECTION WITHIN SCDHPT RIGHT-OF-WAY: If the location for service connection is within a South Carolina Department of Transportation right-of-way, there will be a delay in making the tap. The Department of Utilities and Engineering must prepare and forward to the South Carolina Department of Transportation an application for permission to work within the Department of Transportation right-of-way. Under normal conditions, the permit is received form the South Carolina Department of Transportation within two or four weeks. There are similar requirements for rights-of-way under the jurisdiction of Richland County or Lexington County.

13.5 EMERGENCY PERMIT PROCEDURE (SOUTH CAROLINA DEPARTMENT OF TRANSPORTATION

13.5.1 If an applicant states that the connection is needed immediately and is an emergency, the Department of Utilities and Engineering will prepare, as quickly as possible, the application and sketch required by the South Carolina Department of Transportation. The city will then allow the applicant to deliver the application and sketch to the office of the Maintenance Engineer, South Carolina Department of Transportation. The Maintenance Engineer will prepare a permit granting the Department of Utilities and Engineering permission for City forces to make the sewer tap.

13.6 SEWER TAPPING FEES - See current City Code Section 23-148.

Sec. 23-148. Sewer tapping fees.

(a) Tapping charges for sewer connections shall be:

(1) Taps installed by developer/owner: $300 for each tap.

(2) Taps installed by city forces: $1,300 for each tap.

(b) Taps are required as follows:

(1) Single-family residence: One tap.

(2) Single-family mobile home: One tap.

(3) Multifamily unit: One tap per dwelling unit.

(4) Separate laundry facilities on the same premises restricted to use by residents of the multifamily units only: One tap for every two washing machines using not more than 40 gallons per wash cycle. Larger machines shall require one tap each.

(5) Hotels and motels: One tap plus one-half tap per room.

(6) Day school: One tap for each 20 students and staff (average daily attendance).

(7) Institutions (except nursing homes and hospitals) having sleeping facilities (i.e., penitentiary, reformatory, boarding school, full-time care facility): One tap for each four beds.

(8) Contaminated groundwater: One tap for each 400 gallons, or portion thereof, or estimated average input per day into the sewer system.

(9) All others: The number of taps shall be computed by the city engineer in accordance with the criteria of the state board of health on the basis of one tap for each 400 gallons, or portion thereof, of estimated average input per day into the sewer system.

(Code 1979, § 5-4004; Ord. No. 97-57, 9-17-97; Ord. No. 2006-049, 11-15-06)

13.7 SEWAGE TREATMENT PLANT EXPANSION FEES – In addition to the sewer tapping fees enumerated above, Section 23-152 of the Code of Ordinance establishes a sewage treatment plant expansion fee. This fee must be paid at the time application for service is made, or an extended payment plan agreement must be executed.

Sec. 23-152. Sewer plant expansion fee.

(a) *Amount.* In addition to those fees established and required by section 23-148, a sewer plant expansion fee shall be required to be paid prior to each sewer service connection to offset the cost of constructing increased treatment plant and collection system capacity or capital expenditures to retain current system capacity in accordance with the capital improvements plan of the City of Columbia. The costs of construction or expenditures to retain current system capacity shall include design and engineering costs, materials, labor and debt service on any bonds which may be issued to provide the intended plant capacity increase. The amount of the expansion fee for each connection shall be computed by multiplying the number of taps required for each application in accordance with section 23-148 times $1,320.00 from July 1, 2007 until December 31, 2007 and times $2,640.00 thereafter.

(b) *Extended payment.* At the time of application for the sewer service connection, applicant may elect to pay the entire fee in full or pay the fee, or any portion thereof, in forty-eight (48) equal monthly installments with interest thereon at the rate of seven and one-half (7.5%) percent per annum. The monthly payments for the plant expansion fee shall be added to and collected with the monthlysewer bill for the property to be served commencing with the first sewer bill, and shall be collectible in the same manner as any other sewer charges by the City of Columbia. In the event of the sale of the property being served by the sewer connection, the unpaid portion of the fee subject to extended payment in accordance with this section shall be immediately due and payable unless Purchaser(s) assume the extended payment obligation at closing. Until Purchaser(s) apply for transfer of sewer service and/or assume or pay in full the unpaid extended payment, no further sewer service shall be provided to such property.

(Code 1979, §§ 5-4009, 5-4010; Ord. No. 2006-050, 11-15-06; Ord. No. 2006-108, 5-16-07)

13.8 AVAILABILITY OF SANITARY SEWER SERVICE – In order to be available to provide SERVICE, the sanitary sewer main must be located within the boundary of the property to be served, or within the right-of-way of a road or street adjoining the property. Sanitary sewer service lines that must cross intervening private property to reach the sanitary sewer main shall not be approved. All sanitary sewer service lines are subject to the plumbing code of the City or County having jurisdiction as to material, size, depth of lay and length.

13.9 SEWAGE PUMPING STATION SURCHARGE – In addition to the Sanitary Sewer Service charges, a surcharge of $8.00 per month for residences served by small sewage pump stations. A small pump station is defined as one which serves

50 or fewer residences. When the number of residences actually served by a pump station exceeds 50, the surcharge shall be removed from the billings for residences served by that particular station. The surcharge shall apply only to sewage pump stations accepted by the City for operation and maintenance on or after March 1, 1992.

Unit Contributory Loadings to All Domestic Wastewater Treatment Facilities	
Type of Establishment	Hydraulic Loading (GPD)
A. AIRPORT:	
1.Per Employee	8
2.Per Passenger	4
B. APARTMENTS, CONDOMINIMUMS, PATIO HOMES:	
1.Three (3) Bedrooms (Per Unit)	300
2.Two (2) Bedrooms (Per Unit)	225
3.One (1) Bedroom (Per Unit)	150
C. ASSEMBLY HALLS: (Per Seat)	4
D. BARBER SHOP:	
1.Per Employee	8
2.Per Chair	75
E. BARS, TAVERNS:	
1.Per Employee	8
2.Per Seat, Excluding Restaurant	30
F. BEAUTY SHOP:	
1.Per Employee	8
2.Per Chair	94
G. BOARDING HOUSE, DORMITORY: (Per Resident)	38
H. BOWLING ALLEY:	
1.Per Employee	8
2.Per Lane, No Restaurant, Bar or Lounge	94
I. CAMPS:	
1.Resort, Luxury (Per Person)	75
2.Summer (Per Person)	38
3.Day, with Central Bathhouse (Per Person)	26
4.Travel Trailer (Per Site)	131
J. CAR WASH: (Per Cash Washed)	56
K. CHURCHES: (Per Seat)	2
L. CLINICS, DOCTOR'S OFFICE:	
1.Per Employee	11
2.Per Patient	4
M. COUNTRY CLUB, FITNESS CENTER, SPA: (Per Member)	38
N. DENTIST OFFICE:	
1.Per Employee	11
2.Per Chair	6
3.Per Suction Unit; Standard Unit	278
4.Per Suction Unit; Recycling Unit	71
5.Per Suction Unit; Air Generated Unit	0
O. FACTORIES, INDUSTRIES:	
1.Per Employee	19
2.Per Employee, with Showers	26
3.Per Employee, with Kitchen	30
4.Per Employee, with Showers and Kitchen	34
P. FAIRGROUNDS: (Average Attendance, Per Person)	4

61-67, Appendix A. Unit Contributory Loadings to All Domestic Wastewater Treatment Facilities.

Q. GROCERY STORES: (Per Person, No Restaurant or Food Preparation)	19
R. HOSPITALS:	
1.Per Resident Staff	75
2.Per Bed	150
S. HOTELS: (Per Bedroom, No Restaurant)	75
T. INSTITUTIONS: (Per Resident)	75
U. Laundries: (Self Service, Per Machine)	300
V. MARINAS: (Per Slip)	23
W. MOBILE HOMES: (Per Unit)	225
X. MOTELS: (Per Unit, No Restaurant)	75
Y. NURSING HOMES:	
1.Per Bed	75
2.Per Bed, with Laundry	113
Z. OFFICE, SMALL STORES, BUSINESS, ADMINISTRATION BUILDINGS: (Per Person, No Restaurant)	19
AA. PICNIC PARKS: (Average Attendance, Per Person)	8
BB. PRISON/JAIL:	
1.Per Employee	11
2.Per Inmate	94
CC. RESIDENCES: (Per House, Unit)	300
DD. REST AREAS, WELCOME CENTERS:	
1.Per Person	4
2.Per Person, with Showers	8
EE. REST HOMES:	
1.Per Bed	75
2.Per Bed, with Laundry	113
FF. RESTAURANTS:	
1. Fast Food Type, Not Twenty Four (24) Hours (Per Seats)	30
2.Twenty Four (24) Hour Restaurant (Per Seat)	53
3.Drive-In (Per Car Served)	30
4.Vending Machine, Walk-up Deli (Per Person)	30
GG. SCHOOLS, DAY CARE:	
1.Per Person	8
2.Per Person, with Cafeteria	11
3.Per Person, with Cafeteria, Gym and Showers	15
HH. SERVICE STATIONS:	
1.Per Employee	8
2.Per Car Served	8
3.Car Wash (Per Car Washed)	56
II. SHOPPING CENTERS, LARGE DEPARTMENT STORES, MALLS: (Per Person, No Restaurant)	19
JJ. STADIUMS, COLISEUMS: (Per Seat, No Restaurant)	4
KK. SWIMMING POOLS: (Per Person, with Sewer Facilities and Showers)	8
LL. THEATERS: Indoor (Per Seat), Drive In (Per Stall)	4

61-67, Appendix A. Unit Contributory Loadings to All Domestic Wastewater Treatment Facilities.

PART 14: INSTRUCTIONS TO BIDDERS
TABLE OF CONTENTS

Paragraph	Description	Page No.
14.1	Receipt and Opening of Bids	14-1
14.2	Preparation of Bid	14-1
14.3	Addenda and Interpretations	14-2
14.4	Time for Receiving Bids	14-3
14.5	Withdrawal of Bids	14-3
14.6	Bidders Present	14-3
14.7	Telegraphic Modification	14-3
14.8	Qualifications of Bidder	14-3
14.9	Business License	14-3
14.10	Bid Security	14-4
14.11	Liquidated Damages for Failure to Enter Into Contract	14-4
14.12	Time of Completion and Liquidated Damages	14-4
14.13	Conditions of Work	14-5
14.14	Subsurface Exploration	14-5
14.15	Specifications and Schedules	14-5
14.16	Time of Performance	14-6
14.17	Samples	14-6
14.18	Withholding for Nonresidents	14-6
14.19	Security for Faithful Performance	14-7
14.20	Insurance	14-7
14.21	Accident Prevention	14-9
14.22	Power of Attorney	14-9
14.23	Notice of Special Conditions	14-9
14.24	Laws and Regulations	14-9
14.25	Method of Award – Lowest Responsible Bidder	14-10
14.26	Signature to Bids	14-10
14.27	Bids for All or Part	14-10
14.28	Construction Schedule and Periodic Estimates	14-10
14.29	Payment	14-11
14.30	Special Notice to Bidders on Contracts Over $1,000,000.00	14-11
14.31	Indemnification	14-12
14.32	Subcontracting Outreach Program	14-12
14.33	Mentor-Protégé Program	14-13
14.34	Proposal Bid for Unit Price Contracts	14-14
14.35	Proposal Bid for Stipulated Sum Contracts	14-15
14.36	Bid Bond	14-17
14.37	Equal Employment Opportunity	14-19
14.38	Subcontracting Outreach Program Agreement	14-21
14.39	Business Information Records	14-22
14.40	Subcontracting Outreach Program Documentation Form	14-23
14.41	Contract Form	14-24
14.42	Notice To Proceed Form	14-26
14.43	Performance-Payment Bond	14-27
14.44	AIA Document A201, 1997	14-29
14.45	Subcontracting Outreach Program Policies and Procedures	14-41

CITY OF COLUMBIA REGULATIONS
PART 14
INSTRUCTIONS TO BIDDERS

14.1 RECEIPT AND OPENING OF BIDS

14.1.1 The Mayor and City Council of The City of Columbia, S.C. (herein called the "Owner"), invite bids on the forms included in the Bidding Documents, all blanks of which must be appropriately filled in. BID #XXX-XX-XX-XXX will be received electronically via Bid Online until 2:00 o'clock P.M. EST, XXXXXX, 20XX , and then at said office publicly opened and read aloud.

14.1.2 The Owner may consider informal any bid not prepared and submitted in accordance with the provisions hereof and may waive any informalities or reject any or all bids. Any bid may be withdrawn prior to the above scheduled time for the opening of bids or authorized postponement thereof. Any bid received after the time and date specified shall not be considered. No bidder may withdraw a bid within sixty (60) days after actual date of the opening thereof.

14.1.3 At the time of the opening of bids, each Bidder will be presumed to have inspected the site and to have read and be thoroughly familiar with the Plans and Contract Documents (including all Addenda). The failure or omission of any Bidder to examine any form, instrument, or document shall in no way relieve any Bidder from any obligation in respect to his bid.

14.1.4 SALES TAX AND/OR USE TAX - Bidders shall include in amounts bid payment of State Sales Tax and/or Use Tax on all taxable materials specified to be furnished by the Contractor and incorporated into the work under this contract.

14.2 PREPARATION OF BID

14.2.1 Each bid must be submitted on the prescribed form and shall be accompanied by a properly completed Compliance Statement with regard to Executive Order 11246. All bids must be based on the predetermined wage scale set forth by the U. S. Department of Labor where such wage scales are applicable. All blank spaces for bid prices must be filled in, in ink or typewritten, and the foregoing Compliance Statement must be fully completed and executed when submitted. The Contractor shall not remove and submit the PROPOSAL pages separate from the volume of contract documents, but shall submit his proposal bound with the completed volume of documents, including all pages correctly assembled.

14.2.2 Each bidder, whether a resident or nonresident of this State and whether a license has been issued to him or not, is required to show evidence of being licensed before his bid for this project is opened or considered by affixing the bidder's South Carolina Contractor's license number on the outside of the sealed bid envelope. If such information is not provided, the bid will not be opened or considered by the owner.

14.2.2.1 All bidders must fully comply with S.C.Code Ann Section 40-11-5, et.seq. (CumSup. 1998).

14.2.3 Bids which are incomplete, unbalanced, conditional, or obscure, or which contain additions not called for, erasures, alterations, or irregularities of any kind, or which do not comply with the Instructions to Bidders may be rejected at the option of the Owner.

14.2.4 The correct total amount bid for the complete work is defined as the correct sum total of the amounts bid for the individual items in the Proposal. The correct amount bid for each unit price item is defined as the correct product of the quantity listed for the item times the unit bid price. In case of error in the extension of prices, the UNIT PRICE will govern. Erasures or other changes in the bids must be explained or noted over the signature of the bidder.

14.2.5 Bidders or their authorized agents are expected to examine the site, the maps, drawings, specifications, circulars, schedule and other instructions pertaining to the work, which will be open to their inspection. Failure to do so will be at the bidder's own risk, and he cannot secure relief on the plea of error in the bid.

14.2.6 If more than one bid be offered by any one party, by or in the name of his or their clerk, partner, or other person, all such bids may be rejected. This shall not prevent a bidder from submitting alternative bids when called for. A party who has quoted prices on materials to a bidder is not thereby disqualified from quoting prices to other bidders or from submitting a bid directly for the materials or work.

14.2.7 Each bid shall be accompanied by a bid bond <u>using the form contained in the contract (BID BOND pages 1 and 2) and</u> executed by a bonding company duly authorized and licensed to do business in the State of South Carolina, or by a certified check payable to the order of The City of Columbia, and drawn upon a national bank or a bank and trust company doing business in the State of South Carolina, in an amount equal to five (5) percent of the amount of the bid, as evidence of good faith by the bidder. The deposits of the three lowest bidders will be held until the successful bidder has entered into a contract and furnished bond, or all bids have been rejected. <u>FAILURE TO USE THE BID BOND FORM CONTAINED IN THE BID PROPOSAL FORMS (BID BOND, PAGES 1 & 2), WITHOUT MODIFICATION, WILL RESULT IN REJECTION OF THE BID</u>.

14.3 <u>ADDENDA AND INTERPRETATIONS</u>

14.3.1 If any person contemplating submitting a bid for the proposed contract is in doubt as to the true meaning of any part of the plans, specifications, or other proposed contract documents, he may submit to the City Engineer a written request for an interpretation thereof. The persons submitting the request will be responsible for its prompt delivery. Any interpretation of the proposed documents will be made only by addendum duly issued and a copy of such addendum will be mailed or delivered to each person receiving a set of such documents. The City Engineer will not be responsible for any other explanation or interpretations of the proposed documents.

14.3.2 The estimated quantities contained in the proposal are for the purpose of comparing bids. These quantities are not guaranteed and payment will be made on the basis of the work as actually executed at the unit price in the proposal as accepted.

14.4 TIME FOR RECEIVING BIDS - Bids received prior to the time of opening will be securely kept, unopened. The official whose duty it is to open them will decide when the specified time has arrived and no bid received thereafter will be considered. No responsibility will be attached to the owner for the premature opening of a bid not properly addressed and identified. Unless specifically authorized, telegraphic bids will not be considered.

14.5 WITHDRAWAL OF BIDS - Bids may be withdrawn on written or telegraphic request received from bidders prior to the time fixed for opening. Negligence on the part of the bidder in preparing the bid confers no right for the withdrawal of the bid after it has been opened.

14.6 BIDDERS PRESENT - At the time fixed for the opening of bids, their contents will be made public for the information of bidders and others properly interested, who may be present either in person or by representative.

14.7 TELEGRAPHIC MODIFICATION - Any bidder may modify his bid by telegraphic communication at any time prior to the scheduled closing time for receipt of bids, provided such telegraphic communication is received by the Owner prior to the closing, and provided further the Owner is satisfied that a written confirmation of the telegraphic modification over the signature of the bidder was mailed prior to the closing time. The telegraphic communication should not reveal the bid price but should provide the addition and subtraction or other modification so that the final prices or terms will not be known by the Owner until the sealed bid is opened. If written confirmation is not received within two days from the closing time, consideration may not be given to the telegraphic modification, unless it is to the best interest of the City.

14.8 QUALIFICATIONS OF BIDDER

14.8.1 The owner may make such investigations as he deems necessary to determine the ability of the bidder to perform the work, and the bidder shall furnish to the owner all such information and data for this purpose as the Owner may request.

14.8.2 The Owner reserves the right to reject any bid if the evidence, submitted by, or investigation of, such bidder fails to satisfy the Owner that such bidder is properly qualified to carry out the obligations of the contract and to complete the work contemplated therein.

14.9 BUSINESS LICENSE

14.9.1 Every contractor *** maintaining an office or offices or place of business in the City of Columbia, who for a fixed price, commission, fee or wage, or other consideration, undertakes to construct or supervise the construction, alteration, or repair of any building or to provide any type of contractual services whatsoever shall pay a license fee as follows on his gross contract business done inside and outside of the City of Columbia:

14.9.1.1 On gross contract business not exceeding $25,000 ..... $60.50

14.9.1.2 On each additional $1,000 or fraction thereof of gross contract business physically performed within the City of Columbia 90

14.9.1.3 On each additional $1,000 or fraction thereof of gross contract business physically performed outside the City of Columbia on which a license fee has not been paid to a city or town 12

14.9.2 Every contractor *** who does not maintain an office or place of business in the City of Columbia, but who, for a fixed price, commission, fee or wage, or other consideration undertakes to construct or supervise the construction, alteration, or repair of any building or to provide any type of contractual services whatsoever, shall pay a license fee as follows on his gross business performed within the corporate limits of the City of Columbia:

14.9.2.1 On gross contract business not exceeding $25,000 ..... $90.75

14.9.2.2 On each additional $1,000 or fraction thereof gross contract business .. 1.80

14.9.3 The total license fee for the full amount of the contract(s) shall be paid to the City before any part of the contract(s) is executed. The license that is issued will permit the contractor to complete the job(s) for which the original license was issued even though the work is continued after the thirty-first day of December of any year.

14.10 BID SECURITY - Each bid must be accompanied by a certified check or by a bid bond using the form contained in the contract (BID BOND pages 1 and 2) for an amount equal to at least five (5) percent of the amount of the bid, to guarantee that the successful bidder will, within ten (10) days from the date of the notice of award of contract, enter into a contract with the Owner, and execute to said Owner a performance and payment bond, the said contract and bond to be in the form set forth in the contract, bond and specifications referred to in the Advertisement for Bids. If for any reason whatever, the Bidder withdraws from the competition after opening of the bids, or refuses to execute the required contract and performance and payment bond, if his bid is accepted, the Owner may retain the amount of the certified check, or proceed on the bid bond.

Such checks or bid bonds will be returned to all except the three lowest bidders within one week after the opening of bids, and the remaining checks or bid bonds will be returned promptly after the Owner and the successful bidder have executed the contract. FAILURE TO USE THE BID BOND FORM CONTAINED IN THE BID PROPOSAL FORMS (BID BOND, PAGES 1 & 2), WITHOUT MODIFICATION, WILL RESULT IN REJECTION OF THE BID.

14.11 LIQUIDATED DAMAGES FOR FAILURE TO ENTER INTO CONTRACT - The successful bidder, upon his failure or refusal to execute and deliver the contract and bonds required within ten (10) days after he has received notice of the acceptance of his bid, shall forfeit to the Owner, as liquidated damages, for such failure or refusal the security deposited with his bid.

14.12 TIME OF COMPLETION AND LIQUIDATED DAMAGES - Bidder must agree to commence work on or before a date to be specified in a written "Notice to

Proceed" from the Owner and to fully complete the project within the number of consecutive calendar days thereafter as indicated on the Bid Form. Bidder must agree to pay as liquidated damages the sum indicated in the Contract Documents for each consecutive day thereafter that the work remains incomplete, as hereinafter provided in General Specifications. Signing of the proposal form signifies such agreement.

14.13 CONDITIONS OF WORK

14.13.1 Each bidder must inform himself fully of the conditions relating to the construction of the project and the employment of labor thereon. Failure to do so will not relieve a successful bidder of his obligation to furnish all material and labor necessary to carry out the provisions of his contract. Insofar as possible, the Contractor, in carrying out his work, must employ such methods or means as will not cause any interruption of or interference with the work of any other Contractor or utility company. All information given on the drawings or in the contract documents relating to subsurface conditions, existing pipes, and other structures is from the best sources at present available to the Owners. All such information is furnished only for the information and convenience of the Contractor. It is agreed and understood that the Owners do not warrant or guarantee that the conditions, pipes, or other structures encountered during construction will be the same as those indicated on the drawings or in the contract documents.

14.13.2 The Owner will not furnish any labor, material or supplies unless specifically provided for in the contract.

14.14 SUBSURFACE EXPLORATION - All information available to the Owner, if any, on subsurface conditions will be made available for examination by prospective bidders. However, it is understood and agreed that the Owner shall in no way be held responsible for interpretation of this information, its accuracy or its thoroughness. Prospective bidders shall make any subsurface explorations they believe necessary to verify and supplement information received from the Owner.

14.15 SPECIFICATIONS AND SCHEDULES

14.15.1 The specifications, special provisions, schedules and drawings which form the basis of any bid will be considered as part thereof and will form a part of the contract. Copies of these papers, together with a copy of Standard Contract Form, including authorized additions or deletions, if any, will be furnished to or made available for the inspection of bidders by the office indicated in the published "Advertisement for Bids."

14.15.2 It is the intent of the plans and specifications that one shall supplement the other, but not necessarily duplicate one another. Any work called for in one and omitted in the other shall be executed as if called for in both in order that the work under the contract be fully completed according to the complete design as determined and decided by the Engineer.

14.15.3 In case of discrepancies in the plans, calculated dimensions shall govern. The plans shall govern where omissions occur in the Specifications as to items of equipment, materials or quantities. It shall be the responsibility of the Bidder to call to the attention of the Engineer obvious omissions of such magnitude as to affect the strength, adequacy, function, operation, completeness, or cost of any part of the work in ample time for amendment by Addendum prior to the opening date.

14.16 TIME OF PERFORMANCE - When not otherwise specified, the bidder must state the least number of calendar days (Counting Sundays and Holidays) after date of receipt of "Notice to Proceed" in which he will commence performance, and the number of calendar days after the date of receipt of "Notice to Proceed" in which he will complete the work. In stating time the bidder should make due allowances for difficulties which may be encountered. The bidder shall not be excused because of difficulties, whether of weather or other factors, whether anticipated or not, unless by formal written suspension of the work by the City Engineer.

14.17 SAMPLES - When samples are required, they must be submitted by the Bidder so as to reach the office designated prior to the hour set for opening the bids. Samples shall be furnished free of expense to the Owner, properly marked for identification, and accompanied by a list when there is more than one sample. The Owner reserves the right to mutilate or destroy any sample submitted whenever it may be considered necessary to do so for the purpose of testing. Samples not so mutilated or destroyed when no longer required to be retained in connection with the award or delivery of supplies, will be returned at the Bidder's expense, if such return is requested in the bid.

14.18 WITHHOLDING FOR NONRESIDENTS

14.18.1 The attention of Contractors is called to Part 2, Act No. 855, ACTS OF THE GENERAL ASSEMBLY OF SOUTH CAROLINA for 1958, entitled "WITHHOLDING FOR NON-RESIDENTS" which provides in part that "Any municipality ********** hiring or contracting or having a contract with any nonresident taxpayer conducting a business of temporary nature carried on within this State, where such contract exceeds ten thousand ($10,000) dollars or could reasonably be expected to exceed ten thousand ($10,000) dollars, shall withhold two (2) percent of each and every payment made to such non-residents.

14.18.2 The conditions set forth in subsection A (2) may be waived by the South Carolina Tax Commission, provided the payee shall assure the Tax Commission by bond, secured by an insurance company licensed by the South Carolina Insurance Commission, or deposit of securities subject to approval by the State Treasurer, or cash which shall bear interest, that the Payee will comply with all applicable provisions of the Income Tax Act of 1926, as amended, and with the withholding requirements insofar as his obligations as a withholding agent is concerned." Proof of such coverage shall be filed with the Engineer before work is started.

14.18.3 If the Contractor fails to comply with the requirements of the South Carolina Tax Commission, two percent (2%) of each and every payment made to the Contractor shall be retained by the City to satisfy such requirements.

14.19 SECURITY FOR FAITHFUL PERFORMANCE

14.19.1 Simultaneously with his delivery of the executed contract, the Contractor shall furnish a surety bond or bonds in an amount at least equal to one hundred (100) percent of the amount of the contract price as security for the faithful performance of this contract and for payment of all persons performing labor on the project under this contract and furnishing materials in connection with this contract as specified in General Specifications included herein. The surety bond, must be issued by a surety company licensed in the State of South Carolina with an “A” minimum rating of performance as stated in the most current publication of Best Key Rating Guide, Property Liability. Each Bond shall be accompanied by a "Power of Attorney" authorizing the attorney-in-fact to bind the surety and certified to include the date of the Bond. Said surety shall be subject to approval by the Owner's attorney.

14.19.2 The Owner reserves the right to accept or reject the qualifications of any bonding company submitted by the Contractor.

14.20 INSURANCE

14.20.1 The Contractor shall procure and shall maintain during the life of this contract, whether such operation be by himself or by a subcontractor or anyone directly or indirectly employed by either of them, such insurance as required by statute, ordinance or this contract, to adequately protect the Owner from any claims or damages, including bodily injury or death, which may arise from them during operations under this contract.

14.20.1.1 The insurance requirements set forth in these instructions are established to provide assurance that as a minimum the Contractor shall perform the indemnification required by paragraph 31.0 et.seq.

14.20.1.2 All insurance required shall be primary insurance as respects the City, its officials, employees and volunteers. Any insurance or self-insurance maintained by the City, its officials, employees, or volunteers shall be in excess of insurance provided by the Contractor and shall not contribute to it.

14.20.1.3 Insurance shall be obtained for not less than the limits of liability as specified in these instructions.

14.20.1.4 The Contractor shall include all subcontractors as insured under its policies or shall furnish separate certificates and endorsements for each subcontractor. All coverage for subcontractors shall be the same as provided in these instructions for the Contractor.

14.20.1.5 Each insurance policy required by these instructions shall be endorsed to state that coverage shall not be suspended, voided, canceled by either party, reduced in coverage or in limits unless minimum thirty (30) days prior written notice is given

with the exception of (10) days prior written notice for nonpayment of premiums only, by certified mail, return receipt requested, has been given to the City.

14.20.2 Worker's Compensation Insurance: The Contractor shall procure and shall maintain during the life of this contract, Workman's Compensation Insurance for all of the employees to be engaged in work on the project under this contract, and in case any such work is sublet, the Contractor shall require the subcontractor similarly to provide Workmen's Compensation Insurance for all of the latter's employees to be engaged in such work unless such employees are covered by the protection afforded by the Contractor's Workmen's Compensation Insurance. The Contractor shall not permit any person who is not protected by Worker's Compensation Insurance or a properly approved self-insured Worker's Compensation Program to perform any activity related to this contract.

14.20.3 Liability Insurance: The Contractor shall procure and maintain for the duration of the contract insurance against claims for any injuries to persons or damages to property which may arise from or in connection with the performance of the work hereunder by the Contractor, his agents, representatives, employees or subcontractors. The City of Columbia shall be specifically covered as an insured in all liability policies obtained in compliance with the provisions of this paragraph. The amount of such insurance shall be as follows:

14.20.3.1 Commercial General Liability Insurance: Coverage at least as broad as Insurance Service Office Form CG 00 01 11 85 in an amount not less than $1,000,000.00 per occurrence and $2,000,000.00 aggregate combined single limit for bodily injury, personal injury, and property damage.

14.20.3.2 Automobile Liability Insurance: $500,000.00 combined single limit per accident for bodily injury and property damage.

14.20.4 Owner's and Contractor's Protective Liability Insurance: In addition to all other insurance requirements contained in these instructions, the Contractor shall provide a separate policy of Owner's and Contractor's Protective Liability Insurance issued in the name of the City in an amount not less than $2,000,000.00 per occurrence combined single limit for bodily injury, personal injury, and property damage with an aggregate liability, not less than $2,000,000.00. Coverage shall be at least as broad as provided in Insurance Service Office Form CG 00 09 11 85.

14.20.4.1 Excess Liability Policy naming the contractor or other person who will be performing the activity as insured and also naming the City as an additional insured in an amount not less than $10,000,000.00 for bodily injury, personal injury, property damage and products completed operations. (Coverage shall be at least as broad as provided for in the most current version of the Insurance Services Office Form applicable to such policy.)

14.20.5 Builder's Risk Insurance: For the full contract price with the City as an insured and the Contractor as an additional insured.

14.20.6 Flood Insurance: The Contractor is required to carry, during the construction period, flood insurance for projects located in designated flood hazard areas in which the Federal Flood Insurance is available.

14.20.7 Proof of Coverage of Insurance: The Contractor shall furnish the City with a certificate showing satisfactory proof of carriage of the insurance required and such insurance shall be approved by the City prior to commencing work on his contract nor shall the Contractor allow any subcontractor to commence work on his subcontract until all similar insurance required of the subcontractor has been so obtained and approved.

14.20.8 Scope of Insurance: The insurance required under Items 20.3, 20.4, 20.5, and 20.6 hereof shall provide adequate protection for the Contractor and his subcontractors, respectively, as well as the Owner, against damage claims which may arise from operations under this contract, whether such operations be by the insured or by anyone directly or indirectly employed by him.

14.20.9 Special Hazards: The Contractor's and his subcontractor's Public Liability and Property Damage Insurance shall provide adequate protection against the following special hazards: Use of explosives, excavation, shoring and electrical hazards.

14.21 ACCIDENT PREVENTION - Precaution shall be exercised at all times for the protection of persons and property. The safety provisions of applicable laws, building and construction codes shall be observed. Machinery, equipment, and other hazards shall be guarded in accordance with the safety provisions of the Manual of Accident Prevention in Construction, published by the Associated General Contractors of America, to the extent that such provisions are not in contravention of applicable laws.

14.22 POWER OF ATTORNEY - Attorneys-in-fact who sign bid bonds or contract bonds must file with each bond a certified and effectively dated copy of their power of attorney.

14.23 NOTICE OF SPECIAL CONDITIONS

14.23.1 Attention is particularly called to those parts of the contract documents and specifications which deal with the following:

14.23.1.1 Inspection and testing of materials.

14.23.1.2 Insurance requirements.

14.23.1.3 Wage rates.

14.23.1.4 Stated allowance.

14.23.1.5 Nondiscrimination in employment.

14.24 LAWS AND REGULATIONS - The Bidder's attention is directed to the fact that all applicable State laws, municipal ordinances, and the rules and regulations of

all authorities having jurisdiction over construction of the project shall apply to the contract throughout and they will be deemed to be included in the contract the same as though herein written in full.

14.25 METHOD OF AWARD - LOWEST RESPONSIBLE BIDDER

14.25.1 The contract will be awarded, if it is awarded, to the lowest responsible bidder. Owner will decide which is the lowest responsible bidder, and in determining such bidder, the following elements will be considered for each bidder:

14.25.1.1 Maintains a permanent place of business.

14.25.1.2 Has adequate plant, equipment and personnel to perform the work properly and expeditiously.

14.25.1.3 Has suitable financial status to meet obligation incident to the work.

14.25.1.4 Has appropriate technical experience.

14.25.2 The Owner reserves the right to waive any formalities or to reject any or all bids and to make such awards, as in the opinion of the City, appears to be to the best interest of the City.

14.26 SIGNATURE TO BIDS - Each bid must give the full business address of the bidder and be signed by him with his usual signature. Bids by partnerships must furnish the full names of all partners and must be signed with the partnership name by one of the members of the partnership or by an authorized representative, followed by the signature and designation of the person signing. Bids by corporations must be signed with the legal name of the corporation, followed by the names of the state of incorporation and by the signature and designation of the president, secretary, or other person authorized to bind it in the matter. The name of each person signing shall also be typed or printed below the signature.

A bid by a person who affixed to his signature the word "president", "secretary", "agent", or other designation, without disclosing his principal, may be held to be the bid the individual signing. When requested by the Owner, satisfactory evidence of the authority of the officer signing in behalf of the corporation shall be furnished.

14.27 BIDS FOR ALL OR PART - Where bids are not qualified by specific limitation, the Owner reserves the right of awarding all or any of the schedules according to its best interest. Unless otherwise required in the specifications, bids for supplies shall be submitted in accordance with the numbered item or items given in the schedule. Alternative bids will not be considered unless called for on proposal forms or in the SPECIAL PROVISIONS.

14.28 CONSTRUCTION SCHEDULE AND PERIODIC ESTIMATES

14.28.1 Immediately after execution and delivery of the contract and before the first partial payment is made, the Contractor shall deliver to the City an estimated construction progress schedule in form satisfactory to the City, showing the

proposed dates of commencement and completion of each of the various subdivisions of work required under the contract documents and the anticipated amount of each monthly payment that will become due the Contractor in accordance with the progress schedule.

14.28.1.1 The Contractor shall also furnish: (a) a detailed estimate, giving a complete breakdown of the contract price; and (b) periodic itemized estimates of work done for the purpose of making partial payments thereon. The costs employed in making up any of these schedules will be used only for determining the basis of partial payments and will not be considered as fixing a basis for additions to or deductions from the contract price.

14.28.2 Equipment delivery schedule: The Contractor shall also prepare a schedule of anticipated shipping dates for materials and equipment. It is intended that equipment and materials be so scheduled as to arrive at the job site just prior to time for installation to prevent excessive materials on hand for inventory and the necessity for extensive storage facilities at the job site.

14.29 PAYMENT

14.29.1 On or before the fifteenth (15) day of each month, the City will pay to the Contractor ninety (90) percent of the value of the work performed, less aggregate of previous payments, as estimated by the City Engineer, provided the Contractor submits his estimate on or before the third day of the month. Estimates submitted later will require additional time for processing for payment.

14.29.1.1 In preparing estimates, the material delivered on the site and preparatory work done may be taken into consideration.

14.29.1.2 All material and work covered by partial payments made shall thereupon become the sole property of the City, but this provision shall not be construed as relieving the Contractor from the sole responsibility for the care and protection of materials and work upon which payments have been made or the restoration of any damaged work, or as a waiver of the right of the City to require the fulfillment of all the terms of the contract.

14.29.2 Upon final completion and acceptance by the City of all work covered under this contract, the City will pay to the Contractor the amount remaining to be paid him under the contract. The final pay request must include a materials list.

14.30 SPECIAL NOTICE TO BIDDERS ON CONTRACTS OVER $1,000,000.00

14.30.1 On EPA funded projects, the Environmental Protection Agency requires a pre-award conference if a proposed construction contract exceeds one million dollars to determine if the prospective contractor is in compliance with the Equal Employment Opportunity requirements of Executive Order 11246 of September 24, 1965.

14.30.2 In such instances, the Environmental Protection Agency may schedule a meeting at which the prospective contractor must specify what affirmative action he has taken or proposes to take to assure equal employment opportunity which must be

approved by the Environmental Protection Agency before award of the contract will be authorized.

14.31 INDEMNIFICATION

14.31.1 The Contractor will indemnify and hold harmless the Owner and the Engineer and their agents and employees from and against all claims, damages, losses and expenses, including attorney's fees arising out of or resulting from the performance of the work, provided that any such claims, damage, loss or expense is attributable to bodily injury, sickness, disease or death, or the injury to or destruction of tangible property, or taking of property, including the loss of use resulting therefrom; and is caused in whole or in part by any negligent or willful act or omission of the Contractor and Subcontractor, anyone directly or indirectly employed by any of them or anyone for whose acts any of them may be liable.

14.31.2 In any and all claims against the Owner or Engineer or any of their agents or employees, by any employee of the Contractor, any Subcontractor, anyone directly or indirectly employed by any of them, or anyone for whose acts any of them may be liable, the indemnification obligation shall not be limited in any way by any limitation on the amount or type of damages, compensation or benefits payable by or for the Contractor or any Subcontractor under workmen's compensation acts, disability benefit acts or other employee benefit acts.

14.31.3 The obligation of the Contractor under this paragraph shall not extend to the liability of the Engineer, his agents or employees arising out of the preparation or approval of maps, drawings, opinions, reports, surveys, change orders, designs or specifications.

14.31.4 The Contractor agrees to and fully indemnify, defend, hold harmless and reimburse the Owner, the Engineer and their respective agents, employees and successors from and against any and all losses, liabilities, judgments, expenses, costs and all claims for damages of any nature whatsoever:

- relating to or arising out of any action or failure to act; or,
- resulting from a taking of property, real or personal, or by inverse condemnation; or,
- relating to or arising out of the performance or failure to perform any of the obligations required by the contract; or,
- resulting from failure to comply with or violation of any local, state or federal regulation

by the Contractor, its subcontractors, officers, agents and employees or for anyone for whose acts any of them may be liable for. Losses, liabilities, expenses and claims for damages shall include, but not limited to, civil and criminal fines and penalties, judgments, loss of use and/or services, bodily injury, injury to or the taking of real or personal property, defense costs and attorney’s fees.

14.32 SUBCONTRACTING OUTREACH PROGRAM

14.32.1 The attention of bidders is directed to the Subcontracting Outreach Program. All bidders are required to comply with the terms and conditions of this policy stated in this section if specified.

14.32.2 The Subcontracting Outreach Program documentation and forms contained in the bid documents are required to be submitted with the bidder's proposal on the day the bids are opened. Failure to submit the required documentation within the appropriate time frame will cause a bid to be rejected as non-responsive.

14.32.3 The Contractor shall identify all subcontractors and vendors, including disadvantaged businesses, to be used on this project on the sheet provided as part of the bid proposal. The Contractor shall require all subcontractors and vendors to keep their bids confidential. The Contractor shall, in performance of the Contract, only use those subcontractors and vendors upon which the Contractor's bid was based. Subcontractor and vendor substitutions shall only be made upon the Owner's approval. The Contractor shall enter into contracts with those subcontractors and vendors, in the same dollar amount upon which the Contractor's bid was based, prior to award of the Contract. Such contracts shall be contingent upon award of the Contract by the Owner and the Owner's Notice to Proceed to the Contractor. Each pay request shall identify the dollar amount that will be paid to each subcontractor and vendor for work performed and materials/products furnished under the Contract. The Contractor shall provide the name of each subcontractor and vendor and a description of the work performed and materials/products furnished by each subcontractor and vendor and the dollar amount to be paid to each subcontractor and vendor.

14.33 MENTOR-PROTÉGÉ PROGRAM

14.33.1 The City of Columbia shall encourage, where economically feasible, establishment of mentor-protégé relationships to ensure contracting opportunities for all businesses, including minority / women / small business enterprises. The Mentor-Protégé Program (MPP) helps develop private sector business relationships and enhances the contracting capabilities of minority-owned business enterprises (MBE), women-owned business enterprises (WBE), and small business enterprises (SBE). In order to provide opportunities for growth and to encourage hands-on business relationships, certain capital improvement projects may be designated by the City of Columbia as Mentor-Protégé Program projects.

14.33.2 If the City of Columbia determines that participation in the City's Mentor-Protégé Program is required for this project, in order to be deemed responsive, a bid must be submitted by a participant in the Mentor-Protégé Program who is in compliance with the guidelines of the Program. Before Notice of Award, a Mentor-Protégé Implementation Plan must be submitted and the successful bidder must substantially comply with the terms of the Implementation Plan for the duration of the project. For more information about the Mentor-Protégé Program contact City of Columbia Office of Business Opportunity.

14.34 Proposal Bid for Unit Price Contracts

PROPOSAL

BID FOR UNIT PRICE CONTRACTS

TO THE HONORABLE MAYOR AND CITY COUNCIL:

LADIES AND GENTLEMEN:

The undersigned bidder hereby declares that the names of all persons interested in this proposal as principals appear in the blank spaces hereinafter provided for such purpose; that this proposal is in all respects fair and without collusion; that the bidder has examined the location of the proposed work, the advertisement, the instructions to bidder, the specifications, the contract, the plans and drawings herein referred to and fully understands the same and agrees and accepts the terms and conditions thereof; that it is understood that the estimated quantities are only approximate and are given for the purpose of comparing bids upon a uniform basis; and that said estimate shall in no way affect the unit prices to be paid for the work.

The undersigned bidder hereby agrees that he will furnish at his own cost and expense all of the materials, except those agreed to be furnished by the City as hereinafter set out, and all the necessary labor, tools, apparatus, machinery, equipment, transportation and all other things which may be required to fully and properly perform all the terms, covenants, provisions and agreements of the annexed contract.

The undersigned hereby agrees to do said work and furnish said materials as prescribed in the contract and specifications and according to the plans and requirements of the contract and specifications in a first class manner at the following unit prices:

Addendum No._____ Date _____

Addendum No._____ Date _____

Addendum No._____ Date _____

Addendum No._____ Date _____

14.35 Proposal Bid for Stipulated Sum Contracts

PROPOSAL

BID FOR STIPULATED SUM CONTRACTS

TO THE HONORABLE MAYOR AND CITY COUNCIL:

LADIES AND GENTLEMEN:

The undersigned bidder hereby declares that the names of all persons interested in this proposal as principals appear in the blank spaces hereinafter provided for such purpose; that this proposal is in all respects fair and without collusion; that the bidder has examined the location of the proposed work, the advertisement, the instructions to bidder, the specifications, the contract, the plans and drawings herein referred to and fully understands the same and agrees and accepts the terms and conditions thereof.

The undersigned bidder hereby agrees that he will furnish at his own cost and expense all of the materials, except those agreed to be furnished by the City as hereinafter set out, and all the necessary labor, tools, apparatus, machinery, equipment, transportation and all other things which may be required to fully and properly perform all the terms, covenants, provisions and agreements of the annexed contract.

The undersigned hereby agrees to do said work and furnish said materials as prescribed in the contract and specifications and according to the plans and requirements of the contract and specifications in a first class manner at the following unit prices:

Addendum No._____ Date _____

Addendum No._____ Date _____

Addendum No._____ Date _____

Addendum No._____ Date _____

The undersigned proposes and agrees to begin the work on a date to be specified in a written order of the Owner and to complete the amount of work herein contemplated within _____ consecutive calendar days from and including the said date of commencement.

The bidder hereby agrees to enter into a contract to begin and complete said work according to plans, specifications and all the terms and conditions of the advertisement, instructions to bidder, and of the proposal, and within ten (10) days from the date of acceptance of this proposal, will furnish the required bonds and insurance.

Attached hereto is a bid bond or certified check for the sum of _____ _____ ($_____) Dollars payable to The City of Columbia, which check shall be held by the City (1) until the successful bidder shall have executed, as required, the contract and bond, and (2) in the event that the contract is awarded to the undersigned and he shall fail to execute, as required, the contract and bond, then the said check shall be retained as and for liquidated damages for such failures, otherwise the said check shall be returned to the undersigned.

The undersigned hereby agrees that the City has the right to reject any or all bids and the undersigned shall not dispute the quantities used in preparing the bids.

Respectfully submitted,

SEAL
(if bid is by a Corporation)

_____
Signature of Person, Firm or
Corporation Making Bid

_____
Title

_____

_____

_____
Business Address

S.C. Contractor's License No: _____

14.36 Bid Bond

BID BOND

KNOW ALL MEN BY THESE PRESENTS that we, the undersigned _____ as Principal, and _____. As Surety, are hereby held and firmly bound unto The City of Columbia, South Carolina, as owner, in the penal sum of _____ _____for payment of which, well and truly to be made, we hereby jointly and severally bind ourselves, our heirs, executors, personal representatives, administrators, successors and assigns.

Signed this _____ day of _____, _____

The condition of the above obligation is such that whereas the Principal has submitted to the CITY OF COLUMBIA a certain bid, attached hereto and hereby made a part to enter into a contract in writing, for the _____ _____.

NOW, THEREFORE:

(a) If said Bid shall be rejected, or in the alternate,

(b) If said Bid shall be accepted, and the Principal shall execute and deliver a contract in the Form of Contract attached hereto (properly completed in accordance with said Bid) and shall furnish a bond for his faithful performance of contract, and for the payment of all persons performing labor or furnishing materials in connection therewith, and shall in all other respects perform the agreement created by the acceptance of said Bid,

Then this obligation shall be void, otherwise the same shall remain in force and effect; it being expressly understood and agreed that the liability of the Surety for any and all claims hereunder shall, in no event, exceed the penal amount of this obligation as herein stated.

The Surety, for value received, hereby stipulates and agrees that obligations of said Surety and its bond shall be in no way impaired or affected by any extension of the time within which the Owner may accept such Bid; and said Surety does hereby waive notice of any such extension.

IN WITNESS WHEREOF, the Principal and the Surety have hereunto set their hands and seals, and such of them as are corporations have caused their corporate seals to be hereto affixed and these presents to be signed by their proper officers, the day and year first set forth above.

_____	_____
Attest	Principal
_____	_____
Attest	Surety
SEAL	By:_____
Countersigned	
By _____	
Attorney-in-Fact, State of South Carolina	

CERTIFICATE AS TO CORPORATE PRINCIPAL

I, _____, certify that I am the secretary of the corporation named as principal in the within bond; that _____, who signed the said bond on behalf of the principal was then the _____ of the said corporation and duly authorized to sign on the said corporation's behalf; that I know the signatory's signature and the signatory's signature on the within bond is genuine; and, that the said bond was duly signed, sealed and attested to, for and on behalf of the said corporation.

_____
(Corporate Seal)

By:_____
Its: Secretary

(Power-of-attorney for person signing for surety company must be attached to bond.)

14.37 Equal Employment Opportunity

A. During the performance of this Contract, the Contractor agrees as follows:

1. The Contractor shall not discriminate against any employee, or applicant for employment, because of race, religion, color, sex, or national origin. As used herein, the words "shall not discriminate" shall mean and include, without limitation, recruited, whether by advertising or other means; compensated, whether in the form of rates of pay, or other forms of compensation; selected for training including apprenticeship; promoted; upgraded; demoted; downgraded; transferred, laid-off; and terminated.

2. The Contractor shall in all solicitation or advertisement for employees, placed by or on behalf of the Contractor, state that all qualified applicants will receive consideration for employment without regard to race, religion, color, sex or national origin.

3. The Contractor shall send to each labor union or representative of the workers, with which the Contractor has a collective bargaining agreement or other contract or understanding, a notice advising the labor union or worker's representative of the Contractor's commitments under the Equal Employment Opportunity program of the Owner and under this Article and shall post copies of the notice in conspicuous places available to employees and applicants for employment.

4. The Contactor and his subcontractors shall file compliance reports at reasonable times and intervals with the Owner in the form and to the extent prescribed by the Owner. Compliance reports filled at such times as directed shall contain information as to the employment practices, policies, programs and statistics of the Contractor and their subcontractors.

B. The Owner is committed to ensuring full and equitable participation by subcontracting businesses in provision of goods and services on the contractual basis. Bidders shall be fully informed of the Subcontracting Outreach Program as set forth in the contract documents. The program requires bidders to make subcontracting opportunities available to a broad base of qualified subcontractors and to meet or exceed the mandatory level of subcontracting participation. The Owner supports a healthy, free market system that seeks to include responsible businesses and provide maximum opportunities for business growth and development.

C. The Contractor shall identify all subcontractors and vendors, including Disadvantaged Business Enterprises, Disabled Veteran Business Enterprises and Other Business Enterprises, to be used on this project on the sheet provided as part of the bid proposal. The Contractor shall require all subcontractors and vendors to keep their bids confidential. The Contractor shall, in performance of the Contract, only use those subcontractors and vendors upon which the Contractor's bid was based. Subcontractor and vendor substitutions shall only be made upon the Owner's approval. The Contractor shall enter into contracts with those subcontractors and vendors, in the same dollar amount upon which the Contractor's bid was based, prior to award of the Contract. Such contracts shall be contingent upon award of the Contract by the Owner and the Owner's Notice to Proceed to the Contractor. Further, such contracts shall constitute a Condition Precedent to the Owner's obligation to pay for any work performed under the Contract for Construction. Each pay request shall identify the dollar amount that will be paid to each subcontractor and vendor for work performed and materials/products furnished under the Contract. The Contractor shall provide the name of

each subcontractor and vendor and a description of the work performed and materials/products furnished by each subcontractor and vendor and the dollar amount to be paid to each subcontractor and vendor.

14.38 Subcontracting Outreach Program Agreement

Project #

SUBCONTRACTING OUTREACH PROGRAM AGREEMENT

I, _____, hereby certify that I am _____ of the named Contractor in the forgoing Bid; that I have read the requirements of the Contract Documents related to Subcontracting Outreach Program utilization for the Project, and hereby agree to comply with all requirements of the Contract Documents related to issuance of the Notice of Award.

By: _____

Name: _____
(Print of Type)

Title: _____

Subscribed and Sworn to before me this _____ day of _____, 2004

_____
(Notary Public Signature)

My Commission Expires: _____

14.39 Business Information Records

Project Number and Description
Business Information Records

The Bidder shall list all subcontractors and vendors, who will be providing subcontracting services, furnishing materials, etc. for this project. The list shall be submitted in the format provided below. Any proposed changes from the list shall be submitted in writing to the Owner prior to initiation of any action, with the reason for the proposed changes.

Business Name and Address	Contact Name and Telephone Number	Service/Materials to be Provided	Anticipated Cost of Services/Materials ($ Value)

_____
Contractor

By

_____

_____
Date

Project #

Subcontracting Outreach Program
Documentation Form
To Be Completed By Contractor

Item	Indicator	Points Earned/ Available To Be Awarded on a Pass/Fail Basis (Please circle as appropriate)		Documentation Attached	Documentation To Follow	This Section to be Completed by City Staff: Date Approvable Documentation Received by City	Date Approvable Documentation Received by City
				(Check Appropriate Box for Each Item)			
1	Achievement of Advisory DBE/DVBE/OBE Subcontractor Participation Levels	0	0				
2	Pre-Bid Meeting Attendance	0	5				
3	Identification of Sufficient Subcontracting Work	0	10				
4	Broad Based Advertisement	0	10				
5	Written Notice to Subcontractors	0	10				
6	Follow-up to Initial Solicitations	0	10				
7	Provision of Plans, Specifications and Requirements	0	10				
8	Request for Assistance from Recruitment/ Placement Agencies	0	10				
9	Documentation of Subcontractor Negotiation	0	25				
10	Assistance with Bonds, Credit Lines and Insurance	0	10				
	Total Points Earned Per Contractor	_____	_____			**TOTAL**	_____
	Company Name:	_____				Date	_____
	SC Contractor's License Number:	_____				Initials	_____

I have complied with the requirements of the Subcontracting Outreach Program. There is documentation to support awarding points as indicated above. Failure to provide approvable documentation in the designated time frame will result in failure to meet the requirements of the program, therefore, the bid will be rejected as non-responsive.

Contractor's Signature _____ Date: _____

14.41 Contract Form

CONTRACT

THIS AGREEMENT made this _____ day of _____, 2000, by and between The City of Columbia, South Carolina, herein called "Owner" acting herein through its _____City Manager_____ ____ __,
(title of authorized official)

and _____ ____

STRIKE OUT INAPPLICABLE TERMS

(a corporation) (a partnership)
(an individual doing business as _____)

Of _____, County of _____ ____, State of

_____, hereinafter called "Contractor."

WITNESSETH: That for and in consideration of the payments and agreements hereinafter mentioned, to be made and performed by the OWNER, the CONTRACTOR hereby agrees with the OWNER to commence and complete the construction described as follows: _____
_____,
hereinafter called the project, for the sum of _____ ($_____) Dollars and extra work in connection therewith, under the terms as stated in the Specifications and Contract documents, and at his/its/their own proper cost and expense to furnish all the material, supplies, machinery, equipment, tools, superintendence, labor, insurance, and other accessories and service necessary to complete the said project in accordance with the conditions and prices stated in the Proposal, the instruction to Bidders, the General Conditions of the Contract or General Specifications, he construction specifications, provisions of the contract documents, the plans, which include all maps, plats, blue prints, and other drawings and printed or written explanatory matter thereof.

The Contractor hereby agrees to commence work under this contract on or before a date to be specified in a written "Notice to Proceed" of the OWNER and to fully complete the project within _____ consecutive calendar days thereafter. The "Notice To Proceed" shall be issued in the form of the specimen Notice To Proceed annexed hereto. The giving of notice to proceed by owner is a condition precedent to the duty of the contractor to proceed by owner is a condition precedent to the duty of the contractor to proceed with the work of this project and to the duty of the owner to pay for such work. Any work performed or other services rendered by the contractor prior to the giving of the "Notice to Proceed" is performed or rendered at the sole risk of the contractor. The Contractor further agrees to pay liquidated damages in the amount of two hundred fifty ($250.00) dollars for each consecutive calendar day that the work remains incomplete following the contract completion date established in the Notice To Proceed.

The Owner agrees to pay the Contractor in current funds for the performance of the contract, subject to additions and deductions, as provided in the contract documents.

IN WITNESS WHEREOF, the parties to these presents have executed this contract in four (4) counterparts, each of which shall be deemed an original in the year and day first above mentioned.

(SEAL) THE CITY OF COLUMBIA, SOUTH CAROLINA
Attest:

_____ By _____
City Clerk City Manager

(SEAL) _____
(Contractor)

_____ By_____

_____ _____
Witnesses (Title)

_____

_____
(Address)

NOTE: Secretary of the Owner should attest. If Contractor is a corporation, Secretary should attest.

14.42 Notice To Proceed Form

NOTICE TO PROCEED

TO: (name and address of contractor)

FROM: (name of official)

RE: (Project No. and description of project)

You are hereby directed to commence work on or before _____, 20___, and to fully complete the work of the project within the time specified in the contract for construction of the above project. The contract completion date is, therefore, established as _____, 20___.

Enclosed is an executed copy of the contract for your files.

_____
(signature of official)

_____
(date)

Enclosure

cc:

14.43 Performance-Payment Bond

PERFORMANCE-PAYMENT BOND

KNOW ALL MEN BY THESE PRESENTS That we

(1)_____, a (2)_____,

Hereinafter called Principal, and (3) _____,

State of _____, hereinafter called Surety, are held and firmly bound unto the (4) The City of Columbia, South Carolina, hereinafter called Owner, in the penal sum of

_____ ($_____)

Dollars in lawful money of the United States, for the payment of which sum well and truly to be made, we bind ourselves, our heirs, executors, administrators, personal representatives and successors, jointly and severally, firmly by these presents.

THE CONDITION OF THIS OBLIGATION is such that whereas the Principal entered into a certain contract with the Owner dated the _____ day of _____, a copy of which is hereto attached and made a part hereof for supplying certain

_____

_____

NOW, THEREFORE, if the Principal shall well, truly and faithfully perform its duties, all the undertakings, covenants, term, conditions and agreements of said contract during the original term thereof, and nay extensions thereof which may be granted by the Owner, with or without notice to the Surety and if he shall satisfy all claims and demands incurred under such contract, and shall fully indemnify and save harmless the Owner from all costs and damages which it may suffer by reason of failure to do so, and shall reimburse and repay the Owner all outlay and expense which the Owner may incur in making good default, and shall promptly make payment to all person, firms, subcontractors and corporations furnishing materials for or performing labor in the prosecution of the work provided for in such contract, and any authorized extension or modification thereof, including all amounts due for materials, lubricants, oil, gasoline, coal, and coke, repairs on machinery, equipment and tools, consumed or used in connection with the construction of such work, and all insurance premiums on said work, and for all labor performed in such work, whether by subcontractor or otherwise, thence this obligation shall be void; otherwise, to remain in full force and effect.

PROVIDED FURTHER that the said Surety, for value received, hereby stipulates and agrees that no change, extension of time, alteration or addition to terms of the contract or to the work to be performed thereunder or the specifications accompanying the same shall in any way effect its obligation on this bond, and it does hereby waive notice of any change, extension of time, alteration or addition to the terms of contract or to the work or to the specifications.

PROVIDED FURTHER that no final settlement between the Owner and the Contractor shall abridge the right of any beneficiary hereunder, whose claim may be unsatisfied.

IN WITNESS WHEREOF this instrument is executed in _____ counterparts each one of which shall be deemed an original this _____ day of _____.

ATTEST:

_____	_____
Principal Secretary	Principal
(SEAL)	By_____
_____	_____
Witness	Address
_____	
Witness	

ATTEST:

_____	_____
Surety Secretary	Surety
(SEAL)	By_____
_____	_____
Witness	Address
_____	
Witness	_____
	South Carolina Registered Agent

1. Name of Contractor
2. Corporation, Partnership, Individual
3. Name of Surety
4. Name of Owner
5. If partnership, all partners should execute Bond

(Attach Power of Attorney where applicable)

NOTE: Date of Bond must not be prior to date of Contract.

AIA DOCUMENT A201, 1997

CITY OF COLUMBIA MODIFICATION TO AIA DOCUMENT A201,
1997 EDITION

SUPPLEMENTARY CONDITIONS TO THE GENERAL CONDITIONS OF THE CONTRACT FOR CONSTRUCTION

EFFECT OF SUPPLEMENTARY CONDITIONS

The following supplementary conditions modify, delete and/or add to the GENERAL CONDITIONS. Where any article, paragraph or subparagraph in the GENERAL CONDITIONS in supplemented by one of the following paragraphs, the provisions of such article, paragraph, or subparagraph shall remain in effect and the supplemental provisions shall be considered as added thereto. Where any article, paragraph or subparagraph in the GENERAL CONDITIONS is amended, voided, or superseded by any of the following paragraphs, the provision of such article, paragraph or subparagraph not so amended, voided, or superseded shall remain in effect.

ARTICLE 1 – CONTRACT DOCUMENTS:
Add the following:

1.1.1.1 The instructions to Bidders, addenda and the Contractor's Bid shall be part of the Contract Documents.

1.1.6.1 In the event of conflict between the specifications and drawings, the provision of the specifications shall govern.

1.1.7.1 After the words, "Project Manual is" add the word "usually."

1.1.8 Wherever the word "ARCHITECT" appears in the GENERAL CONDITIONS, substitute therefore: "ARCHITECT/ENGINEER" ("A/E").

1.1.9 Wherever the phrase "Form of Agreement" appears in the General Conditions, substitute therefore the term "contract."

Modify subparagraph as follows:

1.5.2 Delete the word "generally."

ARTICLE 2 – OWNER
Modify subparagraph as follows

2.1.1 Delete the second and third sentences of this subparagraph. Last line delete "authorized" and substitute therefore "designated."

2.1.2 Delete subparagraph 2.1.2 in its entirety

2.2.1 Delete subparagraph 2.2.1 in its entirety

2.2.3 Delete the last sentences of this subparagraph.

2.2.4 Delete subparagraph 2.2.4 in its entirety.

2.2.5 Delete subparagraph 2.2.5 in its entirety and substitute the following:

"2.2.5 The A/E or Owner will furnish to the Contractor, free of charge, fifteen (15) copies of the Drawings and Specification and will furnish at actual cost of reproduction as many additional copies as each Contractor may require."

Add the following subparagraphs:

"2.4.2 The Owner reserves the right to perform any work on the site, whether within or without the scope of this contract, necessary to correct any conditions which at the sole discretion of the Owner pose a hazard to the health or safety of its employees or the general public. Such work will only be done on any emergency basis. If practical under the circumstances, the Contractor shall be given notice of any such conditions and given a reasonable opportunity to correct them. If work is done by the Owner pursuant to this subparagraph which is necessitated by any act or failure to act of the Contractor, the costs associated with such work shall be deducted from any sums due the Contractor and a written Change Order adjusting the contract sum will be issued."

ARTICLE 3 – CONTRACTOR

Modify subparagraphs as follows:

3.1.2 After the words "Contract Documents" add the words "and submittals approved pursuant to paragraph 3.12."

3.2.1 In the first sentence after the words "Subparagraph 2.2.3" add the words "and other information known to the Contractor." In the first sentence delete the words "of any existing" and substitute and "verify field." Delete the second sentence in its entirety.

Add the following subparagraphs:

3.2.1.1 The following principles shall govern the settlement of disputes which may arise over discrepancies in the contract of documents: (a) as between figures given on drawings and the scaled measurements, the figures shall govern – no measurements should be taken by scale as working dimensions except on large-scale drawings not dimensions in detail; (b) as between large-scale drawings and small-scale drawings, the larger scale shall govern; (c) as between drawings and specification, requirements of the specifications shall govern; and (d) as between the Form of Agreement and the Specifications, requirements or the Form of Agreement shall govern. The principles set forth herein shall not alter provision of Article 1.2.

Modify subparagraphs as follows:

3.2.2 In the first sentence delete the word "design", add the word "inconsistencies" after the word "errors"; delete the word "noted" and substitute the word "discovered"; and, place a period after the word "Architect." Delete the remainder of the first sentence beginning with the word "but." Delete the second sentence in its entirety.

3.2.2 Delete the first and third sentences of this Subparagraph.

3.2.3 Delete the third, fourth and fifth sentences of this Subparagraph.

3.7.1.1 Each subcontractor shall apply for, obtain, and pay the cost of a permit and inspection fees for inspection services for his contract portion of the work.

3.7.1.2 The City of Columbia Code of Ordinances requires Certificates to Occupancy upon project completion. It shall be the responsibility of the General Contractor to obtain these permits from the City Inspection Department.

Modify subparagraph 3.8.1 by deleting from said subparagraph the word "but the Contractor shall not be required to employ persons or entities against which the Contractor makes reasonable objection."

Add the following subparagraphs:

3.8.4 The amount due the Contractor for any allowances shall be based upon certified copies of invoices from suppliers and subcontractors and shall not included any costs provided for in Paragraph 3.8.2.2.

3.9.2 The superintendent shall maintain a written daily log of the progress of the work and all communications to or from the architect or Owner. This log shall be kept at the job site and shall be available for inspection upon request by the A/E or Owner.

3.10.1.1 This schedule shall indicate the dates for the starting and completion of various stages of construction and shall be revised monthly as required by the conditions of the work. This schedule shall be broken down into work items as the Owner may require for proper review.

3.10.1.2 The Contractor shall submit, along with the initial progress schedule, a shop drawing schedule showing items requiring review or approval by the A/E. The shop drawing schedule shall show the time requiring approval and the date receipt of approval is required."

Modify Subparagraph 3.10.3 by deleting the word "general."

Modify Subparagraph 3.11.1 by deleting the word "field" and substituting the word "any."

Modify Subparagraph 3.12.9 by deleting the second sentence.

Modify Subparagraph 3.18.1 by deleting the words "and to the extent claims, damages, losses or expenses are not covered by Project Management Protective Liability Insurance purchased by the Contractor in accordance with paragraph 11.3"

ARTICLE 4 – ADMINISTRATION OF THE CONTRACT

Modify subparagraph as follows:

4.1.1 Substitute the following in lieu of subparagraph 4.1.1: 4.1.1 The Architect is the person designated by the Owner to act in the capacity as Architect under this agreement. The term includes the architect's authorized representative.

4.1.2 Third line following"…Owner" delete "the Contractor."

4.1.3 Delete subparagraph 4.1.3 in its entirety.

Add the following:

4.1.4 In the Specifications or on the Drawings, where the words "as directed," "as required," "as approved," "as permitted," or words of like effect are used, Contractor shall understand that direction, requirement, approval or permission of A/E is intended. Similar words

"approved," "acceptable," "satisfactory," or words of like import mean approved by, acceptable to or satisfactory to A/E."

Modify as follows:

4.2.1 Second and third lines following "construction" delete "until final payment is due," and add therefore "during the warranty period."

4.2.1 First sentence delete the words "as a representative of the Owner."

4.2.5 After the words "Architect's evaluations" add the words "and observations."

4.2.6 Delete the last sentence of this subparagraph.

4.2.10 Delete this subparagraph and insert the following in lieu thereof:

"4.2.10 If a Project Representative is provided, his duties, responsibilities and limitations of authority shall be as set forth in DUITES, RESPONSIBILITIES AND LIMITATIONS OF AUTHROITY OF FULL-TIME PROJECT REPRESENTATIVE, AIA DOCUMENT B352, latest edition, copy of which will be provided to Owner, Contractor and Project Representative."

4.2.12 Delete the second sentence of this subparagraph.

Add the following:

"4.2.14 During the twelfth month of the one year construction warranty, the A/E and Contractor will conduct a full and final inspection. The A/E will coordinate with the Contractor to set a date for this inspection. The A/E shall prepare a list of all discrepancies and send a copy to the Owner and the party responsible for correcting the discrepancies. The A/E shall notify the Owner in writing when all repairs have been accomplished."

Modify subparagraph 4.3.2 first line, by deleting the words, "either party" and by substituting the word "Contractor" therefore, and last sentence by deleting, "and the other party" and by substituting the word "Owner" therefor.

Modify subparagraph 4.3.3, by deleting the words "or as provided in Subparagraph 9.7.1 and Article 14."

Modify subparagraph 4.3.4 by deleting the sentence commencing on line 13 which reads "Claims by either party…notice of the decision."

4.3.6 Delete this subparagraph in its entirety.

4.3.10 Modify 4.3.10 by deleting the words "and Owner waive claims against each other" and substitute "waives claims against the Owner." Delete the work "mutual" throughout.

Modify 4.3.10.1 by deleting the word "Owner" and substituting "Contractor" therefore.

4.4.1 Modify subparagraph 4.4.1 by deleting the words "mediation, arbitration or" wherever such words appear.

4.4.2 Modify subparagraph 4.4.2 by deleting the word “approve the claim” in section (3) and substituting the words “recommend approval of the Claim by the other party.”

4.4.5 Modify subparagraph 4.4.5 by deleting the second sentence in it entirety.

4.4.6 Delete subparagraph 4.4.6 in its entirety.

4.4.8 Delete subparagraph 4.4.8 in its entirety.

4.5 Delete paragraph 4.5 in its component subparagraphs 4.5.1 through 4.5.3 inclusive entirely.

4.6 Delete paragraph 4.6 and its component subparagraphs 4.6.1 through 4.6.6 inclusive entirely.

ARTICLE 5 – SUBCONTRACTORS

5.2.3 Modify subparagraph 5.2.3 by substituting the word “or” for the word and so the text will read “Contract Sum or Contract Time” on the fourth line.

Add the following subparagraph:

5.3.2 The Contractor shall assure the Owner, by affidavit or in such other manner as the Owner may approve, that all agreements between the Contractor and his subcontractors incorporate the provisions of subparagraph 5.3.1 as necessary to preserve and protect the rights of the Owner and the A/E under the Contract Documents with respect to the work to be performed by subcontractors so that the subcontracting thereof will not prejudice such rights.”

5.4.2 Delete subparagraph 5.4.2 in its entirety.

ARTICLE 6 – CONSTRUCTION BY OWNER OR BY SEPARATE CONTRACTORS

6.1.4 Delete subparagraph 6.1.4 in its entirety

6.2.3 Delete the second sentence of the subparagraph in its entirety.

6.3.1 Modify this subparagraph by deleting the words “the Architect” fro the last sentence.

ARTICLE 7 – CHANGES IN THE WORK
Add the following:

“7.1.2.1 Change Orders and Construction Change directives are effective only after approval by the Owner.

Add the following subparagraphs:

“7.1.4 In determining the total cost or credit to the Owner resulting from a change in the work, the allowances for overhead and profit combined, including the total cost to the Owner, shall not exceed the percentages herein scheduled, as follows:

(1) For the Prime Contractor, for any work performed by his own forces, 15% of the direct cost;

(2) For each Subcontractor involved, work performed by his own forces, 15% of the direct cost;

(3) For the Prime Contractor, for work performed by his Subcontractor, &5 of the amount due the Subcontractor."

7.3.6.6 The "direct cost" as used herein may include all items of labor or materials, the use of power tools and power equipment and all such items of cost as public liability, workers' compensation insurance, pro rate charges for additional time of foreman, social security, and old age and unemployment insurance and bond premiums. Among the items to be considered as overhead are insurance other than that mentioned above, supervision, travel, superintendent, timekeepers, clerks, watchmen, small tools, incidental job burdens, general office expense, field office overhead, home office overhead, extended overhead of any kind, impact damages, delay damages, and all other items, costs or expenses not included in the direct cost as defined above."

Modify subparagraph as follows:

7.3.8 Delete the subparagraph 7.3.8 in its entirety and substitute therefore:

"Only fully executed Change Orders, signed by the Contractor, Architect/Engineer and Owner may be included in the Applications for Payment." If the Owner and the Contractor do not agree with the adjustment in contract time or the method for determining it, the adjustment or the method shall be referred to the Architect for determination.

ARTICLE 8 – TIME

8.2.2 Modify the first sentence of subparagraph 8.2.2 by deleting the words "and Owner" at the end of the sentence.

8.3 Delay and Extension of Time: Delete paragraph including subparagraphs 8.3.1, 8.3.2, and 8.3.3 in their entirety and substitute therefore the following:

"8.3 Delay and Extension of Time:

8.3.1 Completion time stipulated under other sections of the Contract Documents may be extended by Change Order or Construction Change Directive to provide one additional work day for each full work day that the Contractor is prevented from working by reason of one or more of the following causes:

.1 Unforeseeable causes beyond the control and without the fault or negligence of the Contractor, including but not limited to, catastrophes and/or acts of God, acts of another Contractor in the performance of a separate contract with the Owner, epidemics, quarantine restrictions, strikes or freight embargoes;

.2 An unusual amount of severe weather to such an extent as to be definitely abnormal and beyond conditions that may be reasonably anticipated. For the purpose of this contract, a total of three(3) working days per calendar month shall be anticipated as

"normally bad or severe weather, " and such time will not considered justification for an extension of time;

.3 Stoppage of work ordered by Owner for reasons over which Contractor has no control.

8.3.1.4 The Contractor shall, within ten (10) days after the beginning of such delay, notify the Owner and A/E in writing of the cause of the delay. The A/E will then ascertain the facts and extent of delay, and notify the Contractor within ten (10) days of the Owner's decision in the matter. Notice of delay and requests for extension of time shall set forth the cause and number of additional working days contractor desires contract extended.

8.3.2 No claims for extension of time will be considered when based on delays caused by conditions existing at the time bids were received and of which the Contractor might be reasonably expected to have full knowledge at the time of bidding, or upon delays caused by failure on the part of the Contractor to anticipate properly the requirements of the work contracted fro as to materials, labor and equipment. All claims for extension of time shall be made in writing to the A/E with the next application for payment; otherwise they shall be waived.

8.3.3 Completion date stipulated under other sections of the Contract Documents may be extended by Change Order to compensate for additional work that may be ordered by Owner, provided such work is over and beyond scope of work covered by original contractor, and is of such nature as to materially affect date of completion.

8.3.4 The Contractor shall not be entitled to any claim or compensation for damages on account of hindrances or delays from any cause whatsoever, but if occasioned by any act of God, or by any act or omission on the part of the Owner, such act, hindrance, or delay may entitle the Contractor to an extension of time in which to complete the work which shall be determined by the A/E, provided that the Contractor will give notice in writing of the cause of such act, hindrance or delay within ten (10) days after its occurrence.

8.3.5 In the event Contractor is delayed at any time in the progress of the work, extension of time shall be the Contractor's sole remedy for any such delay (except for Contractor's right to terminate this Agreement pursuant to any applicable provisions of the Owner-Contractor Agreement) unless the same shall have been caused by acts constituting intentional interference by the Owner with Contractor's performance of the work and where and to the extent that such acts continue after the Contractor's notice to the Owner of such interference. Written notice of intentional interference by the Owner must be given within ten (10) days of the occurrence or the claim is waived. The Owner's exercise of any of its rights under any applicable provisions of Article 7 of the General Conditions, regardless of the extent of number of changes in the work or requirement of corrections or re-execution of any of the work, shall not under any circumstances by construed as intentional interference with the Contractor's performance of the work."

ARTICLE 9 – PAYMENT AND COMPLETION

Add the following subparagraph:

"9.2.1.1 The Form of the Schedule of Values shall be AIA G703, continuation Sheet, latest edition."

Modify subparagraph as follows:

9.3.1 Third lien following "notarized," delete "if required."

Delete subparagraph 9.3.1.1 in its entirety and substitute therefore:

"9.3.1.1 The Form of the Application for Payment shall be AIA G702 Application and Certificate for Payment with the AIA G703 Continuation Sheet, latest edition. Computer generated Applications for Payment will be acceptable only if the computer generated form conforms exactly to the G702 Application and Certificate of Payment with the AIA G703 Continuation Sheet."

9.3.1.2 Modify this subparagraph by deleting the words "unless such work has been performed by others whom the Contractor intends to pay" and substitute therefore the words "because of a dispute or other reason."

Add the following subparagraphs:

"9.3.1.3 The A/E will authorize, as provided in Paragraph 9.4 and 9.5, monthly payment to equal to 90 per cent of the portion of the contract sum properly allocable to labor, material and equipment suitably stored until the work if fifty (50%) per cent complete.

.1 At the time the work is fifty (50%) per cent complete and providing that the Contractor is on or ahead of the schedule as determined by the Architect/Engineer and the work is satisfactory and in the absence of other good and sufficient reasons, the Contractor may request in writing, and prior to pay application, that the retention be reduced to five (5%) per cent of the amount due. Accompanied with the written request of retainage reduction the Contractor shall submit AIA G704A Consent of Surety to Reduction in or Partial Release of Retainage, latest edition.

.2 The full contract retainage may be reinstated if the manner and progress of the work does not remain satisfactory to the Architect/Engineer."

Add the following subparagraph:

"9.3.2.1 Rental equipment such as, but not limited to, mobile equipment, pans, forms, scaffolding, compressors, etc., shall not be considered material stored."

Modify the following:

9.4.2 In the first sentence after the words "Architect's evaluation of the work" and "observations at the site."

Modify the following:

9.6.7 Delete this subparagraph in its entirety.

9.7.1 Fourth line following "Architect," delete "or awarded by arbitratin."

9.8.1 Delete the words "or a designated portion thereof."

9.8.2 Delete the words “or a portion thereof” wherever these words appear in the subparagraph.

9.8.3 Delete the words “or designated portion thereof” wherever these words appear in the subparagraph.

9.8.4 Delete the words “or a portion thereof” wherever these words appear in the subparagraph.

9.8.5 Delete the second sentence in its entirety, and substitute therefore the following:

“Upon substantial completion of the work as certified by the A/E, the Owner shall make payment making any appropriate adjustments in retainage for the work provided for in the Contract Documents.

Add the following:

“9.10.1.1 When the Contractor is ready for final inspection, he shall give notice to the A/E with a copy to the Owner in the following words:

The work on the contract for (show name if improvement or project as it appears in the Form of Agreement) having been fully completed, except as stipulated herein below, it is requested that a final inspection be made promptly by the A/E. The following work is incomplete through no fault or negligence of the Contract or: (list any work the Contractor regards as exceptionable and after each item substantiate why its incompleteness is not due to his fault or negligence).

9.10.1.2 No final inspection shall be made until such time as the A/E and the Owner have received a letter in exact form indicated above.

9.10.1.3 The balance payable under conditions stated shall reflect retainage for thrice the value of uncompleted work, as determined by the A/E.”

9.10.3 Delete subparagraph 9.10.3 in its entirety.

9.10.4 Delete subparagraph 9.10.4 in its entirety.

9.10.5 Delete the words “except those previously made in writing and identified by that payee as unsettled at the time of final application for payment” and add the words “against the Owner.”

ARTICLE 10 – PROTECTION OF PERSONS AND PROPERTY
Add the following subparagraph:

10.3.3 Delete subparagraph 10.3.3 in its entirety.

10.5 Delete paragraph 10.5 in its entirety.

10.6.2 The Owner reserves the right to perform any work on the site necessary to correct any conditions which pose a hazard to the health or safety of employees or the general public.”

ARTICLE 11 – INSURANCE AND BONDS

Delete Paragraphs 11.1 through 11.5 inclusive and all component subparagraphs contained in Paragraphs 11.1 through 11.5.2, inclusive and substitute therefor the following:

11.1 The Contractor shall purchase and maintain in a company or companies acceptable to the Owner all insurance as specified in the Instructions to Bidders. The Owner shall be designated as an additional insured on all insurance policies and certificates of Insurance.

11.2 Contractor shall simultaneously with his delivery of the executed contract provide and pay the cost of Performance and Payment bonds, in the form of City of Columbia "PERFORMANCE – PAYMENT BOND." The Bond shall be in the full amount of the Contract Sum, issued by a Surety Company licensed in South Carolina, which Surety Company must be listed in the current version of United States Treasury Department Circular 570. Each Bond shall be accompanied by a "Power of Attorney" authorizing the attorney-in-fact to bind the surety and certified to include the date of the Bond.

11.3 The Owner reserves the right to accept or reject the qualifications of any bonding company submitted by the Contractor."

ARTICLE 12 – UNCOVEREING AND CORRECTION OF WORK

12.2.2.1 Modify subparagraph 12.2.2.1 by deleting the second and third sentences of said subparagraph.

12.2.23 Delete the subparagraph in its entirety.

ARTICLE 13 – MISCELLANEOUS PROVISIONS
Add the following subparagraphs:

13.1.1.1 By executing a contract for the Project, the Contractor agrees to submit itself to the jurisdiction of the Courts of the State of South Carolina for all matters arising or to arise hereunder, including but not limited to performance of said contract and payment of all licenses and taxes of whatever nature applicable thereto.

13.2.2 Delete this subparagraph in its entirety.

Add the following subparagraph:

13.5.2.1 Materials subject to test shall be inspected by a testing agency selected by the A/E and satisfactory to the Owner. The Contractor shall defray the costs of tests conducted pursuant to laws, ordinances, rules, regulations or order of any public authority having jurisdiction; the costs of test conducted for his own information and in his own interest: and the cost of tests which are named in the Technical Sections of the Specifications as test to be paid for by the Contractor. Otherwise, the Owner will pay expenses of routine initial testing. Where materials or methods fail to meet requirements by initial test, the Contractor shall defray costs of subsequent test until requirements are met."

Delete Paragraph 13.6 Interest and Subparagraph 13.6.1.

ARTICLE 14 – TERMINATION OR SUSPENSION OF THE CONTRACT

14.1.1 Modify subparagraph 14.1.1 by deleting subparagraphs 14.1.1.3 and 14.1.1.4.

14.1.2 Delete subparagraph 14.1.2 in its entirety.

14.1.3 Modify subparagraph 14.1.3 by deleting the words "or 14.1.2" and the words commencing on line 3 which read "and for proven loss...profit and damages."

Modify following subparagraphs:

14.2.2 Delete the following beginning on Lines 1 and 2 "upon the certification by the Architect that sufficient cause exists to justify such action."

Modify the following subparagraphs:

14.2.2.3 Delete the last sentence which reads "Upon request……the work."

Add the following subparagraphs:

14.2.2.3.1 The Owner shall not be required to proceed in completing the work at the lowest possible costs.

14.2.2.3.2 The costs of finishing the work may include but not be limited to: (1) cost of labor and material, (2) additional architectural services, (3) costs of advertising or bidding, (4) attorney fees, (5) administrative costs, and (6) all other costs or expenses directly or indirectly related to the termination.

Modify 14.2.4 by deleting the words "and not expressly waived."

14.2.5 Allowing the Contractor to re-enter the project and continue the work shall not constitute a rescission of the seven day notice previously given. If the Contractor fails or refuses to correct the conditions which gave rise to termination notice, the Owner may terminate the contract without any additional notice."

Modify subparagraph 14.3.2 to read as follows:

14.3.2 An adjustment shall be made for increases in the cost of performance of the Contract, including profit on the increased cost of performance, caused by suspension, delay or interruption ordered in writing by the Owner. No adjustment shall be made to the extent:

.1 that performance is, was or would have been so suspended, delayed or interrupted by another cause for which the Contractor is responsible; or

.2 that an equitable adjustment is made or denied under another provision of this Contract.

END OF SUPPLEMENTARY CONDITIONS

CITY ADMINSTRATIVE POLICIES AND PROCEDURES ’19-3

City of Columbia, South Carolina

SUBCONTRACTING OUTREACH PROGRAM

March 2003

Contents

Program Summary		2
A.	General	3
B.	Subcontractor Outreach and Participation	3
C.	Definitions	3
D.	Mandatory Subcontractor Outreach Efforts	5
E.	Documentation of Subcontractor Outreach Efforts	5
F.	Contract Award	9
G.	Subcontractor Substitution	10
H.	Falsification of Sub-Agreement	10
I.	Submission of Final Subcontracting Report	10

SUBCONTRACTING OUTREACH PROGRAM SUMMARY

The Subcontracting Outreach Program applies to City-funded construction contracts of Two Hundred Thousand and No/100 ($200,000.00) Dollars or more. When Federal or State funding sources impose additional requirements, those requirements as defined in the contract documents replace the requirements of this program.

The City of Columbia is committed to maximizing subcontracting opportunities for all qualified and available firms. Bidders should be fully informed of the Subcontracting Outreach Program as set forth in this document.

Subcontract 20%:

To be eligible for award of this project, the bidder must subcontract a minimum percentage of its bid to qualified available subcontractors, as indicated below. These subcontractor participation levels will be evaluated on an annual basis to ensure the appropriateness of those levels. The bidder must list all subcontractors, regardless of amount. Failure to list subcontractors and subcontracting amounts with the bid sufficient to meet or exceed the mandatory subcontracting and subcontracting amounts with the bid sufficient to meet or exceed the mandatory subcontracting participation level will cause a bid to be rejected as non-responsive.

Parks 20%
Pipelines (water and sewer) 20%
Pump Stations 20%
Street Improvements 20%
Traffic Signals/Street Lighting 20%
Buildings Project by project (not to exceed 49%)
Miscellaneous projects 20%

Submit Outreach Documentation

To be eligible for award of this project, the bidder must submit documentation of its subcontractor outreach effort either with the bid proposal, or separately with the City agency receiving the bids within five (5) calendar days following the close of business on the day bids are opened. Failure to submit required documentation within this time frame will cause a bid to be rejected as non-responsive. For assistance or further information about the Subcontracting Outreach Program, contact the Equal Business Opportunity Office.

SUBCONTRACTING OUTREACH PROGRAM

A. General

This program is subject to policies and requirements established by the City Manger=s Office. The City is committed to ensuring full and equitable participation by subcontracting businesses in provision of goods and services on a contractual basis. Bidders shall be fully informed of the Subcontracting Outreach Program as set forth in this document. Failure to comply with the City=s Subcontracting Outreach Program will cause a bid to be rejected as non-responsive.

Terms and conditions of this Subcontracting Outreach Program apply to City-funded construction project of Two Hundred Thousand and No/100 ($200,000.00) Dollars or more. At the City=s sole discretion, these requirements may be waived in advance on projects deemed inappropriate for subcontracting participation at the specified level. When State and/or Federal funding sources require affirmative action goals, those goals as defined in the contract documents replace requirements of this Subcontracting Outreach Program.

B. Subcontractor Outreach and Participation

This Subcontracting Outreach Program requires bidders to make subcontracting opportunities available to a broad base of qualified subcontractors and achieve a minimum of 20% (may be higher for construction of buildings) subcontractor participation.

C. Definitions

1. Disadvantaged Business Enterprise (DBE): A business which is at least fifty-one percent (51%) owned and operated by one or more socially and economically disadvantaged individuals and whose management and daily operation is controlled by the qualifying party or parties. In the case of a publicly-owned business, at least fifty-one percent (51%) of the stock must be owned by and the business operated by socially and economically disadvantaged individuals.

2. Disabled Veteran Business Enterprise (DVBE): A business which is at least fifty-one percent (51%) owned and operated by one or more veterans with a service-related disability and whose management and daily business operation is controlled by the qualifying party or parties.

3. Other Business Enterprise (OBE): A business which does not otherwise qualify as a Disadvantaged Business Enterprise or a Disabled Veteran Business Enterprise.

4. Subcontractor Outreach Efforts: Affirmative steps taken by a bidder prior to bid opening to ensure maximum effort to recruit subcontractors, including Disadvantaged Business Enterprises (DBEs), Disabled Veteran Business Enterprises (DVBEs) and Other Business Enterprises (OBEs), as sources of supplies, construction and other services whenever possible. Required steps for documenting outreach efforts are outlined in Paragraph E of this document.

5. Subcontract: Agreement between a prime contractor and an individual, firm or corporation for performance of particular portion or portions of work for which prime contractor has obligated itself.

6. Subcontractor: An individual, firm or corporation having a direct contract with prime contractor for performance of portion or portions of work to be contracted under the contract, including furnishing of labor, materials or equipment.

7. Vendor and/or Supplier: A firm that owns operates or maintains a store, warehouse or other establishment in which material or supplies required for performance of the contract are brought, kept in stock and regularly sold to the public in the usual course of business. As its principal business and in its own name, the firm must engage in purchase and sale of products in question. A vendor and/or supplier of bulk items such as steel, cement, stone and petroleum products need not keep such products in stock if it operates distribution equipment.

8. Manufacturer: An individual, firm or corporation operating or maintaining a factory or establishment that produces on the premises materials or supplies obtained by the contractor.

9. Subcontractor Participation: Disadvantaged Business Enterprises (DBEs) Disabled Veterans Business Enterprises (DVBEs) and Other Business Enterprises (OBEs) will be recognized as participants in a contract according to the following criteria:

   (a) For credit to be allowed toward respective subcontractor participation levels as a DBE or DVBE firms, such entities must be certified by the City in accordance with the definitions under Paragraph C, Items 1 and 2, and identified by the bidder as such in bid documents for data collection purposes.

   (b) A subcontractor must perform a commercially useful function for credit to be allowed toward subcontractor participation levels. A subcontractor must be responsible for execution of a distinct element of work and must carry out its responsibility by actually performing, managing and supervising the work.

   (c) In computing level of subcontractor participation, recognition for materials and/or supplies is limited to sixty percent (60%) of amount to be paid to vendor for such materials/supplies unless vendor manufactures or substantially alters materials/supplies.

D. Mandatory Subcontractor Participation Goal

The City has incorporated a mandatory subcontractor participation goal to enhance competition and maximize subcontracting opportunities. Based on review of subcontractor usage on City projects, the mandatory goal is:

MANDATORY
Subcontractor Participation Goal

20%

(May be higher for construction of building projects)

Failure to meet the subcontractor participation goal will cause a bid to be rejected as non-responsive.

Based on availability data for the preceding three years, the Chief of the Equal Business Opportunity Office shall annually establish advisory subcontract participation levels on an industry basis (e.g., construction, goods, services, and professional services) for each of the following classification of firms: Disadvantaged Business Enterprise (DBE), Disabled Veteran Business Enterprise (DVBE), and Other Business Enterprise (OBE). These DBE, DVBE, and OBE advisory subcontract participation levels shall be advisory only and shall not constitute a basis for determination of noncompliance or disqualification.

E. Documentation of Subcontractor Outreach Efforts

All documentation must be submitted with the bid proposal or within five (5) calendar days following close of business on the day bids are opened. Failure to submit required documentation to the contracting agency within this time frame will render a bid non-responsive. The City may request additional information to validate or clarify; such information must be submitted promptly upon request.

It is the policy of the City of Columbia to provide all subcontractors an equal opportunity to participate in performance of City contracts. Bidders assist the City in implementing this policy by taking reasonably steps to ensure all qualified businesses, including Disadvantaged Business Enterprises (DBEs), Disabled Veteran Business Enterprises (DBVEs), and Other Business Enterprises (OBEs), have equal opportunity to compete for and participate in City contracts.

Documentation of a bidder=s outreach efforts will be reviewed by the Chief of the Equal Business Opportunity Office or the appropriate procurement officer, according to the indicators listed below to verify that bidder made subcontracting opportunities available to a broad base of qualified subcontractors, negotiated in good faith with interested subcontractors, and did not reject any bid for unlawful discriminatory reasons.

Failure to achieve a minimum of 80 out of 100 points will render a bid non-responsive and will result in its rejection. Indicator points are awarded on a pass/fail basis, i.e., either full or zero points can be achieved for compliance with each item as set forth below:

Indicator	**Points**
1. Achievement of advisory DBE/DVBE/OBE subcontractor participation levels	No Points

2. Pre-Bid Meeting attendance	5 Points
3. Identification of sufficient subcontracting work	10 Points
4. Broad-based advertisement	10 Points
5. Written notice to subcontractors	10 Points
6. Follow-up to initial solicitations	10 Points
7. Provisions of plans specifications and requirements	10 Points
8. Request for assistance form recruitment/placement agencies	10 Points
9. Documentation of subcontractor negotiation	25 Points
10. Assistance with bonds, credit lines and insurance	10 Points
POSSIBLE TOTAL	100 Points

1. Achievement of advisory DBE/DVBE/OBE subcontractor participation levels — No Points

Failure to meet advisory DBE/DVBE/OBE subcontractor participation levels is not a basis for disqualification or determination of non-compliance with this policy.

2. Pre-Bid Meeting attendance — 5 Points

Bidder attended pre-bid meeting schedule by the City to inform all bidders of requirements for subject project. If bidder certifies in writing prior to pre-bid meeting that it was already informed of project requirements, the City may waive requirement for pre-bid meeting attendance.

Required documentation: a) Attend pre-bid meeting and be listed on attendance sheet; or b) Submit letter requesting waiver prior to pre-bid meeting.

3. Identification of sufficient subcontracting work — 10 Points

Bidder identification and selected specific work items in subject project to be performed by sub-bidders. Bidder subdivided total contract work requirements into smaller portions or quantities to permit maximum active participation.

Required documentation: Content of advertisement (Indicator 4) and written notices to subcontractors (Indicator 5) will demonstrate compliance with this objective.

4. Broad-based advertisement — 10 Points

Not less than ten (10) calendar days prior to bid submittal, bidder conducted an advertising campaign designed to reach all segments of the Columbia community by advertising in newspapers, trade association publications, special interest publications, trade journals, community papers or other media. Advertisements must be specific to the project, not generic, and may not be a plan holder advertisement provided by the publication. Advertisements shall be published on at least three (3) separate days in newspapers of general circulation; one of such newspapers shall be of daily circulation. Advertisements must be worded to ensure it does not exclude or limit potential number of potential respondents and must include:

Required documentation: Submit copies of advertisements and proof of publication dates.

5. Written notice to subcontractors — 10 Points

Not less than ten (10) calendar days prior to bid submittal, bidder provided written notice of its interest in receiving sub-bids on subject contract to DBE, DVBE, and OBE business enterprises with an interest in performance of identified work items. Contents of letters must include:

X City of Columbia=s project name;
X Name of bidder;
X Areas of work available for subcontracting;
X Contact person=s name and phone number;

X Information on availability of plans and specifications; and
X Bidder=s policy concerning assistance to subcontractors in obtaining bonds, credit lines and/or insurance.

Required documentation: Submit copy of each letter sent to subcontractors for each item of work to be performed. If only one master notification, submit letter with list of recipients. Faxed copies must include fax transmittal confirmation slip slowing date and time of transmission. Mailed letters must include copies of metered envelopes or certified mail receipts.

6. Follow-up to initial solicitations 10 Points

Bidder followed up initial solicitations of written notice to subcontractors to determine interest in specific portions of project work, answered questions, recorded phone quotes, and recorded subcontractor=s interest in bidding on any portion of subject project.

Required documentation: Submit copy of telephone logs including name of caller, name of company called, phone number, contract person, time, date, and result of conversation. Telephone logs must be submitted to demonstrate follow-up with all contractors to whom written notices were sent.

7. Provisions of plans, specifications, and requirements 10 Points

Bidder provided interested sub-bidders with access to plans, specifications, and requirements for subject project.

Required documentation: Content of advertisements (Indicator 4) and written notices to subcontractors (Indicator 5) will demonstrate compliance with this Indicator.

8. Request for assistance from recruitment/placement agencies 10 Points

Not less than fifteen (15) calendar days prior to bid submittal, bidder requested and retained assistance from agencies that recruit and place subcontractors. Other organizations and trade associations that promote subcontractor participation may also be contacted.

Required documentation: Submit copy of each letter sent to outreach agencies requesting assistance in recruiting subcontractors. Faxed copies must include fax transmittal confirmation slip showing date and time of transmission. Mailed letters must include copies of metered envelopes or certified mail receipts. Content of letters must include City of Columbia=s project name, name of bidder, and contact person=s name and phone number.

9. Documentation of subcontractor negotiation 25 Points

Bidder negotiated in good faith with interested subcontractors and has rejected no bid for other than legitimate business reasons.

Required documentation: Submit a) Copies of all subcontractor bids or quotes received; and b) Summary sheet organized by work type listing subcontractor company names with bide amounts

for each work type. Identify selected subcontractor for each work type. If bidder elects to use own forces to perform a work type, include bid to show own costs for the work.

10. Assistance with bonds, credit lines, and insurance 10 Points

Bidder made efforts to advise and assist interested subcontractors in obtaining bonds, credit lines, and insurance required for subject project.

Required documentation: Content of advertisements (Indicator 4) and written notices to subcontractors (Indicator 5) will determine compliance with this objective.

F. Contract Award

The City reserves the right to reject any and all bids. Award of contract will be to the lowest responsible bidder whose proposal complies with the city policies as determined by evaluation of submitted documentation.

G. Subcontractor Substitution

The level of listed subcontractor participation shall be maintained for duration of the contract.

1. Contractor shall request prior approval from the City contracting agency for all substitutions of subcontractors.

2. Written request shall provide name of listed subcontractor, name of replacement subcontractor, reason for substitution, work type and dollar amount.

3. The selection process for a substitute subcontractor shall be evaluated for fairness and outreach efforts.

    (a) Contractor shall submit all documentation of subcontractor outreach efforts to the Chief of the Equal Business Opportunity Office for review.

    (b) Evidence of fraud or unlawful discrimination in substitution of subcontractors will result in sanctions including assessment of penalty fines, termination of contract, or debarment.

4. Substitution of any subcontractor without the prior written approval of the City Manager shall be deemed to constitute a material breach of contract. The harm that shall accrue to the public is difficult to accurately estimate in advance. Consequently, the Contractor and the City shall jointly agree that a reasonable forecast of such damages is not less than ten (10%) percent of the subcontract price, and that the parties intend that such sum shall constitute liquidated damages as the best estimate of the harm accruing to the City.

5. This section does not replace applicable South Carolina Procurement Code provisions.

H. Falsification of Sub-Agreement

Falsification or misrepresentation of a sub-agreement as to company name, contract amount, and/or actual work performed by subcontractor will result in sanctions including assessment of penalty fines, termination of contract, or debarment.

I. Submission of Final Subcontracting Report

Contractor must submit Final Subcontracting Report to City contracting agency within fifteen (15) calendar days after final inspection of contract work. Failure to comply will result in assessment of liquidated damages.

PART 15: GENERAL SPECIFICATIONS
TABLE OF CONTENTS

Paragraph	Description	Page No.
15.1	Definitions of Terms	15-1
15.2	Laws and Regulations	15-6
15.3	Contract and Contract Documents	15-6
15.4	Required Provisions Deemed Inserted	15-6
15.5	Notice and Service Thereof	15-7
15.6	Prohibited Interests	15-7
15.7	Encroachment Permits, Rights of Way, Easements and Suspension of Work	15-7
15.8	Photographs	15-8
15.9	Video Taping of Project	15-8
15.10	Indemnity	15-9
15.11	Contract Security	15-9
15.12	Assignments	15-9
15.13	Subcontracting	15-9
15.14	Mutual Responsibility of Contractors	15-10
15.15	Separate Contracts	15-10
15.16	Contractor’s Obligation	15-10
15.17	Payments by Contractor	15-11
15.18	Contractor’s Local/Field Office	15-11
15.19	Supervision	15-12
15.20	Organization, Superintendence, Construction Progress	15-12
15.21	Inspection by Agencies	15-13
15.22	Additional Instructions and Detail Drawings	15-13
15.23	Correlation of Plans and Specifications	15-14
15.24	Ownership of Drawings	15-14
15.25	Submittals Prior to Construction	15-14
15.26	Benchmark	15-17
15.27	Materials, Services and Facilities	15-17
15.28	"Or Equal" (Substitute Materials)	15-18
15.29	Standard Products and Materials Not Specified	15-19
15.30	Product Data	15-20
15.31	Samples	15-20
15.32	Patents	15-20
15.33	Delivery, Storage, and Handling	15-21
15.34	Contractor’s Title to Materials	15-21
15.35	Inspection and Testing Materials, Quality and Guarantees	15-21
15.36	Material Testing	15-23
15.37	Experience of Manufacturer	15-26
15.38	Completed Portions of Work	15-26
15.39	Changes in Work	15-26
15.40	Claims for Extra Work	15-27
15.41	Estimated Quantities of Work	15-27
15.42	Time for Completion; Liquidated Damages and No Damages for Delays	15-27
15.43	Construction Schedule and Periodic Estimates	15-28
15.44	Procedures for Submitting Pay Requests	15-29

15.45	Acceptance of Work, Final Payment and Closeout Procedures	15-32
15.46	Record Drawing	15-34
15.47	Acceptance of Final Payment as Release	15-34
15.48	General Warranty for Three Years After Completion of Contract	15-35
15.49	Right of City to Terminate Contract	15-35
15.50	Termination for Convenience and Suspension of Work	15-35
15.51	Reporting on Job Retention and Creation	15-36
15.52	Wages and Overtime Computation	15-37
15.53	Protection of Material, Work and Property, and Injuries to Persons and Property	15-38
15.54	Safety Regulations	15-39
15.55	Protection of Employees' Lives and Health	15-39
15.56	Weather Conditions and Emergency	15-40
15.57	Mobilization	15-40
15.58	Surveys, Lines, Grades, Stakes and Templates	15-41
15.59	Clean Up and Restoration	15-41
15.60	Use of Explosives	15-42
15.61	Sediment and Erosion Control	15-43
15.62	Construction Near or Under Drainage Pipes, Sewers, & Ditches	15-43
15.63	Unclassified Excavation/ Geotechnical Investigation	15-43
15.64	Excavation and Trench Stabilization	15-44
15.65	Dewatering	15-45
15.66	Backfilling	15-45
15.67	Flowable Fill	15-46
15.68	Maintenance of Traffic	15-47
15.69	Access Roads	15-48
15.70	Ingress and Egress to Public or Private Premises	15-49
15.71	Rights-of-Ways and Easement Clearing	15-49
15.72	Existing Utilities and Structures	15-51
15.73	Interruption of Service	15-52
15.74	Conflicts with and Relocation of Existing Utilities	15-52
15.75	Ordinance Relating to Utility Lines in Streets	15-52
15.76	Replacing Shoulder Material	15-56
15.77	Asphalt Paving, Repairing and/or Resurfacing Roadways	15-56
15.78	Removing, Milling and Disposing of Asphalt Pavement	15-57
15.79	Remove and Replace Concrete and Asphalt Drives	15-57
15.80	Concrete Curb and Gutter and Concrete Sidewalks	15-58
15.81	Pavement Markings	15-58
15.82	Protection of Tree Root Zones Within Street Right-Of-Way	15-59
15.83	Re-establishment of Property Irons	15-64

CITY OF COLUMBIA REGULATIONS
PART 15
GENERAL SPECIFICATIONS

15.1 DEFINITIONS OF TERMS

15.1.1 Whenever in these specifications and in the contract, or any documents or instruments pertaining to construction where these specifications govern the following terms are used, the intent and meaning shall be interpreted as follows:

15.1.1.1 A.A.S.H.T.O. - American Association of State Highway and Transportation Officials.

15.1.1.2 A.D.A. - Americans with Disabilities Act of 1990

15.1.1.3 A.N.S.I. - American National Standards Institute.

15.1.1.4 A.S.T.M. - American Society for Testing Materials.

15.1.1.5 A.W.W.A. - American Water Works Association.

15.1.2 Advertisement for Bids – The notice calling attention of bidders to the time and place for receiving bids, containing a brief description of the work and briefly setting forth the requirements and conditions for submission of proposals.

15.1.3 Bid Bond – The security to be furnished by the bidder as a guaranty of good faith that he will enter into a contract with the City and to execute the required bond covering the work contemplated, if same is awarded to him.

15.1.4 Bidder – Any individual, partnership, firm or corporation acting directly or through a duly authorized representative, submitting a proposal for the work contemplated.

15.1.5 Bridges – Water-way structures having a clear span in excess of 12 feet.

15.1.6 City – The City, as owner of the project, acting through its authorized representatives.

15.1.7 Council – The duly elected Council of the City.

15.1.8 Contract – The written agreement covering the performance of the work. The contract shall include the Proposal, Plans, Specifications, Special Provisions, Work Order, Contract Bond, Insurance Certificates, Addenda and all other documents pertinent to the contract. It shall also include any and all supplemental, signed, written agreements duly authorized by the owner which may be executed to complete the work, in accordance with the intent of the plans and specifications, in an acceptable manner.

15.1.9 Contract Period – The period from the date specified in the contract for the commencement of work to the date specified for its completion, both dates, inclusive.

15.1.10 Contract Sum – The aggregate sum obtained by multiplying the number of units of each class of work, as shown on the contract, by the unit prices specified in the contract for the class of work.

15.1.11 Contractor – The individual, partnership, firm or corporation executing a contract acting directly or through his lawful agents or employees, who is primarily liable for the acceptable performance of the work for which he was contracted and also for the payment of all legal debts pertaining to the work.

15.1.12 Contractor-(Sub) – Any person, firm, or corporation who has, with the approval of the Engineer, contracted with the Contractor to execute and perform in his stead all or part of the contract.

15.1.13 Design Engineer – The representative of the City directly in charge of the work.

15.1.14 Drainage – Drainage is the system of pipes, drainageways, ditches, and structures by which surface or subsurface waters are collected and conducted from the streets, alleys, or adjacent properties.

15.1.15 Employee – Any person working on the project to which these specifications apply, and who is under the direction or control of, or receives compensation from the Contractor or sub-contractor.

15.1.16 Engineer - City Engineer or his duly authorized representative.

15.1.17 Equipment – All machinery, together with the necessary supplies for upkeep and maintenance and also all tools and apparatus necessary for the proper construction and acceptable completion of the work.

15.1.18 Extra Work – Work performed by the Contractor, authorized by formal Change Order signed by the City Engineer, in order to complete the contract in an acceptable manner but for which there is no basis of payment provided in the contract.

15.1.19 Inspector – An authorized representative of the Engineer assigned to make all necessary inspection of the work performed or being performed, or for the materials furnished or being furnished by the Contractor.

15.1.20 Intention of Terms – Whenever, in these specifications or upon the plans the words “directed”, “required”, “permitted”, “ordered”, “prescribed”, “designed”, or words of like import are used, it shall be understood that the direction, requirement, permission, order, designation, or prescription of the Engineer is intended and similarly, the words “approved”, “acceptable”, “satisfactory”, or words of like import, shall mean approved by, or acceptable to or satisfactory to the Engineer subject in each to the final determination of the City Manager.

15.1.20.1 Any reference to a paragraph of sub-paragraph within a section shall include the general provisions of the section or sections and paragraph pertinent thereto.

15.1.21 Instructions to Bidders – The clauses setting forth, in detail, the information relative to the proposed work and requirements for the submission of Proposals.

15.1.22 Item – A specified class of work on which definite prices are set forth in the proposal or in the contract.

15.1.23 Laboratory – The official testing laboratories of the City or such other laboratories as may be designated by the Engineer.

15.1.24 Landscaping – The planning, planting, establishing and caring for trees, shrubs, vines and other vegetation to provide shade, reduce dust, control erosion or improve the general appearance of the project.

15.1.25 Lump Sum – Total price for an item or items of work regardless of the number of units of work to be performed.

15.1.26 Maximum Density and Optimum Moisture Content – The term "maximum density" as applied to the compaction of soils an similar materials shall be construed as the greatest density obtainable from the material passing a ¾+" mesh sieve when it is compacted in the manner prescribed in current A.A.S.H.O. Method of Test 5-90 or the current Standard Proctor Method. Optimum moisture content shall be construed as the percentage of moisture corresponding to the maximum density in the above described test.

15.1.27 Notice of Award – A written notice to the successful bidder stating that his bid has been accepted and that, in accordance with the terms of the Advertisement for Bids and Specifications, he is required to execute the contract and furnish satisfactory contract bond.

15.1.28 Notice to Proceed – A written notice to the Contractor of the date on which he is to begin the prosecution of the work for which he has contracted.

15.1.29 Or Equal" Clause – "Or equal" shall be construed to mean that material or equipment will be acceptable only when, in the judgment of the Engineer, they are composed of parts of equal quality, or equal workmanship and finish, designed and constructed to perform or accomplish the desired result as efficiently as the indicated brand, pattern, grade, class, make of model. Written approval will be obtained from the Engineer prior to installation.

15.1.30 O.S.H.A. - Occupational Safety and Health Act.

15.1.31 Official Publications – The official publications and the formal resolutions and notices relative to the proposed improvements that are required by law to be published in a prescribed manner and that have actually been published in accordance with the statues relating thereto. Attention is directed to the fact that these official publications are by statute vested with all of the force and effect of contract obligations.

15.1.32 Owner – The owner is any public agency which, through its authorized representatives and governing body, has authorized the project and can by their own acts bind the City in the accompanying contract.

15.1.33 Performance and Payment Bond – The approved form of security furnished by the Contractor and his Surety as a guarantee of good faith and ability on the part f the

Contractor to execute the work in accordance with the terms of the plans, specifications and contract, and the payment of all debt pertaining to the work and the maintenance of the work as provided by law of by these specifications.

15.1.34 Plans – The official plans, working drawings or supplemental drawings or exact reproductions thereof, approved by the City, official copies of which are on file in the Department of Utilities and Engineering and which show the location, character, dimensions, and detail of the work to be done and which are to be considered as part f the contract, supplementary to these specifications.

15.1.35 Project – A project for the accomplishment of the improvement of certain municipal streets, alleys, sewers, data, etc., based on a program of improvement adopted by the City Council.

15.1.36 Proposal – The written offer of the bidder, when submitted on the approved Proposal Form, to perform the contemplated work and furnish the necessary materials in accordance with the provision of the plans and these specifications.

15.1.37 Proposal Form – The approved form on which the written offer of formal bid is to be prepared and submitted for the construction to be done.

15.1.38 Public Agency – Public agency means a Municipality or other political subdivision; or a tax-supported organization.

15.1.39 Right-of-way – All lands or other property interests provided or acquired for the construction of the improvement and its appurtenances.

15.1.40 Roadbed – The area between the inside slopes of ditches or tops of fills slopes.

15.1.41 Roadway – The part of the right-of-way included between the outside lines of the slopes, gutters and side ditches of the road.

15.1.42 S.C.D.O.T. – South Carolina Department of Transportation

15.1.43 Shoulders – That portion of the road, street, or alley lying outside of the surfaced areas.

15.1.44 Sodding – The transplanting of established turf in the form of blocks or strips usually referred to as “sods”.

15.1.45 Special Provisions – The specific clauses setting of the conditions or requirements peculiar to the project under consideration, covering work or material involved in the Proposal and estimate, which are not thoroughly or satisfactorily stipulated in these specifications.

15.1.46 Specifications – The directions, provisions, and requirements contained herein, supplemented by special provisions, pertaining to the method and manner of performing the work, or to the quantities, or the qualities of materials to be furnished under the contract.

15.1.47 Station – One hundred (100) lineal feet.

15.1.48 Structures – As used in these specifications, structures shall mean culverts, including headwalls and endwalls, drainage construction such as storm sewers, gutters, catch basins, drop inlets, manholes, retaining walls and other construction which may be encountered in the building of the improvements.

15.1.49 Sub-grade – That portion of the road, street or alley upon which the base-course is to be placed.

15.1.50 Superintendent – The executive representative for the Contractor present on the work site at all times during progress, authorized to receive and fulfill instruction from the Engineer and capable of superintending the work efficiently.

15.1.51 Supplemental Agreement – A written Proposal and Agreement executed by the Contractor and by the City, with the consent of the Contractor's Surety covering work not included in the Plans and Proposal which is necessary to the proper completion of the project.

15.1.52 Surety – The corporate body or individuals which are bound by the contract bond and the payment bond with and for the Contractor, and which engage to be responsible for the entire and satisfactory fulfillment of the contract and for the payment of all lawful debts incurred in fulfilling the contract.

15.1.53 Surfacing – The combined subbase, base and surface course of pavement shall be considered as a single unit, excluding shoulders, unless otherwise denoted.

15.1.54 The Work – All work including the furnishing of materials, tools, equipment, incidentals, etc., to be performed by the Contractor under the terms of the contract, plans and specifications.

15.1.55 Turf – The mass of matter, roots, of grass and certain other low-growing plants, including the layer of soil in which they are growing and the plant growth showing above. The density and quality of the turf mat will be influenced by the environmental conditions and service requirements, but in general maximum coverage with a minimum yield is desired, as distinct from agricultural productions.

15.1.56 Turfing – The process involved in the planting and development of turf, including preparation and improvement of soil, sowing, or planting, cultural practices and other operations necessary to its establishment and maintenance.

15.1.57 Working Day – A working day shall be any day other than a legal holiday or Sunday. Sundays or holidays on which the Contractor's forces engage in regular work, requiring the presence of an inspector, will be considered as working days.

15.1.58 Working Time – The working time, stated in the Proposal and the contract, shall be given as a definite number of working days or as the date by which all work shall be completed as an essential part of the contract. When the notice to Contractors and Proposal form set forth the date of commencement and date of completion, then the contract period shall be the period from the specified date for beginning the work, to the specified date of completion, both dates inclusive. The

contract period may be extended by the City as provided in these specifications, in which event the contract period includes the new date of completion.

15.2 LAWS AND REGULATIONS

15.2.1 The Contractor shall keep himself fully informed of all Federal, State, City and County laws, ordinances and regulation in any manner affecting those engaged or employed in the work, or the materials used in the work, and of all orders and decrees of bodies or tribunals having any jurisdiction or authority over same. If any discrepancy or inconsistency is discovered in this contract, or in the drawings or specifications herein referred to, in relation to any such laws, ordinances, regulation, order or decree, he shall immediately report the same in writing to the City. He shall at all times observe and comply with all such existing and future laws, ordinances, and regulations, and shall protect the surety, the City and their agents against any claims or liability arising from or based on the violation of any such law, ordinance, regulation, order or decree, whether by himself or by his employees.

15.3 CONTRACT AND CONTRACT DOCUMENTS

15.3.1 The instructions to bidders, contractor's bid, plans, specifications and addenda shall form part of this contract and the provisions thereof shall be as binding upon the parties hereto as if they were herein fully set forth. The tables of contents, titles, headings, running headlines and marginal notes contained herein and in said documents are solely to facilitate reference to various provisions of the contract documents and in no way affect, limit or cast light on the interpretation of the provisions to which they refer.

15.3.2 Projects shall be constructed in accordance with the references made in the Contract Documents, Plans, Specifications and/or Special Provisions; however, payment shall be made as shown in the Bid Form included in the Contract Documents. Reference to any standards, specifications, manuals, and/or test designations of the American Society for Testing Materials, the American Association of State Highway and Transportation Officials, Federal Specifications, South Carolina Department of Transportation, the City of Columbia, County or any other recognized national organization shall mean it is all inclusive and shall be the current version in effect at the time the Contract is bid whether it is identified by a number and/or year of adoption. "All inclusive" shall mean to include all supplemental specifications, amendments and any other addenda associated with the standards, specifications and manual or test designation. Reference to the "Department" or "SCDOT" in the South Carolina Department of Transportation Specifications shall be changed to "Owner/Engineer" unless otherwise noted.

15.4 REQUIRED PROVISIONS DEEMED INSERTED

15.4.1 Each and every provision of law or clause required by law to be inserted in this contract shall be deemed to be inserted herein, and the contract shall be read and enforced as though it were included herein. If through mistake or otherwise any such provision is not inserted, or is not correctly inserted, then upon the

application of either party the contract shall be amended to make such insertion or correction.

15.5 NOTICE AND SERVICE THEREOF

15.5.1 All notices herein provided shall be considered as having been given upon being placed in the United States Mail, certified, postage prepaid, addressed to the contractor at the address herein set forth in the contract documents or to such other address as may be given to the City in writing.

15.5.2 All notices required to be delivered to the City shall, unless otherwise specified in writing to the Contractor, be delivered to the City Engineer, City of Columbia, Columbia, South Carolina, and any notice to or demand upon the City shall be sufficiently given if delivered to the office of said City Engineer, or if deposited in the United States Mail, certified, postage prepaid, in each case addressed to said City Engineer of the City of Columbia, South Carolina, unless otherwise specified in writing to the contractor by the City Engineer.

15.6 PROHIBITED INTERESTS

15.6.1 No official of the City, who is authorized in such capacity and on behalf of the City to negotiate, make, accept, approve, or to take part in negotiating, making, accepting, or approving any architectural, engineering, inspection, construction or material supply contract or ay subcontract in connection with the construction of the project, shall become directly or indirectly interested personally in this contract or in any part hereof. No officer, employee, architect, attorney, engineer, or inspector of or for the City, who is authorized in such capacity, and on behalf of the City to exercise any legislative, executive, supervisory or other similar functions in connection with the construction of the project, shall become directly or indirectly interested personally in this contract or in any part thereof, any material supply contract, subcontract, insurance contract, or any contract pertaining to the project.

15.6.2 The City shall, at its sole option and discretion, have the right to terminate this contract for any reason whatsoever by providing the Contractor with a notice of termination to be sent by registered mail, return receipt requested. A termination for default under Section 29.0 of this contract shall, if wrongfully made, be treated as a termination for convenience under this clause. Whenever the Contractor is terminated for convenience under this clause or is wrongfully terminated under any other clause of this contract, the Contractor shall only be entitled to the actual direct costs of all labor and material expended on the job prior to the effective date of the termination plus 15% or the Contractor shall be entitled to be paid a pro-rate percentage of the total contract price which is equal to its percent of completion, whichever of the two methods provides the lowest sum to be paid to the Contractor. In no event shall the Contractor be entitled to anticipatory profit or damages for any termination under this clause. In no event shall the Contractor be entitled to assert a claim in quantum meruit or any other measure of damages other than that stated herein.

15.7 ENCROACHMENT PERMITS, RIGHTS-OF-WAY, EASEMENTS AND SUSPENSION OF WORK

15.7.1 The City shall furnish all necessary permits, land and rights-of-way necessary for the carrying out of this contract and the completion of the work herein contemplated, and will use due diligence in acquiring said encroachment permits, land and right-of-way as speedily as possible with the exception of obtaining additional temporary construction easements that the Contractor deems necessary in the performance of the contract. It is possible that all encroachment permits, lands and rights-of-way may not be obtained as herein contemplated before construction begins, in which event the Contractor shall begin his work upon such land and rights-of-way as the City may have previously acquired, and no claim for damages whatsoever will be allowed by reason of the delay in obtaining the remaining lands and right-of-way. Should the City be prevented or enjoined from proceeding with the work, or from authorizing its prosecution, either before or after the commencement, by reason of any litigation or by reason of its ability to procure any lands or rights-of-way for said work, the contractor shall not be entitled to make or assert claim for damage by reason of said delay or to withdraw from the contract except by consent of the City; but time for completion of the work will be extended to such time as the City determines, such determination to be set forth in writing.

15.7.2 In the event the Contractor obtains permissions for temporary easements, copies of all documents shall be submitted to the Engineer for approval and filing.

15.7.3 There will be no separate payment for these requirements. All cost for this work shall be included in other bid items.

15.8 PHOTOGRAPHS

15.8.1 The contractor will be responsible for obtaining photographs in and adjacent to the construction area prior to beginning construction. The back of each photograph shall be annotated with the date, location (approximate station number), and direction of view (i.e., "looking north", etc.). There is no direct payment for this item, the cost of which shall be included in other bid items.

15.9 VIDEO TAPING OF PROJECT

15.9.1 The contractor shall video tape the entire project route, with an Engineer's representative in attendance, **prior to the start of construction**. The Engineer must be given 48 hours prior notice. Audio will be included on the tape with the property being videoed identified by tax map number and street address. It is VERY IMPORTANT that the Contractor thoroughly documents the preexisting conditions of any and all roads, walkways, and parking lots which he will utilize including those used for access outside area of construction. A copy of this video will be given to the Engineer immediately following taping/copying.

15.9.2 **At the completion of the project** the contractor shall repeat the above requirement.

15.9.3 These video tapes are to protect the contractor from undue claims. If ANY situation arises where a claim is made by a party for damages by the Contractor, the Contractor must have documented prior evidence to the contrary or the City must side with the party making such claims, regardless if condition was pre-

existing or not.

15.9.4 There is no direct payment for this item, the cost of which shall be included in other bid items.

15.10 INDEMNITY

15.10.1 The Contractor agrees to and fully indemnify, defend, hold harmless and reimburse the Owner, the Engineer and their respective agents, employees and successors from and against any and all losses, liabilities, judgments, expenses, costs and all claims for damages of any nature whatsoever:

- relating to or arising out of any action or failure to act; or,
- resulting from a taking of property, real or personal, or by inverse condemnation; or,
- relating to or arising out of the performance or failure to perform any of the obligations required by the contract; or,
- resulting from failure to comply with or violation of any local, state or federal regulation

by the Contractor, its subcontractors, officers, agents and employees or **for anyone for whose acts any of them may be liable for**. Losses, liabilities, expenses and claims for damages shall include, but not limited to, civil and criminal fines and penalties, judgments, loss of use and/or services, bodily injury, injury to or the taking of real or personal property, defense costs and attorney's fees.

15.11 CONTRACT SECURITY

15.11.1 The Contractor shall furnish a performance and payment bond in an amount at least equal to one hundred (100) percent of the contract prices as security for the faithful performance of this contract, as security for the payment of all persons performing labor on the project under this contract and furnishing materials in connection with the contract. The performance bond and payment bond may be in one or in separate instruments in accordance with local law. Before final acceptance, each bond must be approved by the City.

15.12 ASSIGNMENTS

15.12.1 The Contractor shall not assign the whole or any part of this contract or any money due or to become due hereunder without written consent of the City. In case the Contractor assigns all or any part of any moneys due or to become due under this contract, the instrument of assignment shall contain a clause substantially to the effect that it is agreed that the right of the assignee in and to any moneys due or to become due to the Contractor shall be subject to prior claims of all persons, firms and corporations for services rendered or materials supplied for the performance of the work called for in this contract.

15.13 SUBCONTRACTING

15.13.1 The Contractor may utilize the services of specialty subcontractors on those parts of the work which under normal contracting practices are performed by specialty subcontractors.

15.13.2 The Contractor shall not award any work to any subcontractor without prior written approval of the City, which approval will not be given until the Contractor submits to the City a written statement concerning the proposed award to the subcontractor, which statement shall contain such information as the City may require.

15.13.3 The Contractor shall be as fully responsible to the City for the acts and omissions of his subcontractors, and of persons either directly or indirectly employed by them, as he is for the acts and omissions of persons directly employed by him.

15.13.4 The Contractor shall cause appropriate provisions to be inserted in all subcontracts relative to the work to bind subcontractors to the Contractor by the terms of the General Specifications and other contract documents insofar as applicable to the work of subcontractors and to give the contractor the same power as regards terminating any subcontractor that the City may exercise over the Contractor under any provisions of the contract documents.

15.13.5 Nothing contained in this contract shall serve to create any contractual relationship between any subcontractor and the City.

15.14 MUTUAL RESPONSIBILITY OF CONTRACTORS

15.14.1 If through acts of neglect on the part of the Contractor, any other contractor or any subcontractor shall suffer loss or damage on the work, the Contractor agrees to settle with such other contractor or subcontractor by agreement or arbitration if such other contractor or subcontractor will so settle. If such other contractor or subcontractor shall assert any claim against the City on account of any damage alleged to have been sustained, the City shall notify the Contractor, who shall indemnify and save harmless the City against any such claim.

15.15 SEPARATE CONTRACTS

15.15.1 The contractor shall coordinate his operations with those of other contractors. Cooperation will be required in the arrangement for the storage of materials and in the detailed execution of the work. The Contractor, including his subcontractor, shall keep informed of the progress and the detail work of other contractors and shall notify the Engineer immediately of lack of progress or defective workmanship on the part of other contractors. Failure of a contractor to give notice of lack of progress or defective workmanship by others shall be construed as acceptance by him of the status of the work as being satisfactory for proper coordination with his own work.

15.16 CONTRACTOR'S OBLIGATION

15.16.1 **The Contractor shall have the sole responsibility of determining the best and proper method or means of construction and the Owner or the Engineer acting in behalf of the Owner shall not be held responsible for determining or suggesting a method or means of construction, except as expressly indicated in the contract documents.**

15.16.2 The Contractor shall, in good workmanlike manner, do and perform all work and furnish all supplies and materials, machinery, equipment, facilities and means, except as herein otherwise expressly specified, necessary or proper to perform and complete all the work required by this contract, within the time herein specified, in accordance with the provisions of this contract and said specifications, and in accordance with the plans and drawings covered by this contract and any and all supplemental plans an drawings, and in accordance with the directions of the Engineer as given from time to time during the progress of the work. He shall furnish, erect, maintain, and remove such construction plant and such temporary works as may be required. The Contractor shall observe, comply with, and be subject to all terms, conditions, requirements and limitations of the contract and specifications, and shall do, carry on, and complete the entire work to the satisfaction of the Engineer and the City.

15.16.3 The Contractor will at all times have one complete set of all contract documents (special provisions, specifications, drawings, bulletins, etc.) maintained at the project sites and the Contractor's person in charge must be familiar with all phases of the project.

15.16.4 The Contractor agrees to personally see to the execution of the contract and not to sublet any portion of the same without the consent, in writing, of the City. The Contractor shall be responsible for the faithful completion of that part of the work. The subletting will not release the Contractor from any of his obligations or requirements under this contract.

15.16.5 The Contractor shall immediately remove and reconstruct or replace, at his own expense, all work or materials not in accordance with this contract. The payment of estimates, including certain work or materials, shall not be considered as an acceptance of that work or those materials at any time before the final acceptance of the entire work and materials included in the contract.

15.17 PAYMENTS BY CONTRACTOR

15.17.1 The Contractor shall pay for the following:

15.17.1.1 For all transportation and utility services not later than the twentieth (20) day of the calendar month following that in which services are rendered;

15.17.1.2 For all materials, tools, and other expendable equipment to the extent of ninety (90) percent of the cost thereof not later than the twentieth (20) day of the calendar month following that in which such materials, tools, and equipment are delivered at the site of the project, and the balance of the cost thereof not later than the thirtieth (30) day following the completion of that part of the work in or on which such materials, tools, and equipment are incorporated or used; and

15.17.1.3 To each of his subcontractors not later than the fifth (5) day following each payment to the Contractor, the respective amounts allowed the Contractor on account of the work performed by his subcontractors to the extent of each subcontractor’s interest therein.

15.18 CONTRACTOR’S LOCAL/FIELD OFFICE

15.18.1 The Contractor shall maintain a field office, with telephone, in the general area of the work, and will be required to have a responsible representative on call at all times.

15.18.2 Should the Contractor so desire, he may build shanties or provide other structures for housing men, tools, machinery and supplies, but they will only be permitted at approved places, and their surroundings shall be maintained at all times in a sanitary and satisfactory manner. On or before the completion of the work, all such structures shall be removed, together with all rubbish and trash, at the expense of the Contractor.

15.18.3 Upon completion of the contract, the Contractor shall remove the field office and all such temporary facilities from the site and leave the premises in a condition acceptable to the City Inspector. In the event the Contractor leases or rents office space for the field office, the Contractor shall vacate the rented or leased space in a condition acceptable to the property owner.

15.19 SUPERVISION

15.19.1 The work shall be conducted under the general direction of the Engineer and will be inspected by inspectors appointed by him. However, in no case will the Engineer or Inspector be responsible for the supervision of the work. The inspectors will keep a record of work done and see that the location and limit marks are kept in proper order. The presence of an inspector shall not relieve the Contractor of responsibility for the proper execution of the work.

15.19.2 The Contractor shall furnish at his own expense such labor, organization and materials as may be reasonably necessary in inspecting and supervising the work. Should the Contractor refuse, neglect, or delay compliance with this requirement, the specified facilities may be furnished and maintained by the City and the cost thereof deducted from any amounts due, or to become due the Contractor.

15.19.3 Unless otherwise provided for in these specifications, all expense of inspection will be borne by the Contractor.

15.19.4 It is understood that any instruction or decision given by the Engineer is to be considered the instruction or decision of the City, where, under the terms of this contract, such decision rests with the Engineer.

15.19.5 The work shall be entirely under the control of the Engineer, and he, or his authorized representative, shall have access to same at all times. The Engineer may require the Contractor to dismiss any employee he deems to be incompetent or careless.

15.20 ORGANIZATION, SUPERINTENDENCE, CONSTRUCTION PROGRESS

15.20.1 The Contractor shall employ only competent, experienced and skilled foremen and personnel in charge of their particular class of work. The Contractor shall give his personal superintendence to the work or shall have a competent superintendent or foreman present at all times when the work is in progress who shall have full authority to act for the Contractor. Whenever the Contractor is

absent from any part of the work, the Superintendent or Foreman in charge of that particular work shall receive and execute the instructions of the Engineer. It is understood that such representative shall be acceptable to the Engineer and shall be one who can be continued in that capacity for the particular job involved unless he ceases to be on the Contractor's payroll.

15.20.2 The Contractor shall, upon request of the Engineer, immediately remove any Superintendent, Foreman or employee considered by the Engineer to be incompetent or disorderly.

15.20.3 The Contractor shall employ an ample force of properly experienced workers and provide construction equipment properly adapted to the work, of sufficient capacity and efficiency to accomplish the work in a safe and workmanlike manner, at a rate of progress satisfactory to the City. The equipment shall be maintained in a good working order and provision shall be made for immediate emergency repairs. No reduction in the capacity of the equipment employed on the work shall be made that negatively impacts the rate of the work. The measure of the capacity of the equipment and work force shall be its actual performance on the work to which these specifications apply. Award of this contract shall not be construed as a guaranty by the City that the equipment and work force listed by the Contractor for use on this contract is adequate for the performance of the work.

15.20.4 Should the Contractor fail to maintain a rate of progress which, in the opinion of the City, will complete work within the time limit specified, the City may require that additional work forces be added, if necessary, during additional periods or shifts, or additional equipment, or both, be placed on the work, or a reorganization of work forces and/or equipment be effected in order that the progress of the work be brought up to schedule and so maintained. Should the Contractor refuse or neglect to increase the number of workers, working period, and/or equipment, or to reorganize the sequencing of the work in the manner satisfactory to the City, the latter may proceed under the provisions of the contract to rectify the conditions.

15.21 INSPECTION BY AGENCIES

15.21.1 The representatives of the South Carolina Department of Health and Environmental Control and certain Local, State and Federal agencies shall have access to the work wherever it is, in preparation or progress, and the Contractor shall provide proper facilities for such access and inspection. Upon contractor's request, the City Engineer's office will enumerate those agencies that shall have access to the work.

15.22 ADDITIONAL INSTRUCTIONS AND DETAIL DRAWINGS

15.22.1 The Contractor will be furnished additional instructions and detail drawings as necessary to carry out the work included in the contract. The additional drawings and instructions thus supplied to the Contractor will coordinate with the contract documents and will be so prepared that they can be reasonably interpreted as part thereof. The Contractor shall carry on the work in accordance with the additional detail drawings and instructions. The Contractor and the Engineer will prepare

jointly: (a) a schedule fixing the dates at which special detail drawings will be required, such drawings, if any to be furnished by the Engineer in accordance with said schedule, and (b) a schedule fixing the respective dates for the submission of shop drawings, the beginning of manufacture, testing and installation of materials, supplies and equipment, and the completion of the various parts of the work; each such schedule to be subject to change from time to time in accordance with the progress of the work.

15.23 CORRELATION OF PLANS AND SPECIFICATIONS

15.23.1 The contract, plans and specifications are to interpreted as mutually explanatory or supplementary, and therefore any features shown in one and not in the other shall have the same force and effect as if shown in both, and shall be fully executed. Prior to execution of the work, the Contractor shall check all drawings and specifications, and shall immediately report all errors, discrepancies, conflicts and omissions discovered therein to the Engineer. All such errors, discrepancies, conflicts, and omissions will be adjusted by the Engineer, and adjustment by the Contractor without prior approval shall be at his own risk. The settlement of any complication arising from such adjustments shall be made by the Contractor at his own expense and to the satisfaction of the City.

15.24 OWNERSHIP OF DRAWINGS

15.24.1 All drawings, specifications, and memoranda relating to the work are the property of the City and are to be carefully used and returned to the City at completion, or cessation of the work for any cause.

15.24.2 Contract Documents to be Furnished: Five (5) sets of the plans and specifications will be furnished to the Contractor without charge. Additional sets can be secured from the Engineer upon request at cost of reproduction. The Contractor shall have available on the project site at all times one (1) copy of each of said plans and specifications.

15.25 SUBMITTALS PRIOR TO CONSTRUCTION

15.25.1 At the Preconstruction Meeting, the Contractor shall provide schedules and submittals that are required in the Contract Documents including, but not limited, to the following:

15.25.1.1 Construction progress and sequencing schedules: The Contractor shall deliver to the City an estimated construction progress and sequencing schedule in form satisfactory to the City. It shall show the proposed dates of commencement and completion of each of the various subdivisions of work required under the contract documents along with the order and/or sequencing of the work.

15.25.1.2 Construction meeting dates, times and location

15.25.1.3 Names of certified testers, plants, laboratories, and/or licenses

15.25.1.4 Names and contact information of responsible persons

15.25.1.5 Material testing procedures and schedules

15.25.1.6 Complete preliminary schedules for shop drawings, product data, and samples including a list of each required submittal and the times for submitting, reviewing, and processing each submittal

15.25.1.7 Equipment delivery schedule – The Contractor shall prepare a schedule of anticipated shipping dates for materials and equipment. It is intended that equipment and materials be so scheduled as to arrive at the job site just prior to time for installation to prevent excessive materials on hand for inventory and the necessity for extensive storage facilities at the job site.

15.25.1.8 Payroll schedule

15.25.1.9 The Contractor shall also furnish a schedule of values for all work with a detailed estimate and a complete breakdown of the contract price; and periodic itemized estimates of work done that shall be used as a basis for the Contractor's applications for payment. The costs employed in making up any of these schedules will be used only for determining the basis of partial payments and will not be considered as fixing a basis for additions to or deductions from the contract price. The sum of all values listed in the schedule shall not exceed the total contract sum.

15.25.2 The Contractor shall provide copies of photographs and videotapes taken of the extents of the project prior to the start of all demolition and construction work to document existing conditions. Photographs shall include a description of the view including, but not limited to, the location, direction, etc.

15.25.3 Shop drawings and Submittals: Prior to the beginning of construction, the Contractor shall submit (4) copies of each submittal and/or shop drawing for the City of Columbia's use; Contractor shall provide additional copies as needed for their records. Submittal and shop drawing review shall be limited to general design requirements only and shall not relieve the Contractor from responsibility for errors and/or omissions or responsibility for resulting consequences due to deviations from the Contract Documents. Changes shall not be made to any submittal after it has been reviewed; a new submittal must be presented for review and approval if changes are requested.

15.25.3.1 Shop drawings and/or submittals shall include the information listed below:

15.25.3.1.1 Project Name as shown on the Contract Document Cover.

15.25.3.1.2 Prime Contractor and Applicable Subcontractor.

15.25.3.1.3 Name of Engineer of Record.

15.25.3.1.4 Owner's Name.

15.25.3.1.5 Applicable Specification and Drawings Reference.

15.25.3.1.6 A stamp signed and dated by the Contractor stating that the Contractor has checked the materials and/or equipment for conformance with the Contract Documents, plans and specifications and that the Contractor has satisfied the Contractor's obligations under the Contract Documents.

15.25.3.1.7 A place for the Engineer to stamp.

15.25.3.2 Submittals that do not comply with the requirements listed above may be returned to the Contractor for re-submittal. Submittals that are acceptable will be reviewed and returned with comments/notes to the contractor not later than 15 working days after receipt by the City of Columbia. The need for re-submittals will not be a basis for an extension of contract time for the Contractor.

15.25.3.3 The inclusion of the Contractor's signature and date on the submittals and shop drawings warrants that the Contractor has determined and verified that all product identification, field measurements, quantities, applicable standards, specified performance and design criteria, construction criteria, installation requirements, relation to adjacent or critical features of the work or materials, catalog numbers and all other data have been checked and meet the requirements of the Contract Documents. Additionally, the Contractor is verifying that catalog data, manufacturer's technical data and/or shop drawings show complete information on material composition, test results, physical properties, dimensions, diagrams, procedures, methodology, performance curves, schedules, templates, patterns, calculations, instructions, etc. and that all are suitable with respect to their intended use, fabrication, shipping, handling, storage, assembly and installation per the Contract Documents. Product data includes standard printed information on materials, products, and systems. Manufacturer's standard printed recommendations shall include application and use of all products, compliance with standards, labels and seals, verification of field measurements, special coordination requirements, catalog data and manufacturer's technical data complete with material composition, physical properties, and dimensions of all material used during the course of the project. The product data shall also include the manufacturer's recommendations for the handling and storage of materials and repair of damaged materials. Required data shall be collected into one submittal for each unit of work or system and **each copy shall be marked to show which choices and options are applicable to the project.**

15.25.3.4 **Materials and items installed in the work that have not been approved through the submittal and/or shop drawing process shall be removed and an approved product shall be installed and/or constructed at the Contractor's expense.** Review and approval of submittals will not extend to, nor does it in any way relieve the Contractor of Contractor's responsibilities for means, methods, techniques, sequences and procedures of construction, and safety precautions and programs incident to performing the work unless such is specifically and expressly called for by the Contract Documents.

15.25.3.5 Contractor shall give specific written notice of any variations from the Contract Documents on all submittals. This notice shall be both a written communication separate from the shop drawing and/or submittal; and, in addition, by a specific

notation made on each shop drawing or submittal for review and approval of each such variation.

15.25.3.6 The Contractor shall attach current documentation, certifications, the current Approval List published by SCDOT, etc. to appropriate submittals for review and approval by the Engineer. Submittals are required for Contractors, plants, materials, etc. that are required to be certified and/or approved by the South Carolina Department of Transportation (SCDOT). Failure of the Contractor to attach the proper documentation to the submittals may result in delays of reviews and approvals.

15.25.3.7 The Contractor shall be responsible for providing updated certifications/approvals prior to expiration of such. Uncertified and/or unapproved Contractors, materials, plants, etc. shall not participate in or perform work on this project until such time as documentation is provided to the Engineer showing recertification and/or approval.

15.25.3.8 The Contractor shall make the required corrections as noted on the submittals and shall return the required number of corrected copies of shop drawings and/or submittals as required for review and approval. The Contractor shall direct specific attention in writing to the required corrections and any additional revisions other than the corrections called for on previous submittals.

15.25.3.9 The Contractor shall not receive time extensions or additional cost for expired certifications and/or delays to submittal reviews and approvals.

15.25.4 Review and approval of schedules and submittals by the Engineer will not impose responsibilities on the City or interfere with or relieve the Contractor from the Contractor's full responsibilities.

15.25.5 There will be no direct payment for this work, the cost of which shall be included in other bid items.

15.26 BENCHMARK

15.26.1 The benchmark is provided on the plans.

15.27 MATERIALS, SERVICES AND FACILITIES

15.27.1 It is understood that, except as otherwise specifically stated in the contract documents, the Contractor shall provide and pay for all materials, labor, tools, equipment, water, gas, lights, power, transportation, superintendence, taxes, insurance, temporary contraction of every nature and all other services and facilities of every nature whatsoever necessary to execute, complete, and deliver the work within the specified time.

15.27.2 In order to use water from a fire hydrant, the Contractor shall apply for a temporary hydrant meter. The City of Columbia shall waive all fees for such application for this project. However, the Contractor shall be responsible for all water usage fees.

15.27.3 Any work necessary to be performed after regular working hours, on Sundays, or legal holidays, shall be performed without additional expense to the Owner.

15.28 "OR EQUAL" (SUBSTITUTE MATERIALS)

15.28.1 Whenever an item of material or equipment is specified or described in the Contract Documents by using the name of a proprietary item or the name of a particular Supplier, the specification or description is intended to establish the type, function, appearance, and quality required. Unless the specification or description contains or is followed by words reading that no like, equivalent, or "or-equal" item or no substitution is permitted, other items of material, products or equipment of other Suppliers may be submitted to the City for review under the circumstances described below:

15.28.2 "Or-Equal" Items: If in the Engineer's discretion an item of material, product or equipment proposed by the Contractor is functionally equal to that named and sufficiently similar so that no change in related work will be required, it may be considered by the Engineer as an "or-equal" item, in which case review and approval of the proposed item may, in the Engineer's sole discretion, be accomplished without compliance with some or all of the requirements for approval of proposed substitute items. For the purposes of this Paragraph, a proposed item of material, product or equipment will be considered functionally equal to an item so named if it is determined that all of the following are met:

15.28.2.1 It is at least equal in materials of construction, quality, durability, appearance, strength, and design characteristics,

15.28.2.2 It will reliably perform its intended function and achieve the results imposed by the design concept of the completed Project as a functioning whole,

15.28.2.3 It has a proven record of performance and availability of responsive service,

15.28.2.4 The Contractor certifies that, if approved and incorporated into the Project, there will be no increase in Contract Times or cost, and it will conform substantially to the detailed requirements of the item shown in the Contract Documents.

15.28.3 Substitute Items:

15.28.3.1 If in the Engineer's discretion, an item of material, product or equipment proposed by the Contractor does not qualify as an "or-equal" item under the above Section, they will consider a proposed substitute item.

15.28.3.2 The Contractor shall submit sufficient information to allow the Engineer to determine that the item of material or equipment proposed is essentially equivalent to that named and an acceptable substitute thereof. Requests for review of proposed substitute items of material, product or equipment will not be accepted by the Engineer from anyone other than the Contractor.

15.28.3.3 The Engineer will require for review supplemental in addition to the General Requirements as the Engineer deems appropriate under the circumstances.

15.28.3.4 The Contractor shall request to use substitute materials, products and/or equipment in writing and shall provide the Engineer certification that the proposed substitute will:

15.28.3.4.1 Perform the functions and achieve the results called for in the plans and the design.

15.28.3.4.2 Be similar in substance to that specified.

15.28.3.4.3 Be suited to the same use in the same conditions as that specified.

15.28.3.5 The Contractor shall:

15.28.3.5.1 State the extent, if any, to which the use of the proposed substitute will prejudice the Contractor's achievement of project completion.

15.28.3.5.2 State whether or not the use of the proposed substitute item in the work will require a change in any of the Contract Documents (or in the provisions of any other direct contract with the City for other work on the Project) to adapt the design to the proposed substitute item.

15.28.3.5.3 State whether or not incorporation or use of the proposed substitute item in connection with the work is subject to payment of any license or other fee.

15.28.3.5.4 Identify all variations and differences of the proposed substitute item from that specified.

15.28.3.5.5 Identify available engineering, sales, maintenance, repair and replacement services.

15.28.3.5.6 Prepare an itemized estimate of the cost or credits that will result directly or indirectly from the use of the proposed item, including cost of redesign and claims of other Contractors affected by any resulting changes.

15.28.4 Any item which the bidder desires to substitute as an "or equal" in preparing his bid shall be presented to the Engineer in writing (minimum of four (4) copies for the City's use – Contractor shall provide additional copies for his use), with all necessary information required to make an evaluation, at least fifteen (15) days prior to the bid opening. This will allow time for evaluation and issuing of an addendum. Any modification required due to the proposed "or equal" and not on the plans shall be the responsibility of the Contractor.

15.29 <u>STANDARD PRODUCTS AND MATERIALS NOT SPECIFIED</u>

15.29.1 The Contractor shall provide all materials and equipment required to complete the project as shown on the plans and in accordance with the contract documents. Materials not specified elsewhere shall be of such manufacture as is generally accepted for that portion of the work to which they pertain. The bid sheet is intended to be a comprehensive representation of all labor and materials required to complete the project as shown on the plans. Unless otherwise specified in these Special Provisions, unit prices shall include all necessary labor and

materials necessary to complete the work as shown on the plans and as described in the contract documents. Items not specifically identified on the bid sheet shall be considered incidental to the construction project and costs for such items shall be reflected in the unit price provided for the portion of the work to which the incidental items pertain.

15.30 PRODUCT DATA

15.30.1 Product data includes standard printed information on materials, products, and systems. Manufacturer's standard printed recommendations for application and use of all products shall be included as well as their compliance with standards, application of labels and seals, notation that field measurements have been checked, and special coordination requirements. It shall include the catalog data and manufacturer's technical data showing complete information on material composition, physical properties, and dimensions of all material used during the course of the project. The product data shall also include the manufacturer's recommendations for the handling and storage of materials and their recommendations for the repair of damaged materials. Required data shall be collected into one submittal for each unit of work or system, and each copy shall be marked to show which choices and options are applicable to the project. The submittal shall be delivered to the Engineer for review and approval. The review and approval by the Engineer does not relieve the Contractor of meeting the contract requirements.

15.31 SAMPLES

15.31.1 Samples include both fabricated and unfabricated physical examples of materials, products, and units of work, both as complete units and as smaller portions of units of work, either for limited visual inspection or, where indicated, for more detailed testing and analysis. Units shall be provided that are identical to the final condition of proposed materials or products for the work. A full set of optional samples shall be provided where the Engineer's selection is required. Samples shall also be prepared to match the Engineer's sample where indicated. Information shall be included with each sample to show generic description, source or product name and manufacturer, limitations, and compliance with standards.

15.32 PATENTS

15.32.1 The Contractor shall hold and save the City and its officers, agents, servants, and employees harmless from liability of any nature or kind, including cost and expense for, or on account of, any patented or unpatented invention, process, article, or appliance manufactured or used in the performance of the contract, including its use by the City, unless otherwise specifically stipulated in the contract documents.

15.32.2 If the Contractor uses any design, device or materials covered by letter, patent, or copyright, he shall provide for such use by suitable agreement with the City for such patented or copyrighted design, device or material. It is mutually agreed and understood that, without exception, the contract prices shall include all royalties or costs arising from the used of such design, device or materials in any way

involved in the work. The Contractor and/or his Sureties shall indemnify and save harmless the City from any and all claims for the infringement by reason of the use of such patented or copyrighted design, device or materials or any trademark or copyright in connection wit work agreed to be performed under this contract, and shall indemnify the City for any cost, expense or damage which it may be obliged to pay by reason of such infringement at any time during the prosecution of the work or after completion of the work.

15.33 DELIVERY, STORAGE, AND HANDLING

15.33.1 All materials furnished by the Contractor shall be delivered and distributed at the site by the Contractor. No materials will be furnished by the Owner unless otherwise noted.

15.33.2 The Contractor shall deliver, store, and handle pipe and fittings and any other materials as recommended by manufacturer and required to prevent damage.

15.33.3 If the coating, lining, etc. of new pipe and fittings become damaged before or during installation, it shall be repaired as recommended by the manufacturer or replaced as required by the Engineer at the Contractor's expense, before proceeding further.

15.33.4 In distributing the material at the site of the work, each piece shall be unloaded opposite or near the place where it is to be laid in the trench.

15.33.5 There shall be no direct payment for these items, the cost of which shall be included in other bid items.

15.34 CONTRACTOR'S TITLE TO MATERIALS

15.34.1 No materials or supplies for the work shall be purchased by the Contractor or by any Subcontractor subject to any chattel mortgage, conditional sales contract, or other agreement by which an interest is retained by the seller. The Contractor warrants that he has good title to all materials and supplies used by him, free from all liens, claims or encumbrances.

15.35 INSPECTION AND TESTING MATERIALS, QUALITY AND GUARANTEES

15.35.1 All work done and all materials furnished, whether incorporated in the work or not, all processes of manufacture, and all methods of construction shall be at all times and places subject to the inspection of the Engineer or his inspector(s) on the work site, or at the place of shipment, delivery, or manufacture of materials to insure that the work done and materials furnished under this contract conform in every respect to the plans, specifications and instructions.

15.35.2 The Engineer shall have the right to mark rejected materials to distinguish them as such. The Contractor shall furnish the inspector with the necessary facilities and assistance for carrying out his duties. The work and materials shall be supervised by the Engineer and the inspectors to obtain the finished product in accordance with the plans, specifications and contract with as little inconvenience to the

public as possible. The City shall not assume any liabilities of the Contractor or relieve him of any of his obligations.

15.35.3 All materials, supplies and parts, or assemblies thereof, entering into the work shall be tested as specified herein or otherwise required, according to approved methods for the particular type and class of work.

15.35.4 The inspection and testing of materials and finished articles to be incorporated in the work shall be made by persons, laboratories, or agencies approved by the City. The cost of such inspection and testing shall be paid by the Contractor.

15.35.5 When required, all tests and trials shall be made in the presence of the authorized representative of the Engineer. When the presence of the inspector is not required, sworn statements in duplicate of the tests made and the results thereof shall be furnished to the Engineer as soon as possible after completion of tests.

15.35.6 Where standard published specifications of recognized authorities or organizations are specified, the latest revision of such specification at the time the work is executed shall govern, unless otherwise authorized or directed.

15.35.7 Materials of construction, particularly those upon which the strength and durability of the structure may depend, shall be subject to inspection and testing to establish conformance with specifications and suitability for uses intended.

15.35.8 All materials, parts and equipment furnished and incorporated in the work shall be high grade, free from defects and imperfections, of recent manufacture and unused. Workmanship shall be of the highest grade and in accordance with the best modern standard practice.

15.35.9 The City Engineer shall determine the quality and quantity of the several kinds of work and materials which are included in this contract. He shall determine all questions relating to lines, levels and dimensions of the work, and interpretations of the plans and specifications.

15.35.10 Where the specifications call for certified copies of mill or shop tests to establish conformance with the specifications, it shall be the responsibility of the Contractor to assure the delivery of such certifications to the City Engineer.

15.35.11 No materials or finished articles shall be incorporated in the work until such materials and finished articles have passed any required tests. The Contractor shall promptly segregate and remove rejected material or finished articles from the site of the work. Failure to condemn the material on preliminary inspection shall not be grounds for acceptance if defects are found later.

15.35.12 The testing and approval of materials by the laboratory, or laboratories, shall not relieve the Contractor of his obligations to fulfill his contract and guarantee workmanship and materials. The Contractor may, at his option, and at his own expense, cause such other test to be conducted as he may deem necessary to assure suitability, strength and durability of any material or finished article.

15.35.13 The Engineer shall be the final judge of the quality and suitability of the work, materials, processes of manufacture, and methods of construction for the purposes for which they are used. Should they fail to meet his approval and/or do not conform to the requirements of the specifications, upon notice from the Engineer, they shall be removed from the work, forthwith reconstructed, made good, replaced and/or corrected as the case may be by the Contractor at his own expense. Rejected materials shall immediately be removed from the site. If, in the opinion of the Engineer, it is undesirable to replace any defective or damaged materials or to reconstruct or correct any portion of the work injured or not performed in accordance with the Contract Documents, the compensation to be paid to the Contractor hereunder shall be reduced by such amount that, in the judgment of the Engineer, shall be equitable.

15.36 MATERIAL TESTING

15.36.1 The Contractor is responsible for providing the Engineer a copy of the proposed Quality Control and Quality Acceptance Program for review and for maintaining such program for the duration of the project. This program shall include all activities necessary for the design, production, placement, inspection, compaction, sampling, and testing of subgrade, base coarse, concrete, flowable fill, asphalt and all other materials as required in the Contract Documents and in accordance with South Carolina Department of Transportation Standard Specifications for Highway Construction, latest edition, with supplemental specifications.

15.36.2 Tests required per these Contract Documents are considered a necessary part of the work. The Contractor shall make all arrangements for such tests, inspections, and approvals with a testing laboratory certified by the South Carolina Department of Transportation and acceptable to the City. The Contractor shall bear all related cost of tests, inspections and approvals and shall give the City Inspector timely notice (minimum of 48 hours) of when and where tests and inspections are to be made so that Inspector can be present for such procedures.

15.36.3 The Contractor shall provide the Engineer copies of the Contractor-selected South Carolina Department Of Transportation Certified material testing laboratories and a current organizational chart including names, telephone numbers and current certifications of personnel responsible for the Quality Control Program, testing, inspection, etc. on the project at the Pre-Construction Meeting. All tests performed shall be under the supervision of certified personnel or it may result in non-payment, delay and/or reduction in payment for the material of concern.

15.36.4 The Contractor shall submit a signed and certified written report, in duplicate, of each inspection, test, or similar quality control and quality assurance service performed to the Engineer within three (3) working days of the performed service; this copy can be faxed but will be considered a copy. All original final written reports shall be turned over to the Engineer at substantial completion of the project. Written reports and attached forms of each inspection, test or similar service shall be complete and accurate, shall specify the test locations on a drawing, shall specify the tests performed, shall include the methods used to perform the test and shall be signed, stamped and dated by the certified person in the firm. Any reports or forms that are not completely filled out and/or signed

and dated by the certified party may not be accepted by the City of Columbia and may result in non-payment, delay and/or reduction in payment. Receipt of these reports by the Engineer shall not relieve the Contractor of the responsibility of notifying the Engineer of any noted testing deficiencies or to make adjustments and/or corrections to any materials and/or items that do not meet the testing requirements.

15.36.5 The Contractor shall manage and coordinate all material testing and sequencing of activities to avoid the necessity of removing and replacing construction work to accommodate inspections and tests. The Contractor is responsible for scheduling times for inspections, testing, taking samples, and similar activities and shall be responsible for ensuring all tests are performed in accordance with the Contract Documents and South Carolina Department of Transportation Standard Specifications for Highway Construction, latest edition and the supplemental specifications. The City Inspector may require the Contractor to perform additional testing of questionable materials and/or construction methods for verification that the resulting product(s) meets the required specifications at no cost to the City. Failure to comply with this requirement may result in non-payment, delay and/or reduction of payment. Decisions regarding acceptance, rejection or acceptance at an adjusted price will be based on the material testing results that are within the specification limits.

15.36.6 If testing, inspection and/or approval reveal that portions of the work fail and/or do not comply with the Contract Documents, all cost for the correction and re-testing of the work shall be borne by the Contractor.

15.36.7 Hot Mix Asphalt (HMA):

15.36.7.1 This project is considered Low Tonnage Paving according to the South Carolina Department of Transportation (SCDOT) latest specifications and Supplemental Technical Specifications for Hot Mix Asphalt (HMA) Quality Assurance.

15.36.7.2 The Contractor shall coordinate the required plant acceptance tests as identified in Section 3.6.2 of the referenced Supplemental Technical Specification in 1.7.1 at a frequency of one (1) test per 500 tons, or a minimum of three (3) tests over the life of the project if the amount installed is spread over more than three (3) days, whichever is greater. Each core will be tested for the presence of hydrated lime in the mix. All documentation and test results shall be submitted to the Engineer in accordance with SCDOT specifications and copies may be provided to SCDOT when applicable to SCDOT-owned streets. If any of the tested properties fail to meet the job mix formula requirements, the Contractor shall follow the procedures as outlined in Sections 3.7 of the referenced Supplemental Technical Specifications.

15.36.7.3 In-place Density and Thickness Determination in the Roadway/Travel Lane:

15.36.7.3.1 Resurfacing:

15.36.7.3.2 The determination of the in-place density and thickness of asphalt and binder courses will be based on the core data for each day's production. A minimum of two (2) 6-inch cores will be obtained for each day of asphalt pavement work.

15.36.7.3.3 Specification Limits for In-Place Density will be in accordance with SCDOT specifications based on the Percent of Theoretical Maximum Density for all types of intermediate and surface courses. Pavements that do not meet the specification requirements will be removed and replaced at no additional cost to the City.

15.36.7.3.4 The average pavement thickness must be equal or greater than the plan thickness with no individual measurement thinner than the minimum thickness minus 0.25. Pavements that do not meet these minimum thickness requirements will either be removed and replaced or overlaid at the discretion of the Engineer at no additional cost to the City.

15.36.7.4 Full Depth Patching:

15.36.7.4.1 The Contractor shall maintain an approved density gauge on site during all HMA placing and compaction operations and use the gauge to assist in the quality control of the compaction process.

15.36.7.5 If the asphalt mixture is obviously contaminated, segregated, or otherwise unacceptable, the Contractor shall perform tests to determine if the material meets the specifications. Failure to meet the specifications shall result in rejection, removal and replacement at the Contractor's expense.

15.36.8 No additional payments will be made to the Contractor for performance of this work.

15.36.9 Soils Testing

15.36.9.1 The Contractor shall have a testing agency to sample and test soils at the site of the work. All soils testing shall be conducted by a testing laboratory qualified and approved by the City to perform the required sampling, analysis, testing and report services.

15.36.9.2 Reports for moisture-density tests shall include the date, the location of the tests, the evaluation or depth at which the test was taken, the maximum dry density, and the moisture contents as well as moisture-density curves for each change in sample. The report shall also include the plastic index (PI) and liquid limit classification for each change in sample in accordance with SCDOT standards and specifications.

15.36.9.3 Written reports shall be forwarded to the Engineer within the required time frame. The Contractor shall submit all the required Proctor and Classification soil tests prior to construction.

15.36.10 The sampling and testing frequency of backfill, compaction, subbase, base course, concrete, asphalt and all other materials shall be altered from testing frequencies established by SCDOT due to the length of the project. Testing frequencies shall be increased to insure adequate assurance of the Contractor's Quality Control and Quality Acceptance Program. If the material is obviously contaminated, segregated, excessively wet or otherwise unacceptable, the Contractor shall perform tests to determine if the material meets the specifications.

15.36.11 No separate payment will be made for testing, inspecting, meetings, travel expenses, direct costs, overhead, profit, insurance, costs for expendable supplies, certifications, materials, equipment, mileage, disposal fees, or any other activities or expenses associated with the performance of testing.

15.36.12 At the City of Columbia's discretion, any materials may be submitted to a qualified testing lab approved by the City.

15.36.13 Payment for all testing shall be the Contractor's responsibility. No separate payment will be made by the City of Columbia.

15.37 EXPERIENCE OF MANUFACTURER

15.37.1 The manufacturer of materials shall submit to the City, when requested by the City Engineer, evidence of having consistently produced materials of satisfactory quality and performance for a period of at least two years.

15.38 COMPLETED PORTIONS OF WORK

15.38.1 The owner reserves the right to accept and use any portion of the completed work deemed necessary by the City Engineer to protect the public health and safety.

15.39 CHANGES IN WORK

15.39.1 No changes in the work covered by the contract documents shall be made without having prior written approval of the City. Charges or credits for the work covered by the approved change shall be determined by one, or a combination of the following methods:

15.39.1.1 Unit bid prices previously approved.

15.39.1.2 An agreed lump sum.

15.39.1.3 The actual cost of:

15.39.1.3.1 Labor, including foreman.

15.39.1.3.2 Materials entering permanently into the work.

15.39.1.3.3 The ownership or rental cost of construction plant and equipment during the time of use on the extra work.

15.39.1.3.4 Power and consumable supplies for the operation of power equipment.

15.39.1.3.5 Insurance.

15.39.1.3.6 Social Security, old age and unemployment contributions.

15.39.1.3.7 In addition to the actual costs, there can be added a fixed fee to be agreed upon by the Contractor and the City, but not to exceed 15 percent of the estimated cost of the work. The fee shall be compensation to cover the cost of supervision, overhead, bond, profit and any other general expense.

15.39.2 The Contractor shall include a breakdown of all materials, labor and equipment necessary to perform the work and shall furnish satisfactory bills, payrolls and vouchers covering all items of cost and when requested, provide the City access to accounts relating thereto.

15.40 CLAIMS FOR EXTRA WORK

15.40.1 Without invalidating the contract, the City may order extra work or make changes by altering, adding to or deducting from the work, the contract sum being adjusted accordingly, and the consent of the surety being obtained where necessary or desirable. All the work of the kind bid upon shall be paid for at the price stipulated in the proposal, and no claims for any extra work or materials shall be allowed unless the work is ordered in writing by the City, or the Engineer acting officially for the City, and the price is stated in such order. Extra work shall be performed only upon the receipt of change orders. Without a written order, the Contractor shall not be entitled to payment for extra work.

15.41 ESTIMATED QUANTITIES OF WORK

15.41.1 The estimated quantities of work to be done and materials to be furnished under this contract, shown in any of the documents, including the proposal, are given for use in comparing bids, and the right is especially reserved except as herein otherwise specifically limited, to increase or diminish them as may be deemed reasonably necessary or desirable by the City to complete the work contemplated by this contract, and such increase or diminution "shall in no way vitiate" this contract, nor shall nay such increase or diminution give cause for claims or liability for damages. Payment for such alterations will be made based on the pricing derived from the Contractor's bid prices.

15.42 TIME FOR COMPLETION; LIQUIDATED DAMAGES AND NO DAMAGES FOR DELAYS

15.42.1 It is hereby understood and mutually agreed by and between the Contractor and the City that the time for completion as specified in the contract is an essential condition of the contract. It is further mutually understood and agreed that the work embraced in this contract shall be commenced on a date to be specified in the notice to proceed.

15.42.2 The Contractor agrees that said work shall be prosecuted regularly, diligently and interruptedly at such rate of progress as will insure full completion thereof within the time specified. It is expressly understood and agreed, by and between the Contractor and the City, that the time for completion of the work described herein is a reasonable time for completion of same, taking into consideration the average climatic range and usual industrial conditions prevailing in this locality.

15.42.3 If the Contractor shall neglect, fail or refuse to compete the work within the time herein specified, or any proper extension thereof granted by the City, then the Contractor does hereby agree, as a part consideration for the awarding of this contract, to pay to the City the amount specified in the contract, not as a penalty but as liquidated damages for such breach of contract as hereinafter set forth, for each and every calendar day that the Contractor shall be in default after the time

stipulated in the contract for completing the work. The said amount is fixed and agreed upon by and between the Contractor and the City because of the impracticability and extreme difficulty of fixing and ascertaining the actual damages the City would sustain and said amount shall be retained from time to time by the City from current periodic estimates.

15.42.4 It is further agreed that time is of the essence of each and every portion of this contract and of the specifications wherein a definite and certain length of time is fixed for the performance of any act whatsoever; and where under the contract an additional time is allowed for the completion of the work, the new time limit fixed by such extension shall be of the essence of this contract. Provided, that the Contractor shall not be charged with liquidated damages or any excess cost when the delay in completion of the work is due to:

15.42.4.1 Any preference, priority or allocation order duly issued by the Government.

15.42.4.2 Unforeseeable cause beyond the control and without the fault or negligence of the Contractor, including but not restated to acts of God, or of the public enemy, acts of the City, acts of another contractor in the performance of a contract with the City; fires, floods, epidemics, quarantine, restrictions, strikes, freight embargos, unusually severe weather; and

15.42.4.3 Any delays of subcontractors or suppliers occasioned by any of the causes specified in the above two subsections of this article.

15.42.5 Provided, further, that the Contractor shall, within seven (7) days from the beginning of such delay, unless the City shall grant a further period of time prior to the date of final settlement of the contract, notify the City in writing of the causes of delay. The City shall ascertain eh facts and extent of delay and notify the Contractor within a reasonable time of its decision in the matter, and grant such extension of time as it shall deem suitable and just.

15.42.6 The Contractor agrees to make no claim for damages, additional payment or additional compensation because of any hindrance or delay in the performance of this contract occasioned by any act or omission to act by the City or any of its representatives of occasioned by any other cause whatsoever, whether such act, omission to act or cause by avoidable or unavoidable. Contractor agrees that any such claim shall be fully compensated for by an extension of time to complete the performance of this contract and such extension of time shall be Contractor's SOLE AND EXCLUSIVE REMEDY for any hindrance or delay in the performance of this contract.

15.43 <u>CONSTRUCTION SCHEDULE AND PERIODIC ESTIMATES</u>

15.43.1 After execution and delivery of the contract and before the first partial payment is made, the Contractor shall deliver to the City an estimated construction progress schedule in form satisfactory to the City. It shall show the proposed dates of commencement and completion of each of the various subdivisions of work required under the contract documents and the anticipated amount of each monthly payment that will become due the Contractor in accordance with the progress schedule.

15.43.2 The Contractor shall also furnish: (a) a detailed estimate, giving a complete breakdown of the contract price; and (b) periodic itemized estimates of work done for the purpose of making partial payments thereon. The costs employed in making up any of these schedules will be used only for determining the basis of partial payments and will not be considered as fixing a basis for additions to or deductions from the contract price.

15.43.2.1 Equipment delivery schedule – The Contractor shall also prepare a schedule of anticipated shipping dates for materials and equipment. It is intended that equipment and materials be so scheduled as to arrive at the job site just prior to time for installation to prevent excessive materials on hand for inventory and the necessity for extensive storage facilities at the job site.

15.43.2.2 City's Right to Withhold Certain Amounts and Make Application Thereof – The Contractor agrees that he will indemnify and save the City harmless from all claims growing out of the lawful demands of subcontractors, laborers, workmen, mechanics, materialmen, and furnishers of machinery and parts thereof, equipment, power tools, and all supplies, including commissary, incurred in the performance of this contract. The Contractor shall, at the City's request, furnish satisfactory evidence that all obligations of the nature hereinabove designated have been paid discharged, or waived. If the Contractor fails to do this the City may, after having served written notice on the Contractor, either pay unpaid bills, of which the City has written notice, or withhold from the Contractor's unpaid compensation a sum of money deemed reasonably sufficient to pay any and all lawful claims. When satisfactory evidence is furnished that all liabilities have been fully discharged, payment to the Contractor shall be resumed in accordance with the terms of this contract. In no event shall the provisions of this paragraph be construed to impose any obligations upon the City to either the Contractor or his surety. In paying any unpaid bills of the Contractor, the City shall be deemed the agent of the contractor, and any payment so made by the City shall be considered as payment made under the contract to the Contractor, and the City shall not be liable to the Contractor for any such payment made in good faith.

15.44 PROCEDURES FOR SUBMITTING PAY REQUESTS

15.44.1 The contractor shall submit his estimate for payment on or before the third day of each month. The City will pay to the contractor ninety (90) percent of the value of the work performed, as estimated by the City Engineer, less the aggregate of previous payments, on or before the fifteenth (15) day of each month. Estimates that are submitted later will require additional time for processing for payment.

15.44.2 Requests for payment will be made using the owner's standardized Application for Payment. Construction Management will provide the Contractor a copy of the documents on disc, electronically and/or in hard copy form prior to the first pay request. The contractor must reference the project name, description, and owner's project number on all pay requests.

15.44.3 All requests for payment must be addressed to the City Construction Management Division and mailed directly to the division's office at P.O. Box 147, Columbia, SC 29217. Four (4) original Application for Payments must be signed, dated,

notarized and submitted for payment. Payments will not be processed from copies. If Construction Management makes any changes prior to payment, the contractor will be mailed a remittance copy reflecting those changes.

15.44.4 The Contractor shall submit for review a completed itemized Application for Payment to the City Inspector that includes the work completed as of the date the application is submitted, with supporting documentation showing the extents of the work and/or quantities in the request for payment. Supporting documentation shall be in a form such as drawings that represent the actual measurements and dimensions so they can be field verified and/or used in subsequent Applications for Payment. Previous quantities paid shall also be shown in the supporting documentation for comparison purposes and for tracking previous quantities paid and the respective locations at which they were paid.

15.44.5 Submittal of an itemized Application for Payment and supporting documentation by the Contractor shall indicate that the Contractor has inspected those portions of the work included in the application and has determined and certifies that all portions of the work are in compliance with the Contract Documents and that the quantities submitted for payment are true and accurate.

15.44.6 The City Inspector will review the submitted itemized Application for Payment and will indicate in writing either recommendation for payment or request corrections/adjustments prior to recommending payment and return such to the Contractor. The Contractor shall make the necessary corrections and resubmit the Application. Errors and/or discrepancies discovered by the City Inspector in the Application for Payment and/or any supporting documentation will be noted and returned to the Contractor for correction. Such errors and/or discrepancies may result in delay of payment to the Contractor.

15.44.7 Recommendations for payment will constitute a representation by the City Inspector based on supporting data and documentation that, to the best of the City Inspector's knowledge, information and belief, the work has progressed to the point indicated. However, recommendation for payment does not waive claims for defects, does not constitute acceptance of work not in accordance with the Contract Documents, does not indicate that the work was constructed in accordance with the Contract Documents and does not relieve the Contractor of the responsibility to correct any deficiencies or damaged work that may be found at a later date.

15.44.8 If payment is requested on a basis of materials not yet incorporated into the work but which are delivered, suitably stored, and verified by the Inspector, the bill of sale, invoice, or other documentation shall be submitted with the Application for Payment warranting to the City of Columbia that the materials are free and clear of all Liens and evidenced that the materials are covered by appropriate property insurance or other arrangements showing protection of materials.

15.44.9 The City of Columbia may withhold, in whole or in part, payments previously made to such extent as may be necessary in the City's opinion to protect the City from loss for which the Contractor is responsible, including loss resulting from acts and/or omissions of the Contractor's employees, subcontractors and their

agents and employees, and other persons or entities performing portions of the work for, or on behalf of, the Contractor or any of its subcontractors because of, but not limited to, the following:

15.44.9.1 Defective work not remedied;

15.44.9.2 Third party claims filed or reasonable evidence indicating probable filing or such claims unless security acceptable to the City is provided by the Contractor;

15.44.9.3 Failure of the Contractor to make payments properly to subcontractors or for labor, materials and/or equipment;

15.44.9.4 Reasonable evidence that the work cannot be completed for the unpaid balance of the Contract Sum;

15.44.9.5 Damage to the City or another Contractor;

15.44.9.6 Reasonable evidence that the work will not be completed within the Contract Time, and that the unpaid balance would not be adequate to cover actual or liquidated damages for the anticipated delay; or

15.44.9.7 Persistent and repeated failure to carry out the work in accordance with the Contract Documents, Plans and Specifications.

15.44.10 City's Right to Withhold Certain Amounts and Make Application Thereof - The Contractor agrees that he will indemnify and save the City harmless from all claims growing out of the lawful demands of subcontractors, laborers, workmen, mechanics, materialmen, and furnishers of machinery and parts thereof, equipment, power tools, and all supplies, including commissary, incurred in the performance of this contract. The Contractor shall, at the City's request, furnish satisfactory evidence that all obligations of the nature hereinabove designated have been paid discharged, or waived. If the Contractor fails to do this the City may, after having served written notice on the Contractor, either pay unpaid bills, of which the City has written notice, or withhold from the Contractor's unpaid compensation a sum of money deemed reasonably sufficient to pay any and all lawful claims. When satisfactory evidence is furnished that all liabilities have been fully discharged, payment to the Contractor shall be resumed in accordance with the terms of this contract. In no event shall the provisions of this paragraph be construed to impose any obligations upon the City to either the Contractor or his surety. In paying any unpaid bills of the Contractor, the City shall be deemed the agent of the contractor, and any payment so made by the City shall be considered as payment made under the contract to the Contractor, and the City shall not be liable to the Contractor for any such payment made in good faith.

15.44.11 The owner will make payments for undisputed work within 21 days from receipt of the Application for Payment by owner. Disputed work will be addressed in writing to the contractor.

15.44.11.1 All material and work covered by partial payment shall become the sole property of the City. This provision shall not be construed as relieving the Contractor of the sole responsibility for the care and protection of materials and work upon

which payments have been made, the restoration of any damaged work, or as a waiver of the right of the City to require the fulfillment of all terms of the contract.

15.44.12 Upon completion and final acceptance by the City of all work covered under this contract, the City will pay to the Contractor the amount remaining to be paid him under the contract.

15.45 ACCEPTANCE OF WORK, FINAL PAYMENT AND CLOSEOUT PROCEDURES

15.45.1 When the Contractor considers the work to be complete, he shall notify the City Inspector of such in writing and shall include a comprehensive list of items that are incomplete and/or deficient, the value of the incomplete/deficient work and the reason why the work is incomplete and/or deficient. Failure to include all items on the comprehensive list of incomplete/deficient work does not relieve the Contractor of his responsibility to complete the work in accordance with the Contract Documents and does not indicate a waiver of the correction of such work by the City of Columbia.

15.45.2 The Engineer will review the comprehensive list for the purpose of determining if the work is sufficiently complete to schedule inspections. If they determine that the work is not sufficiently complete, they will notify the Contractor of such in writing. The Contractor will complete and/or correct the items and will submit another comprehensive list to the Engineer for review.

15.45.3 After submittal and review of the Record Drawings, the Contractor shall submit a written request for individual inspections of the various components of the work, i.e. sewer systems, water, storm, pavements, etc. The Inspector and Contractor shall schedule inspections of the work to determine the status of completion. Any items or construction found to be incomplete, damaged or not in accordance with the Contract Documents will be noted in writing with a copy provided to the Contractor. If the City of Columbia determines the work is not ready for inspection, the inspection will be cancelled and the Contractor will be notified in writing giving the reason therefore. There shall be no time extensions given to the Contractor when it is determined that the work is not ready for inspections.

15.45.4 The Contractor shall provide the Inspector a schedule acceptable to the City of Columbia of when the work will be corrected and/or completed. After completion of all work, the Contractor shall submit a request for another inspection in writing and the above-mentioned process will be repeated.

15.45.5 The Warranty for the project will not begin until all portions of the work have been inspected and the work has been accepted by the City of Columbia.

15.45.6 Operating Test – Before acceptance of the whole or any part of the work, it shall be subjected to test to determine that it is in accordance with the contract drawings and specifications. The Contractor shall maintain all work in first-class condition for a thirty (30) day operating period after the work has been completed, the final inspection has been made, and the Engineer has notified the Contractor in writing that the work has been finished to his satisfaction. The retained

percentage, as provided herein, will not become due or payable to the Contractor until after the thirty (30) day operating period has expired.

15.45.7 Cleaning Up - Before the work is considered complete, all rubbish and unused material due to or connected with the construction must be removed and the premises left in a condition satisfactory to the City. Streets, curbs, cross-walks, pavements, sidewalks, fence and other public and private property disturbed or damaged shall be restored to their former condition. Final acceptance will be withheld until such work is finished.

15.45.8 Prior to the submission of final payment request, the Contractor shall submit the following to the Engineer:

15.45.8.1 Videotapes and television inspection reports and photographs as required.

15.45.8.2 All Record Drawings, stamped, signed and dated by a registered surveyor licensed to practice in the state of South Carolina.

15.45.8.3 All material testing results including tests that failed along with follow up tests showing that the materials passed.

15.45.8.4 Submit all records as required in the Contract Documents in binders that are labeled with the project name, date, subject matter of contents and/or identification for easy reference. Records shall include, but not be limited to, specific warranties, workmanship bonds, certifications, product data and installation information, deviations in products installed on the project, and any other information associated with the work.

15.45.9 The Contractor shall submit the following to the City of Columbia prior to the City releasing final payment and retainage:

15.45.9.1 An affidavit that payrolls, bills for materials and equipment, and other indebtedness connected with the project for which the City or the City's property might be responsible or encumbered (less amounts withheld by the City) have been paid or otherwise satisfied.

15.45.9.2 A certificate evidencing that insurance required by the Contract Documents to remain in force after final payment is currently in effect and will not be canceled or allowed to expire until at least 30 days' prior written notice has been given to the City.

15.45.9.3 A written statement that the Contractor knows of no substantial reason that the insurance will not be renewable to cover the period required by the Contract Documents.

15.45.9.4 Consent of surety, if any, to final payment.

15.45.9.5 Data establishing payment or satisfaction of obligations, such as receipts, releases and waivers of liens, claims, security interests or encumbrances arising out of the Contract, to the extent and in such form as may be designated by the City. Final acceptance of the work will not be granted and the retained percentage will not be

due or payable until the Contractor has furnished the City proper and satisfactory evidence under oath that all claims for labor and material employed or used in the construction of the work under this contract have been settled, and that no legal claims can be filed against the City for such labor or materials.

15.45.10 The making of final payment and retainage shall constitute a waiver of Claims by the City except those arising from:

15.45.10.1 Liens, claims, security interests or encumbrances arising out of the Contract and unsettled.

15.45.10.2 Failure of the work to comply with the requirements of the Contract Documents.

15.45.10.3 Terms of special warranties required by the Contract Document.

15.45.11 Final Payment – Upon compliance with the above requirements, the Engineer will issue a certificate of final acceptance of the work. The Contractor shall then prepare his final estimate. After review and approval of the final estimate by the Engineer and the City, the payment shall become due.

15.46 RECORD DRAWING

15.46.1 Prior to the Contractor's written request of walk-throughs and/or inspections and submission of final payment request, the Contractor shall prepare and provide the Engineer two (2) sets of as-built record drawings stamped, signed and dated by a registered surveyor licensed to practice in the state of South Carolina certifying that all locations, dimensions and facilities are accurately shown or indicated on the Record Drawings.

15.46.2 Coordinates on the as-built drawings shall be based on South Carolina State Plane Coordinate System: NAVD 88 Vertical Control and NAD 83 Horizontal Control. The Contractor shall provide the Engineer a digital file of the surveyed points including elevations on a CD in which the data can be downloaded into the City of Columbia's GIS map and CAD file.

15.46.3 The plans shall also be marked showing distances to permanent points such as property irons, property corners and other unmovable items for every new installation below grade – building corners are not acceptable unless they coincide with the property corner. The Contractor shall include the type, size and depth of all utility installations.

15.46.4 Record drawings shall be considered incidental to the construction and will not be paid for separately.

15.47 ACCEPTANCE OF FINAL PAYMENT AS RELEASE

15.47.1 The acceptance by the Contractor of final payment shall and shall operate as a release to the City of all claims and all liability to the Contractor for all things done or furnished in connection with this work and for every act and neglect of the City and others relating to or arising out of this work. No payment, final or

otherwise, shall operate to release the Contractor or his sureties from any obligations under this contract or the performance and payment bond.

15.48 GENERAL WARRANTY FOR THREE YEARS AFTER COMPLETION OF CONTRACT

15.48.1 For a period of at least three years after the completion of the contract, the contractor warrants the fitness and soundness of all work done and material sand equipment put in place under the contract. Neither the certificate of final acceptance, payment of the final estimate, nor any provision in the Contract Document, nor partial or entire occupancy of the premises by the City shall constitute an acceptance of work not done in accordance wit the Contract Documents, nor relive the Contractor of liability in respect to any express warranties or responsibility for faulty materials or workmanship. The Contractor shall remedy any defects in the work and pay for any damage to other work resulting therefrom, which shall appear within a period of three years from the date of final acceptance of the work unless a longer period is specified. The City will give notice of observed defects with reasonable promptness.

15.49 RIGHT OF CITY TO TERMINATE CONTRACT

15.49.1 In the event any of the provisions of this contract are violated by the Contractor or by any of his subcontractors, the City may serve written notice upon the Contractor and the surety of its intention to terminate the contract. Notices shall contain the reasons for the intention to terminate the contract. Unless within then (10) days after the serving of the notice the violation or delay ceases and satisfactory arrangements for correction are made, the contract shall cease and terminate. In the event of termination, the City shall immediately serve notice thereof upon the surety and the Contractor. The surety shall have the right to take over and perform the contract; provided, however, if the surety does not commence performance thereof within ten (10) days from the date of the mailing of notice of termination, the City may take over the work and prosecute same to completion by contract at the expense of the Contractor. The Contractor and his surety shall be liable to the City for any excess cost occasioned the City there by, and in such event the City may take possession of and utilize in completing the work any materials, appliances and plant that may be on the site of the work and necessary thereto.

15.49.2 If the Contractor should die, be declared incompetent, bankrupt or insolvent, or make an assignment for the benefit of creditors during the term of his contract, the City may terminate the contract in the manner and under the procedure set forth above with the exception that no notices to the Contractor shall be required. However, the City must make a reasonable effort to notify the estate of the Contractor, his guardian, assignee, or legal representative of the intention to terminate and fact of termination, if there is any guardian, assignee, or legal representative at the time the City desires to terminate.

15.50 TERMINATION FOR CONVENIENCE AND SUSPENSION OF WORK

15.50.1 Should the City be prevented or enjoined from proceeding with the work, or from authorizing its prosecution, either before or after the commencement, by reason of

any litigation, rules, regulations, laws, or ordinances of another governmental entity, the Contractor shall not be entitled to make or assert claims for damage by reason of said delay or to withdraw from the contract except by consent of the City. The time for completion of the work shall be extended to such time as the City determines, such determination to be set forth in writing.

15.51 REPORTING ON JOB RETENTION AND CREATION

15.51.1 On City projects that are being funded in whole or in part by stimulus money, the successful bidder will be required to report an estimate of jobs directly created or retained by the proposed project in conjunction with the submittal of each pay request. The Contractor will be required to report an aggregate number for the cumulative jobs created or retained for each payment period. Contractors will also be asked to provide a narrative description of the employment impact.

15.51.2 On projects not being funded by stimulus money, the City of Columbia is requesting assistance from the successful bidder in monitoring how City projects are helping to retain and/or create job positions.

15.51.3 Reporting requirements include the following:

15.51.3.1 The Contractor shall report an estimate of jobs directly created or retained by the project in conjunction with the submittal of each pay request. The Contractor shall report an aggregate number for the cumulative jobs created or retained for each payment period. The Contractor will also be asked to provide a narrative description of the employment impact. A job created is a new position created and filled or an existing unfilled position that is filled as a result of this project; a job retained is an existing position that would not have been continued to be filled were it not for this project. A job cannot be counted as both created and retained.

15.51.3.2 The estimate of the number of jobs required by this contract should be expressed as “full-time equivalent” (FTE), which is calculated as total hours worked in jobs created or retained divided by the number of hours in a full-time schedule, as defined by the Contractor (see Calculation Methodology for more information). The FTE estimates must be reported cumulatively each pay period.

15.51.3.3 The Contractor must include in the aggregate number and the narrative description an estimate of jobs created and retained by their subcontractors.

15.51.3.4 The Contractor should not attempt to report on the employment impact on materials suppliers and central service providers (so-called “indirect” jobs) or on the local community (“induced” jobs). Employees who are not directly charged to this project, who, nonetheless, provide critical indirect support, e.g., clerical/administrative staff preparing reports, institutional review board staff members, departmental administrators, are NOT counted as jobs created/retained.

15.51.3.5 The narrative should include a brief description of the types of jobs created or retained. This description may rely on job titles, broader labor categories, or the Contractor’s existing practice for describing jobs as long as the terms used are widely understood and describe the general nature of the work.

15.51.4 Calculation Methodology:

15.51.4.1 The requirement for reporting jobs is based on a simple calculation used to avoid overstating the number of other than full-time, permanent jobs. This calculation converts part-time or temporary jobs into "full-time equivalent" (FTE) jobs. In order to perform the calculation, the Contractor will need the total number of hours worked on this project. The Contractor will also need the number of hours in a full-time schedule for a pay period. The formula for reporting can be represented as:

$$\text{FTE} = \frac{\text{Cumulative Hours Worked}}{\text{Cumulative Hours in a Full-time Schedule}}$$

15.51.4.2 Example:

15.51.4.2.1 Assume that a Contractor is preparing its first payment application and that the Contractor required two full-time employees and one part-time employee working half days for the quarter. Also assume that the Contractor's full-time schedule for the period is 173 hours (2080 hours in a work-year divided by 12). To convert hours worked to number of FTE for the first period, aggregate all hours worked and divide by the number of hours in a full-time schedule for the period. In this example, full-time hours worked (173 hrs x 2 employees = 346 hrs) + part-time hours worked (87 hrs) ÷ number of hours in a full-time schedule for the period (173 hrs) = 2.5 FTE reported in the first period report. Because jobs are reported cumulatively each period, this same number of FTE would be reported for the second period if the same number of employees worked the same number of hours.

15.51.4.2.2 Reporting is cumulative across the project lifecycle, and will not reset at the beginning of each calendar or fiscal year. In the example above, the 2.5 FTE reported in the first report will stay the same through the project lifecycle, assuming the same number of employees work the same number of hours. The table below shows the FTE calculations through the lifecycle of a 4 month project that uses full-time, part-time, and temporary workers.

Period	1st pay period	2nd pay period	3rd pay period	4th pay period
Full Time Schedule	173	346	519	692
Full Time Employee 1	173	346	519	692
Full Time Employee 2	173	346	519	692
Part Time Employee (1/2)	87	174	261	348
Temporary Employee	0	0	43	86
Total Hours Worked	433	866	1342	1818
FTE per Period	**2.50**	**2.50**	**2.58**	**2.63**

15.52 WAGES AND OVERTIME COMPUTATION

15.52.1 The Contractor and each of his subcontractors shall comply with all applicable Federal, State and local laws or ordinances with respect to the hours worked by

laborers and mechanics engaged in work on the project and with respect to compensation for overtime.

15.53 PROTECTION OF MATERIAL, WORK AND PROPERTY; AND INJURIES TO PERSONS AND PROPERTY

15.53.1 The Contractor shall at all times take reasonable and proper precautions to protect and safeguard the City's, public and private property, including his own work and all materials of every description both before and after use in the work, from damage or injury or loss in connection with this contract.

15.53.2 The Contractor shall at all times take reasonable and proper precautions to protect and safeguard persons and animals, and must maintain public safety during execution of this contract.

15.53.3 The Contractor shall furnish, erect, install and maintain all necessary temporary works which shall include, but not be limited to, barricades, fences, railings, warning signs, traffic control devices and lights for protection of his work and excavations at night. A sufficient number of lights shall be placed about the work and shall be kept burning from twilight to sunrise. Barricades, warning signs, traffic control devices and other safety devices shall meet the requirements of OSHA, South Carolina Department of Transportation and City of Columbia requirements. No work will commence until the Contractor has secured approval from the agency responsible for the right-of-way in which construction is proposed.

15.53.4 The Contractor shall be held responsible for all injuries to persons and animals and for all damages to the property of the Owner or others caused by or resulting from the negligence of himself, his employees or his agents, during the progress of or in connection with the prosecution of the work, whether within the limits of the work under the contract proper or as extra work.

15.53.5 The Contractor must, as far as practical and consistent with good construction, permit access to private and public property and leave fire hydrants, catch basins, streets, etc., free from encumbrances.

15.53.6 The Contractor must restore, replace or make good at his own expense, unless such was caused directly by errors contained in the Contract, by the City, or its duly authorized representatives, any and all damage, loss, or injury to persons, animals, and/or property caused by any negligence of omission or commission on his part or on the part of his agent, including sidewalks, curbing, sodding, pipes, conduits, sewers, buildings, fences, retaining walls, tanks, power lines, or any other private or public property to a condition of equal or better comparison to the condition of the property when he entered upon the work.

15.53.7 In case of failure on the part of the Contractor to restore such property or make good such damage, the Owner may upon forty-eight (48) hours notice proceed to repair, rebuild, or otherwise restore such property as may be deemed necessary, and the cost thereof will be deducted from any money due or which may become due under this contract.

15.53.8 The Contractor shall indemnify and hold harmless the Owner or the Engineer acting in behalf of the Owner from all suits and actions that may be brought against it by reason of any injury, or alleged injury, to the person or property of another resulting from negligence or carelessness in the execution of the work, or on account of any negligent act or omission, or improper methods or means of construction on the part of the Contractor, his representatives, or employees.

15.54 SAFETY REGULATIONS

15.54.1 All methods of construction including, but not limited to, trenching, sheeting and bracing, boring and jacking and pipeline construction shall be done in accordance with the latest O.S.H.A. regulations. A trench box or trench shield may be used in lieu of sheeting when permitted by O.S.H.A.

15.54.2 In conformance with OSHA requirements, excavations greater than 20 feet shall be designed and certified by a Professional Engineer, registered in the State of South Carolina. Certified copies of all such excavation bracing design shall be submitted to the Engineer for review and approval. Design must be submitted to the Engineer prior to the start of work and before any pay requests will be approved; however, submittal does not relieve the Contractor of his responsibility for the design.

15.54.3 The Contractor is fully and solely responsible for complying with all laws, regulations, ordinances, and governmental orders pertaining to safety in the performance of this Contract. He shall be responsible for employing adequate safety measures and for taking all actions that are reasonably necessary to protect the life, health, work and safety of the public and adjacent properties during construction of the project. The Contractor shall conform to OSHA requirements and regulations while operating in a confined space that requires a permit.

15.54.4 The Contractor shall submit to the Engineer for review and comment a written site-specific Safety Plan for this project at the Pre-Construction Meeting. Any comments provided by the Engineer on the Safety Plan shall not in any way relieve the Contractor of any responsibility or liability for the Safety Plan and will not constitute grounds for contract time extensions or delays if submittal of the written Safety Plan is delayed.

15.54.5 The Contractor shall have a designated, qualified and experienced safety representative at the site whose duties and responsibilities shall be the prevention of accidents and the maintenance and supervision of safety practices, precautions and programs.

15.54.6 All associated cost for this work shall be included in other bid items.

15.55 PROTECTION OF EMPLOYEES' LIVES AND HEALTH

15.55.1 In order to protect the lives and health of his employees under the contract, the Contractor shall comply with all pertinent provisions of the Occupational Safety and Health Act and the "Manual of Accident Prevention of Construction" issued by the Associated General Contractors of America, Inc., and shall maintain an accurate record of all cases of death, occupational disease, and injury requiring

medical attention or causing loss of time from work, arising out of and in the course of employment on work under the contract. The Contractor alone shall be responsible for the safety, efficiency and adequacy of his plant, appliances and methods, and for any damage which may result from their failure or their improper construction, maintenance or operation.

15.56 WEATHER CONDITIONS AND EMERGENCY

15.56.1 In the event of temporary suspension of work or during inclement weather, or whenever the Engineer shall direct, the Contractor and subcontractors shall provide an enclosure or special protection from weather and will cause his subcontractors to protect carefully his and their work and materials against damage or injury from the weather without additional cost to the City. If, in the opinion of the Engineer, any work or materials are damaged or injured by reason of failure of the Contractor or his subcontractors to protect their work, such materials shall be removed and replaced at the expense of the Contractor. Partial payments under the contract will not relieve the Contractor from this responsibility. When materials and work at the site which have been partly paid for are not adequately protected by the Contractor, such materials will be protected by the City at the expense of the Contractor, and no further partial payment will be made thereon.

15.56.2 The Contractor shall at all times (including nights, weekends or holidays) have a responsible person available to act in case of emergency repairs whom the Owner may contact. Upon notification of any emergency work necessary, the Contractor's representative shall immediately take steps to make such repairs as may be required.

15.56.3 In case of any emergency which threatens loss or injury of property and/or safety or life, the Contractor will be allowed to act, without previous instructions from the Engineer, in a diligent manner. He shall notify the Engineer immediately thereafter. Any claim for compensation by the Contractor due to such extra work shall be promptly submitted to the Engineer for approval.

15.56.4 Where the Contractor has not taken action but has notified the Engineer of an emergency threatening injury to persons or damage to the work or any adjoining property that is not in any way related or due to the Contractor's work, negligence or performance, he shall act as instructed or authorized by the Engineer. The amount of reimbursement claimed by the Contractor on account of any emergency action shall be determined in the manner provided in the item entitled "Changes in Work" in these specifications.

15.57 MOBILIZATION

15.57.1 This work consists of preparatory work and operations, including those necessary for movement of personnel, equipment, supplies, and incidentals to the project site; the establishment of offices, buildings, and other facilities necessary for work on the project; the cost of bonds and any required insurance; and other preconstruction expenses necessary for start of the work, excluding the cost of construction materials.

15.57.2 Mobilization costs shall not exceed 5% of the total bid price. Bidders found to have exceeded this requirement will have their mobilization costs adjusted down to meet the 5% requirement with all other unit costs remaining the same.

15.58 SURVEYS, LINES, GRADES, STAKES AND TEMPLATES

15.58.1 The Contractor shall be responsible for providing construction staking and for verifying the accuracy of all construction staking prior to the beginning of construction. The Contractor's execution of the work shall conform with any and all requirements stated or shown in encroachment permits, easement descriptions and/or plats applications to the work.

15.58.2 Coordinates on the plans are based on South Carolina State Plane Coordinate System: NAVD 88 Vertical Control and NAD 83 Horizontal Control unless otherwise noted. The data collection methods used for this project may be survey grade, mapping grade GPS equipment and/or a combination of both.

15.58.3 There shall be no additional payment for this item, the cost of which shall be included in other bid items.

15.59 CLEAN UP AND RESTORATION

15.59.1 As the work progresses, disturbed areas shall be completely restored at a rate consistent with the rate of the utility installation. There shall never be any more than 400 linear feet of unrestored trench from pipe installation, as measured along the trench line. All work in this area must be completed including the reestablishment of permanent services, closing of all excavated pits, restoration of pavement, shoulders, ditches, etc. prior to continuation of project. This distance shall not be exceeded without prior approval of the Engineer.

15.59.2 The Contractor shall clean up frequently and dispose of all surplus materials and refuse, rubbish, scrap materials, false work, temporary structures, foundations and debris of every nature caused by his operations, to the end that at all times the site of the work shall present a neat, orderly and workmanlike appearance.

15.59.3 The Contractor shall store his apparatus, materials, supplies and equipment in such orderly fashion at the site of the work as will not unduly interfere with the progress of his work or the work of any other contractors.

15.59.4 Upon completion of the work, the Contractor shall restore to pre-existing or better condition all public and private property and areas damaged and/or disturbed by, during or as a result of construction activities. Areas should be restored as soon as possible or as directed by the Engineer or City Inspector.

15.59.5 Damage to areas of undeveloped land shall be kept to a minimum. All necessary action should be taken to avoid disturbing or destroying plants and animals that are protected by Local, State, and/ or Federal governments.

15.59.6 All grass areas that are disturbed must be replaced with sod of the same type of grass. Seeding such areas is unacceptable. The Contractor will be solely responsible for adequately watering the new sod 3 times a week for the first 2

weeks once the sod has been placed.

15.59.7 The Contractor shall be responsible for cleaning equipment and disposing of unused material in a workmanlike manner and shall inform the Engineer of his plans prior to working.

15.59.8 Combustible, worthless matter will be disposed of in a manner consistent with Air Quality Control and Solid Waste Management Ordinances and State regulations as designated by the Engineer and approved by the appropriate authorities.

15.59.9 There will be no direct payment for clean up. All costs associated with restoration shall be included in the unit price as indicated on the Bid Form.

15.60 USE OF EXPLOSIVES

15.60.1 Should the Contractor elect to use explosives to loosen rock or for any other purposes in the prosecution of the work, he shall obtain the required permits and the written permission of the Engineer. The City Fire Chief and Police Chief shall be notified. If construction is outside the City Limits, the Contractor shall be responsible for determining whether a County permit is required and for obtaining any permit so required. The Contractor's methods and procedures in the transportation, handling, storage and use of explosives shall comply with requirements of Federal and State laws, County regulations, if applicable, City regulations, the Standard Fire Prevention Code and O.S.H.A. Rules and Regulations. The Contractor shall be responsible for and shall repair at his expense any damage caused by lasting or accidental explosions.

15.60.2 Blasting for excavation will be permitted only after securing the approval of the Engineer and only when proper precautions are taken for the protection of persons and property. The hours of blasting will be fixed by the Engineer. The Contractor' methods and procedures in blasting shall conform to requirements of laws and regulations listed in the paragraph above.

15.61 SEDIMENT AND EROSION CONTROL

15.61.1 During construction, protective measures shall be taken and maintained to minimize silting and road shoulder erosion in disturbed areas and adjacent to the work being performed during construction. The Contractor shall fully comply with the South Carolina Land Resources Conservation Commission's Standards for Stormwater Management and Sediment Reduction, the South Carolina Department of Health and Environmental Control's Standards for Stormwater Management, the Richland County's Sediment and Erosion Control Ordinance, and the City of Columbia's Sediment and Erosion Control Ordinance as applicable. The Contractor shall furnish all erosion control devices and take any erosion control measures necessary to comply with these ordinances and standards. Fines assess to the City of Columbia due to the Contractor's noncompliance with the stormwater management requirements will be deducted from the Contractor's pay estimate.

15.61.2 The Contractor must perform inspections on sediment and erosion control devices daily at locations that are disturbed by construction activities including, but not

limited to, storage areas, at discharge locations and at vehicle exit and entrance site locations. Observed deficiencies shall be corrected immediately.

15.61.3 **The Contractor must protect ALL storm drain structures and systems from sediment and debris. If excavated material or fill material washes into existing storm drainage systems and/or yards, the Contractor shall be responsible for immediate clean-up at no additional cost to the City.** All materials must be covered by a thick plastic to prevent dust and erosion. The Contractor shall prevent all construction materials including, but not limited to, wood materials such as form work, macadam base, stone, concrete materials, soils, concrete and flowable fill truck washouts, steel debris, cardboard, etc. from entering the storm drainage system.

15.61.4 All excavated material and/or delivered materials (macadam base, stone, etc.) must be covered by methods that will prevent dust and erosion. The Contractor shall use all means necessary, throughout construction of the project, to prevent dust from becoming a nuisance to the public, to neighbors, and to other work being performed on or near the site.

15.61.5 All costs associated with sediment and erosion control shall be included in other bid items.

15.62 <u>CONSTRUCTION NEAR OR UNDER DRAINAGE PIPES, SEWERS, & DITCHES</u>

15.62.1 Special attention shall be given to construction near existing drainage ditches. The Contractor shall be responsible for re-establishing proper drainage in the area to the satisfaction of the Engineer. Shoulders, side slopes and bottoms of disturbed drainage ditches shall be re-established to proper grade and cross section and properly stabilized by grassing as specified. In addition, all drain pipes shall be cleared.

15.62.2 There will be no direct payment for any costs associated with this work, the cost of which shall be included in other bid items.

15.63 <u>UNCLASSIFIED EXCAVATION/ GEOTECHNICAL INVESTIGATION</u>

15.63.1 All excavation is unclassified. No borings or soil investigations have been done by the City of Columbia. The Contractor shall assume all risks of unforeseen ground conditions encountered and shall be responsible for completing the project as specified regardless of these conditions.

15.63.2 If any subsurface condition information is available to the City, it will be made available for examination by prospective bidders. However, it is understood and agreed that the City shall in no way be held responsible for interpretation of this information, its accuracy or its thoroughness. Prospective bidders shall make such subsurface explorations as they believe necessary to verify and supplement information received from the City.

15.63.3 No direct payment will be made for rock excavation, if encountered, or varying ground conditions that may affect the Contractor's ability to complete the work.

Rock shall be excavated to a depth of six (6) inches below the bottom of the pipe subgrade elevation as shown on the plans or as directed by the Engineer. The Contractor shall backfill to the subgrade elevation with suitable materials approved by the Engineer. Such material shall be properly compacted and shaped into the required elevation and cross section. The cost of these items will be included in the other bid items.

15.63.4 When the removal of existing structures or materials is classified separately as a contract pay item, payment will be made in accordance with the contract price; otherwise, such work will be considered as incidental work and will not be paid for directly, but its cost shall be included in the unit price for other items of work. In either case, such price or prices shall be full compensation for all labor, materials, tools, equipment, and incidentals necessary to complete the work.

15.64 EXCAVATION AND TRENCH STABILIZATION

15.64.1 Where work space will permit, trenches may be excavated by machine, provided that by so doing, public and private improvements will not be subjected to an unreasonable amount of damage; otherwise, hand excavation shall be employed.

15.64.2 The trench shall be so braced and drained that the workmen may work in it safely and efficiently. A trench box or trench shield may be used in lieu of sheeting when permitted by O.S.H.A. When close-sheeting is used, it shall be so driven as to prevent adjacent soil from entering the trench either below or through such sheeting. Sheeting and bracing that have been ordered left in place shall be cut off at the elevation ordered by the Engineer. Trench bracing, except that ordered left in place, may be removed when the backfilling has reached the respective levels of bracing. Sheeting, except that ordered left in place, may be removed after the backfilling has been completed or has been brought to an elevation that permits its safe removal.

15.64.3 The width of the trench shall be ample to permit the pipe to be laid and joined properly, and the backfill to be placed and compacted as specified. Trenches shall be of such extra width, when required, as will permit the convenient placing of timber supports, sheeting and bracing, and handling of specials.

15.64.4 All excavated material shall be piled in a manner that will not endanger the work and that will avoid obstructing sidewalks, driveways and travel lanes. Fire hydrants under pressure, valve pit covers, valve boxes, curb stop boxes and other utility control shall be left unobstructed and accessible. Gutters shall be kept clear or other satisfactory provisions made for street drainage. Natural watercourses shall not be obstructed.

15.64.5 Where the excavation is carried beyond or below the lines and grades given by the Engineer, the Contractor shall, at his expense, refill all such excavated space with suitable material as approved by the Engineer.

15.64.6 Any costs associated with trench stabilization including but not limited to use of sheeting, shoring, bracing, and trench boxes shall be borne by the contractor. There will be no direct payment for this item, the cost of which shall be included in the unit bid prices for pipe installation.

15.65 DEWATERING

15.65.1 The Contractor shall keep trenches and excavated areas as well as the construction site free from water. The Contractor shall remove all water, including rainwater, encountered during trench and sub-structure work by pumps, drains, and other approved methods.

15.65.2 A dewatering system of sufficient capacity to remove water on a continuous basis shall be provided. Dewatering shall be performed in such a manner that removal of soil particles is held to a minimum. The discharge of dewatering shall be conducted into a sediment trap that complies with the requirements of all erosion and sediment control standards mentioned in these Contract Documents. No sanitary sewer shall be used for disposal of trench water.

15.65.3 There will be no direct payment for dewatering, the cost of which shall be included in bid prices for pipe installation. The Contractor shall maintain access to adjacent areas at all times.

15.66 BACKFILLING

15.66.1 The Contractor shall be solely responsible for determining all existing soil conditions. Where the excavated material is unsuitable backfill material, the Contractor shall provide select backfill material. **There will be NO direct payment for providing and compacting selected backfill material or for the proper disposal of the unsuitable backfill material**. Thus, it is extremely critical that the Contractor takes whatever steps he deems necessary to determine all existing soils and conditions so that he can bid accordingly. All material used in backfilling shall be a selected soil that meets all SCDOT specifications. A Soils Testing Company must approve ALL selected backfill material as meeting all SCDOT standards and specifications and provide written confirmation to the Engineer and the SCDOT. At the time of use, the selected granular backfill shall be free of frozen lumps and foreign materials that may have become mixed with it during handling.

15.66.2 All selected backfill material shall be placed and compacted in a maximum **of 6-inch lifts** and shall be tested by an approved Soils Testing Company to determine the compaction. A qualified technician shall acquire samples of soil to perform moisture-density tests according to ASTM D698. During backfilling, a minimum of one moisture- density test and maximum of two moisture-density tests shall be performed per lift for every 500 feet of construction. Each 6-inch lift must have a minimum compaction of 95% the standard Proctor maximum dry density. If at any time a representative from the City and/or SCDOT arrives on site and finds the Contractor backfilling material in greater lifts than 6-inches, the Contractor shall remove all selected backfill material within the last 300 L.F. of the trench and begin proper backfilling and compacting again, all at the Contractor's expense.

15.66.3 The Contractor shall submit all soils testing results to the City and SCDOT in a timely fashion. The reports shall include the location where the soil was tested, a description of the types of soils used in backfilling for each road and a written confirmation that all of the selected backfill soils meet all SCDOT standards,

signed and dated by the certified tester.

15.66.4 It shall be the responsibility of the Contractor to hire a Soils Testing Company and to pay for all testing and analysis needed to meet all requirements of these specifications and the requirements of the SCDOT.

15.66.5 There will be no direct payment for this, the cost of which will be included in other bid items. There will be NO additional payment for ANY additional material that may be needed due to slumping of trench walls.

15.67 FLOWABLE FILL

15.67.1 Flowable fill used as backfill shall be in accordance with SCDOT Standard Specifications for Highway Construction, latest edition and latest supplemental technical specifications. Flowable Fill Mix Designs along with compressive test results from the same mix design shall be submitted for approval by the City of Columbia prior to the start of construction.

15.67.2 The selection of flowable fill shall be as specified or otherwise approved by the Engineer. The Contractor is responsible for producing a mix design that is excavatable per SCDOT requirements. The Contractor shall provide the Engineer a certification from the supplier stating that it meets these requirements. The Contractor shall provide sampling and testing results of flowable fill and the materials used to produce it at the discretion of the Engineer at no additional cost. The expected 28-day compressive strength is 150 psi maximum. If the compressive strength exceeds this strength, the Contractor shall redesign the mix so that the compressive strength is not exceeded. The flowable fill shall exhibit no settlement. The Contractor shall use all necessary construction techniques to assure that the finished material will perform as intended.

15.67.3 All delivery tickets for flowable fill placed on the project shall be submitted for review. Each ticket shall contain the project designation, date, time, class and quantity of flowable fill, proportions of actual ingredients, quantity of water withheld and quantity of water added prior to placing on the project. Each ticket shall be signed by the deliverer and Contractor indicating that the material meets the specifications and that all information provided is correct. All mixes that do not meet SCDOT specifications, including the compressive strength, whether determined by test results or by field observations, will be rejected by the City.

15.67.4 Flowable fill shall be used as backfill in areas where trenches are within three (3) feet from the edge of the pavement and in open cuts along or across roadways. Flowable fill shall be placed up to the bottom of the base course or street repair as applicable.

15.67.5 Payment for flowable fill backfill used in the paved roadway will be included and paid for in the appropriate bid item on the Bid Form. The Contractor shall provide actual quantities of flowable fill used as backfill material on this particular job by furnishing the Engineer all flowable fill delivery tickets with the particular job and job number typed on each ticket, the date the flowable fill was placed and the location in which it was placed at the time the work is accomplished. ***OR-*** There will be no direct payment for the use of flowable fill.

15.68 MAINTENANCE OF TRAFFIC

15.68.1 The Contractor shall implement the traffic control plans as provided as a part of this project in accordance with the SCDOT standard specifications, the Manual On Uniform Traffic Control Devices (MUTCD), and all addenda to date. All proposed changes to traffic control plans shall first be approved by the City of Columbia, SCDOT, and/or Richland County before implementation. The Contractor may implement Traffic Control only after receiving approval from the Engineer. The Engineer will not be responsible for delays to the Contractor due to his failure to abide by this requirement.

15.68.2 The Contractor is responsible for furnishing, installing and maintaining all signs, construction barricades, supplemental warning lights, cones, drums, flashing arrow boards, arrow boards with truck-mounted attenuators, changeable message signs, truck-mounted "Prepare To Stop" signs, temporary concrete barriers and pavement markings as required through the duration of the project in accordance with the MUTCD, the SCDOT Standard Specifications for Highway Construction, and the Special Provisions. All traffic control devices shall be kept operational when in use and all signs shall be kept legible and plumb day and night during their use.

15.68.3 In the event the Engineer finds Traffic Controls are not being provided as outlined, then the Contractor will be notified. If the condition is not promptly corrected, then all work shall be suspended until such conditions are corrected. During such suspension, the charging of work time shall be continued. The Engineer shall have the authority to withhold partial payment for any work on this contract if traffic control is not being provided in accordance with the Special Provisions.

15.68.4 The Contractor shall provide flaggers near all intersections or any areas of this project where construction and/or equipment create a "blind spot" for oncoming or turning traffic.

15.68.5 The Contractor shall be required to provide individuals who are properly trained in traffic control practices. The job duties of these individuals shall be restricted to providing quality assurance of the traffic control installation. The Contractor shall be required to have a person in charge of the traffic control on the job site at all times when construction activities are in progress.

15.68.6 Maintenance of traffic control devices shall be performed in accordance with these Specifications and as deemed necessary by the Engineer. When maintenance of traffic control devices is required, the Contractor shall be required to give the Engineer a prior notification before conducting any maintenance activities. Traffic control maintenance performed without proper notification may be rejected by the Engineer. Also, traffic control maintenance performed without proper notification or which fails to meet required performance levels due to poor workmanship and/or factory defects shall be rejected and corrected at the Contractor's expense. The Engineer shall immediately notify the Contractor and the Contractor shall be required to begin corrective measures immediately.

Failure to comply with these requirements shall result in an immediate suspension on all work.

15.68.7 **It is the Contractor's responsibility to notify property owners, in writing, at least seven (7) business days in advance of any inconvenience, which will be caused to each owner due to construction. The Contractor's contact name and telephone number shall be included in the written notice. The Contractor shall not cut off access to any more driveways than is absolutely necessary at any given time.**

15.68.8 The Contractor shall be responsible for the immediate removal of such traffic hazards as mud, debris, loose stone, and trash as may be washed or spilled on the traveled roadway as a result of the construction work.

15.68.9 Storage of material and equipment shall not be permitted within 15 feet of a travel lane unless in an area protected by guardrail or temporary concrete barrier.

15.68.10 In addition to the limitations in the plans, the City Inspector and/or Engineer may further restrict the length of roadway on which the Contractor may work.

15.68.11 All construction exposed to pedestrian traffic including, but not limited to, temporary by-pass piping, temporary service connections, pits and trenches shall comply with all requirements as set forth by the most recent version of the American with Disabilities Act and the MUTCD.

15.68.12 No individual measurement will be made of temporary construction signs, traffic cones, drums, warning lights, arrow boards, arrow boards with truck-mounted attenuators, changeable message signs, truck-mounted "Prepare to Stop" signs, flaggers, or construction barricades. These items and all costs associated with traffic control will be included in the lump sum for Traffic Control.

15.69 ACCESS ROADS

15.69.1 All streets, roads and drives used by the Contractor for access to and from the site of his work shall be protected from damage. If the areas are disturbed during construction of the project, they shall be restored to their preconstruction condition or better, unless noted otherwise. Any such damage done shall be repaired immediately, and left in good condition at the end of the construction period.

15.69.2 Where the work is not accessible from existing streets and roads, the Contractor shall prepare necessary roads, and grade or otherwise smooth irregular terrain, along the right-of-way and/or easement so that material and power equipment may be moved to and operated on and along the site. Any work done under the foregoing requirements will be subject to the Engineer's approval. Easements and/or permission to construct such roads must be in the possession of the contractor.

15.69.3 There will be no direct payment for this work. The costs of this work shall be included in other bid items.

15.70 INGRESS AND EGRESS TO PUBLIC OR PRIVATE PREMISES

15.70.1 At crossings and other locations as may be directed by the City Engineer, open trenches shall be bridged in a secure manner to prevent interruption of travel upon roadways, sidewalks and driveways to public or private premises. The material used and the mode of constructing such bridges and approaches must be satisfactory to the Engineer. The cost of all such work must be included in the unit bid prices for other items.

15.71 RIGHTS-OF-WAYS AND EASEMENT CLEARING

15.71.1 The right-of-ways and/or easement areas are intended to provide reasonable access and working area for efficient operations to be performed within the restrictions shown on the plans. The Contractor shall be responsible for organizing his operations to perform within the restrictions shown on the plans.

15.71.2 The Contractor shall clear only that portion of the rights-of-ways and/or easements necessary for construction of the project, including removing and replacing or disposing obstructions. Obstructions may include, but not be limited to, signs, lights, mailboxes, walls, fences, buildings, debris, brush and trees, including stumps, etc. The work shall be performed in strict accordance with easement agreements and/or permits between the City and property owners and the Contractor shall maintain proper barricades and watchpersons to keep the public and utilities safe during these operations. Precautions shall be taken by adequate sheeting or other approved method to prevent any cave-in or disturbance beyond the easement or right-of-way limits or damage to improvements within the easement and/or right-of-way. No object, tree, building, structure, etc. partially encroaching on the right-of-way and/or easement, or located so as not to interfere with the construction operations shall be removed unless specifically noted on the plans or as directed by the Engineer.

15.71.3 The Contractor shall take all precautions to avoid disturbing areas outside of the scope of work covered in the Contract Documents. If it is found that the Contractor damaged areas outside of the work covered in the Contract Documents due to negligence as determined by the Engineer and/or City Inspector, the Contractor shall be solely responsible for all repairs at no additional cost to the City.

15.71.4 The Contractor shall familiarize himself with the existing conditions and be prepared to adequately care for and safeguard himself and the Owner from damage. It is the practice of the City to permit property owners to extend their terraces, lawns, shrubbery and other plantings into the right-of-way of the street. The Contractor is strongly advised to review the existing landscaping within the proposed construction area. Trees and shrubbery in developed areas and along the trench line shall not be disturbed unless absolutely necessary, and subject to the approval of the Engineer. The Contractor shall take all measures necessary to preserve and replant all ornamental shrubbery and trees that absolutely require removal. Any deciduous tree or ornamental shrubbery damaged by the Contractor will be replaced and replanted with the same variety and of similar size at the Contractor's expense. Ornamental shrubbery and tree branches shall be

temporarily tied back, where appropriate, to minimize damage. Trees which receive damage to branches shall be trimmed of those branches to improve the appearance of the tree. Tree trunks receiving damage from equipment shall be treated with a tree dressing. The Contractor will be required to maintain replaced and/or replanted trees and shrubbery for a period of 12 months and any other work deemed necessary by the Engineer.

15.71.5 Where trenches cross private property through established lawns, sod shall be neatly cut, removed, carefully stored, kept watered and maintained in suitable condition until it is replaced by the Contractor. All topsoil, whether underlying lawn areas or not, shall be removed for its full depth and kept separate from general excavated materials until it is replaced. All grass areas that are disturbed must be replaced with sod of the same type of grass; seeding such areas is unacceptable. The Contractor will be required to do all maintenance necessary to keep sodded areas as well as all plants in a satisfactory condition during construction and for a period of twelve (12) months after final payment. This shall include, but not be limited to, trimming, mowing, repairing washes, replacing plants, and applying: topsoil, sod, fertilizer, and/or mulch to areas where a satisfactory stand of grass has not been achieved. Once sod is replaced, the Contractor shall be responsible for adequately watering the sod three times a week for two weeks.

15.71.6 The Contractor will be responsible for locating and protecting private underground irrigation systems along the route and for any damage caused and the workmanship of the repair to these systems in the prosecution of his work under this contract.

15.71.7 At all locations where existing fences must be removed to permit construction of the project, the Contractor shall remove such fences and reset the fences in their original location and condition. Fences shall be replaced on the same day as removed. As necessary, the Contractor shall provide such temporary fencing, or employ other safeguards, as required to prevent animals from wandering to other lands.

15.71.8 No additional trees outside the easement or construction area shall be removed without the approval from the Engineer. Before any tree is cut down, the tree shall be completely topped in an acceptable manner approved by the Engineer so as to protect all utilities, public and private properties. All trees so cut shall be sawed into commercial lengths and stacked adjacent to the right-of-way and/or easement for the property owner if required or requested by the owner. The Contractor shall be responsible for removing branches, foliage, stumps, brush, and other debris resulting from the clearing of the construction site. If any structures and/or utilities are damaged during the removal of a tree or brush, the Contractor shall replace the damaged portions at his/her own expense as directed by the Engineer.

15.71.9 The Contractor shall furnish, maintain and operate at all times such equipment as is necessary to keep the streets and easements along the construction route in good condition throughout the life of the contract. All material piles, equipment and pipe which may serve as obstructions to traffic shall be enclosed by fences or

barricades and shall be protected by proper lights when the visibility is poor. The rules and regulations of O.S.H.A. and appropriate authorities respecting safety provisions shall be observed.

15.71.10 There shall be no direct payment for this work. All costs associated with this work including, but not limited to, labor, materials, equipment and apparatus not specifically mentioned herewith or noted, but which are incidental and necessary to complete the work shall be included in other bid items. Any structures or items damaged shall be replaced at the Contractor's expense.

15.72 EXISTING UTILITIES AND STRUCTURES

15.72.1 **NO UTILITY LOCATIONS OR FIELD VERIFICATION HAS BEEN PERFORMED.** The following may exist in the construction areas: water works, storm drainage, sewer mains, gas mains, telephone, fiber optics, power lines & power poles, sprinkler systems, and other utilities. The Contractor shall familiarize himself with the existing conditions and be prepared to adequately care for and safeguard himself and the Owner from damage.

15.72.2 The Contractor shall proceed with caution when performing excavation of any kind so that the exact location of underground structures, both known and unknown, may be determined so as to not damage or disturb existing underground or above ground utilities. The Contractor must protect and support all utilities during execution of the work. There may be above ground and underground utilities in the designated work area; existing lines may not be shown on the plans. The approximate position of certain underground utilities is shown on the plans for information only. The Contractor shall locate these and other possible unknown utility lines by use of an electronic pipe finder, or other means he may prefer, and **shall excavate and expose all existing underground lines in advance of any excavation work under this contract. When the Contractor has located all utilities, he shall be responsible for planning and coordinating the required work around the existing utilities.**

15.72.3 Prior to proceeding with trench excavation, the Contractor shall contact the Palmetto Utility Protection Service, telephone 1-800-922-0983 and such other utility companies in the area as necessary to aid in locating above and underground services.

15.72.4 The Contractor is responsible for exact location of all utilities within and adjacent to the project areas. **The Contractor shall be solely responsible and liable for any damage (i.e. such as cutting or disturbing, etc.) to any utilities, services, poles and other structures resulting from or incident to the Contractor's performance of these projects and shall be replaced or repaired at the Contractor's expense.** The Contractor shall be responsible for notifying appropriate companies to protect or move the affected facilities, if any of the specified work is in the area of these affected facilities. However, in the event of a break in an existing utility, the Contractor shall immediately notify the responsible official of the organization operating the utility that it is interrupted. The Contractor shall lend all possible assistance in restoring services and shall assume all cost, charges or claims connected with the interruption and repair of

such service if the location of said utility was marked by the owner thereof prior to excavation.

15.72.5 The power and communication companies may require that all poles within 5 feet of construction be held in place during construction by their own forces, and will bill time and expenses. The Contractor is advised to familiarize himself with the proposed routing and location of utility poles before the submittal of bid.

15.72.6 All costs associated with "Existing Utilities and Structures" shall be included in other bid items and no additional cost will be considered.

15.73 INTERRUPTION OF SERVICE

15.73.1 No valve or other control device on the City of Columbia's or any utility company's existing utility systems shall be operated by the contractor without permission from the City Engineer or utility company's representative.

15.74 CONFLICTS WITH AND RELOCATION OF EXISTING UTILITIES

15.74.1 Existing utilities, utility poles and/or guy wires may be located near or across the proposed utility and/or may be located within the construction area. The Contractor shall be responsible for contacting the proper utility company and/or owner and for coordinating and performing all tasks necessary to construct the project in accordance with the Contract Documents. Tasks may include, but not be limited to, obtaining any and all permits, coordinating with the utility company for temporary and/or permanent relocations and/or supports, and for paying for all associated costs.

15.74.2 All utility adjustments must be coordinated with the Engineer and property owner prior to making the adjustments. The Contractor shall make advanced arrangements with property owners if utility service is to be interrupted at any time.

15.74.3 Utility companies may bill for time and expenses for the above items. **All of the above costs, including utility relocation, utility support, and/or potential repair should any utility be damaged during construction, shall be the responsibility of the Contractor.** The Contractor is specifically advised to familiarize himself with the proposed route and location of utilities before the submittal of the bid.

15.74.4 There shall be no direct payment for any costs associated with this work, the cost of which shall be included in other bid items.

15.75 ORDINANCE RELATING TO UTITLITY LINES IN STREETS

15.75.1 All installation of utility lines in streets shall conform to the following ordinance:

_____
***Cross references:** Utilities and Engineering generally, ch. 23.

_____

Sec. 22-131. Permit.

(a) *Required: submission of plans*. Prior to constructing any underground pipeline, utility line, cable line, etc., under a paved public street, a permit shall be secured from the office of the City Engineer. The request for the permit shall be accompanied by an appropriate drawing, if applicable, showing the location of the proposed utility installation and any other pertinent information necessary to determine conflicts with other utilities as requested by the City Engineer.

(b) *Specifications for construction*. The construction will be accomplished in accordance with specifications of the City Engineer.

(c) *Fee*. At the time of filing the application, a permit fee to cover inspection shall be paid to the City in the amount of $10.00.

(Code 1979, § 4-2102)

Sec. 22-132. Boring required on major streets.

Only bored on cased crossings shall be permitted within the paved portion of major or arterial streets, except when soil and other conditions make boring impractical as determined by the city Engineer, or when an emergency is deemed to exist. All crossings shall be a minimum of 24 inches below the paved surface unless otherwise specifically approved by the City Engineer.

(Code 1979, § 4-2102)

Sec. 22-133. Emergency cutting.

An emergency shall be deemed to exist when the preservation of the peace, health and safety of the City and its inhabitants are jeopardized. The determination of an emergency shall be made by an official of the utility designated in writing filed with the city Engineer. In crossing a major or arterial roadway when it is deemed an emergency, a cut may be made only after written approval by the designated official of the utility, which must be forwarded to the City Engineer within 24 hours after the cut is made. A paving cut permit fee to cover inspection shall be charged, and the applicant shall be responsible for permanent repair of the cut in accordance with the current specifications.

(Code 1979, § 4-2103)

Sec. 22-134. Inspections.

Line, boring or paving cut repairs must be inspected and approved by the City Engineer upon completion of the project and again one year from that date, during which period the permit

applicant and/or owner shall remain liable for the cost of repairs and any damages which may be due the City arising from such work.

(Code 1979, § 4-2105)

Sec. 22-135. Bond. <u>(This section does not apply to projects under City contract)</u>

In addition to the permit fee to cover inspection, the applicant for a permit under this article shall file with the City Clerk a bond in the sum of $5,000.00 approved by the City Manager and the City Attorney as to form.

(Code 1979, § 4-2105)

Sec. 22-136. Payment of costs of construction and relocation.

Prior to construction of any underground utility line, pipeline, cable line, etc., under a paved street, the applicant shall agree as a condition of the permit that the underground utility line, pipeline, cable line, etc., shall be constructed at the applicant's sole risk and expense, and that upon demand by the City, when such demand is deemed necessary for a public street purpose, any underground utility line, pipeline, cable line, etc., shall be relocated by the applicant at the applicant's sole expense.

(Code 1979, § 4-2106)

Sec. 22-137. Underground utilities.

It shall be unlawful to erect, construct, maintain or use any pole, overhead wires or associated structure for new service or in replacement of existing service, excepting such poles as are necessary to support street lighting, traffic signals, and transmission lines above 43,000 volts.

(Ord. No. 2005-012, 2-16-05)

Secs. 22-138—22-160. Reserved.

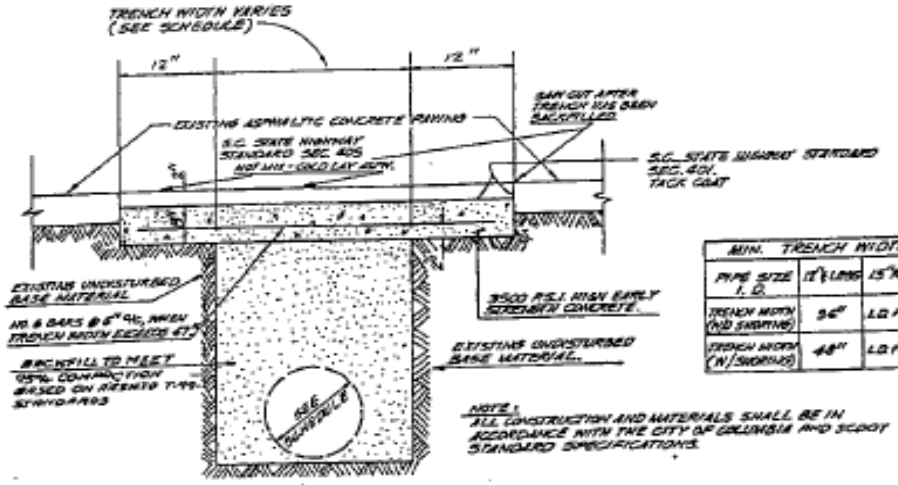

MIN. TRENCH WIDTH SCHEDULE					
PIPE SIZE I.D.	12" (LESS)	15" TO 21"	24" TO 30"	33" TO 66"	72" (OVER)
TRENCH WIDTH (W/O SHORING)	36"	I.D. + 24"	I.D. + 30"	O.D. + 30"	O.D. + 36"
TRENCH WIDTH (W/SHORING)	48"	I.D. + 36"	I.D. + 42"	O.D. + 42"	O.D. + 48"

TYPICAL PERMANENT REPAIR SECTION

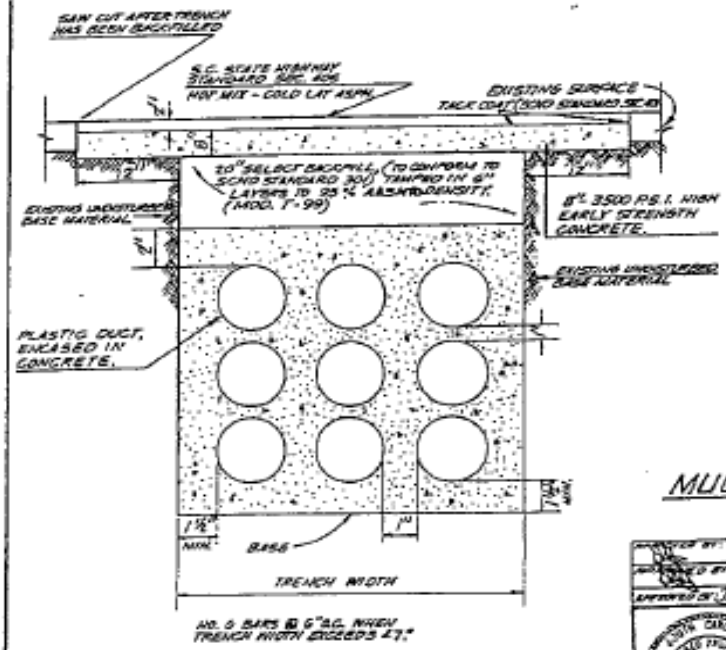

TYPICAL MULTI-DUCT SYSTEM

		REVISION - TRENCH WIDTH CHANGED FROM "MIN." TO "MAX."
		REVISION: TRENCH WIDTHS REVISED
		TITLE & COMPACTION CHANGE, MIN. & MAX. ADDED TO DIMENS.

CITY OF COLUMBIA
DEPARTMENT OF ENGINEERING
COLUMBIA, SOUTH CAROLINA

SCALE: NONE
DATE: AUG. 18, 77
DRAWN BY: AF

TYPICAL PERMANENT PAVEMENT REPAIR SECTIONS.

35-R-2

1 OF 1

15.76 REPLACING SHOULDER MATERIAL

15.76.1 Where utility lines are to be laid in the shoulder of paved streets and where shoulders have not been surface-treated, the Contractor will be required to remove and stockpile the select material used in the construction of the shoulders. If the removed material is select material, it shall be replaced and compacted to full depth of material in its original position. If the removed materials are not select materials and are unsuitable materials, the Contractor shall dispose of the unsuitable materials and backfill with compacted select materials. The Contractor shall supply at his own cost select material needed to supplement the select material so removed.

15.76.2 There will be no direct payment for this item, the cost of which shall be included in other bid items.

15.77 ASPHALT PAVING, REPAIRING AND/OR RESURFACING ROADWAYS

15.77.1 All asphalt materials, construction and its installation on SCDOT, County and/or City of Columbia streets shall comply with SCDOT standards and specifications, latest edition, and shall be the type shown on the plans, as described in the Special Provisions, as required by permits and/or as directed by the Engineer.

15.77.2 Before base is to receive a layer of hot mix asphalt (HMA), the subgrade and stone base, if applicable, shall be compacted to 100% Standard Proctor unless otherwise noted. A tack coat conforming to SCDOT standards must first be applied to the existing asphalt, saw cut edges, utility features, milled surfaces, etc.

15.77.3 The top surface of the new asphalt shall be flush with the top surface of the existing adjacent asphalt. There will be no valley or peak at the repair site due to the construction work or resurfacing of the roads. No resurfacing will be allowed over concrete gutter and feathering edges of resurfacing is prohibited.

15.77.4 Pavement conditions may vary over the scope of the project. Pavement replacement and repair shall be per the plans, permits, as directed by the Engineer, or shall match the pre-existing pavement type and thickness.

15.77.5 The Contractor shall hire a paving Contractor that meets all the requirements of SCDOT and the Contract Documents. The paving Contractor must be approved by SCDOT prior to paving any streets. The Contractor is responsible for obtaining approval prior to the start of the paving operations.

15.77.6 The Contractor is advised that the City of Columbia does **NOT** apply asphalt binder cost adjustments to asphalt paving, repairing and/or resurfacing roadways as well as any indirect asphalt related items associated with city utility projects.

15.77.7 Payment for this work shall be included in the unit bid item on the Bid Form and shall include all costs associated with the work such as labor, materials, equipment, hauling, disposal, and all apparatus not specifically mentioned herewith or noted, but which are incidental and necessary to complete the work specified.

15.78 REMOVING, MILLING AND DISPOSING OF ASPHALT PAVEMENT

15.78.1 All pavement to be removed and/or milled will be done in accordance with South Carolina Department of Transportation specifications, as shown on the plans and/or as directed by the Engineer.

15.78.2 Pavement Removal

15.78.2.1 All excavations and trenches in the existing roadway are to be saw cut to produce clean edges. If saw cut edges of roadway and patches are damaged during construction, they shall be saw cut again to produce clean edges. All pavements removed shall be properly disposed of by the Contractor and are not to be used as fill.

15.78.2.2 Measurement for payment will be measured per linear feet as indicated on the bid form. All costs associated with this work such as labor, materials, equipment, hauling, disposal, saw cutting and all apparatus not specifically mentioned herewith or noted, but which are incidental and necessary to complete the work specified shall be included in the unit bid price.

15.78.3 Milling

15.78.3.1 Where installation of the utility line is inside the paved area and the construction is generally paralleling the centerline of the roadway, or where shown on the plans and/or permit, the entire roadway shall be resurfaced. The Contractor shall mill the existing pavement at locations shown on the drawings to the depth and width indicated on the plans, permits, or as directed by the Engineer.

15.78.3.2 On streets with existing curb and gutter, the existing asphalt pavement shall be milled to a uniform depth below the edge of the gutter prior to resurfacing. The milled surface shall be reasonably smooth and free of scarification marks or other damages. All asphalt millings shall be properly disposed of by the Contractor.

15.78.3.3 Payment for this item shall be based on quantities determined by field measurements taken by the Contractor in the presence of the City Inspector and/or Engineer at the unit cost listed in the Bid Form and shall include all costs associated with the work such as labor, materials, equipment, hauling, disposal, and all apparatus not specifically mentioned herewith or noted, but which are incidental and necessary to complete the work specified.

15.79 REMOVE AND REPLACE CONCRETE AND ASPHALT DRIVES

15.79.1 All materials, construction and its installation on SCDOT, City of Columbia streets and right-of-ways and/or easements shall comply with SCDOT standards and specifications, latest edition, and shall match the type and thickness of the existing pavement, as required by permits, or as directed by the Engineer, unless otherwise noted herein.

15.79.2 Where trenches cross concrete and asphalt drives a minimum of six (6) feet from the expansion joint or change in pavement material, remove and replace the pavement from the edge of the trench to the road by saw cutting the pavement.

Where the trench cut is less than six (6) feet from the expansion joint, remove and replace the whole section of the drive to the first expansion joint. Where there are cracks in the pavement, saw cut a straight edge beyond the crack, remove and replace the pavement from the saw cut.

15.79.3 All openings in the existing pavement are to be saw cut so as to produce clean edges. If saw cut edges of existing pavement surface are damaged during construction, they shall be saw cut again to produce clean edges. All concrete and asphalt removed shall be properly disposed of by the Contractor. They are not to be used as fill.

15.79.4 The top surface of the new pavement shall be flush with the top surface of the existing adjacent pavement. There will be no valley or peak at the repair site due to the installation of the pavement or flowable fill.

15.79.5 Measurement for payment will be measured along the construction centerline as listed in the Bid Proposal and shall include labor, materials, testing, equipment and apparatus not specifically mentioned herewith or noted, but which are incidental and necessary to complete the work specified. There will be no additional payment for trench width due to soil conditions, obstructions, etc.

15.80 CONCRETE CURB AND GUTTER AND CONCRETE SIDEWALKS

15.80.1 Removed and/or damaged curb and gutters shall be replaced from joint to joint with 2500 psi concrete to the depth, section, and alignment of the existing curbs and gutters unless noted otherwise in the contract documents. Concrete shall be cut on a straight and true line, along expansion joints, using a powered concrete saw.

15.80.2 Removed and/or damaged sidewalks shall be replaced from joint to joint with 2500 psi concrete to the depth of the existing sidewalk, but not less than 4 inches unless noted otherwise in the contract documents. Concrete shall be cut on a straight and true line, along expansion joints, to a minimum depth of 2 inches, using a powered concrete saw. The remaining depth can be sheared off by use of pneumatic tools.

15.80.3 The Contractor shall provide all labor, tools, equipment and materials necessary to complete this work including, but not limited to, saw cutting, proper disposal of all debris and removed materials, hauling, proper preparation of the subgrade including compaction, form work, curing and all other operations necessary to complete the work..

15.80.4 Payment for this work may or not be made as indicated in the Bid Form for each project.

15.81 PAVEMENT MARKINGS

15.81.1 The Contractor shall apply temporary pavement markings as required in accordance with SCDOT specifications. Permanent pavement markings shall be thermoplastic in accordance with SCDOT specifications to match pre-existing markings including reflectors.

15.81.2 The Contractor shall use fast dry paint or thermoplastic for temporary pavement markings that are white or yellow in color as required that match pre-existing pavement marking patterns. Ensure that temporary markings are on SCDOT's Qualified Products Listing or have been tested and approved by the OMR and are in conformance with applicable SCDOT Specifications, SCDOT Standard Drawings, and the MUTCD.

15.81.3 The Contractor shall apply permanent thermoplastic pavement markings, with raised pavement markers (reflectors) as applicable, within the limits of the project to delineate the travel lanes, channel traffic and match pre-existing pavement markings on the final pavement surface course. Contractor shall ensure that permanent markings are on SCDOT's Qualified Products Listing or are certified as meeting SCDOT specifications (provide manufacturer's certification to the Engineer with the submittal) and are in conformance with applicable SCDOT Specifications and Standard Drawings and the MUTCD.

15.81.4 The Contractor shall apply temporary and permanent markings that are the color, pattern, width and length prescribed by the MUTCD, SCDOT and/or the Engineer as applicable. This work includes supplying all necessary labor, equipment and materials for the correct application of the marking material to the pavement surface and protecting pavement markings during installation.

15.81.5 Do not apply paint that is more than 12 months old.

15.81.6 Ensure that the markings are straight and uniform in curvature and conform uniformly to tangents, curves and transitions. Make certain that symbols and markings are of the dimensions shown in the SCDOT Standard Drawings and the MUTCD or as directed by the Engineer.

15.81.7 There shall be no direct payment for temporary pavement markings, for establishing control points or guides for applying pavement markings, for removing existing pavement markings or for repairing damage to pavement surfaces that occurred during the construction operation. This work is considered incidental to the work under this section and the cost of which shall be included in other bid items. There may or may not be payment for permanent pavement markings as indicated on the Bid Form.

15.82 PROTECTION OF TREE ROOT ZONES WITHIN STREET RIGHT-OF-WAY

15.82.1 The tree root zone is defined as the area extending outward from the face of the tree in all directions a distance of one (1) foot for each inch of diameter of the tree trunk measured 4.5 feet above the natural ground surface. Trenches shall not be permitted within this zone.

15.82.2 All pipes, conduits and similar underground structures shall be installed by the dry bore method. The minimum ground cover over the top of such pipes or conduits shall be 24 inches. Dry bores shall be placed as shown on detail DB-1 attached hereto.

15.82.3 Installations of Tree Protection Barrier

15.82.3.1 A tree protection barrier shall be constructed around each existing tree that is to remain on site. Each barrier shall be constructed immediately after the demolition and hand removal of pavement within ten feet of the tree and BEFORE any additional demolition – or construction- related activities occur.

15.82.3.2 The established protected perimeter around the tree shall be based on one foot in radius per one inch of the tree diameter as measured 4.5 feet above grade (e.g. A seven inch diameter tree will have a protected area with a 7 foot radius and 14 foot diameter around the tree.) unless shown otherwise on the plans.

15.82.4 Demolition Near Trees

15.82.4.1 Concrete and other pavement within a ten-foot radius of the tree trunks shall be broken up with a jackhammer and removed to prevent root and root crown injuries. Attempts to lift large sections of concrete near the tree would likely result in lifting of roots and abrasion injuries and shall be avoided.

15.82.4.2 Pavements outside the ten-foot radius can be lifted in large sections provided they are not dragged or pushed into the tree trunk or major roots. Care must be taken to prevent demolition equipment such as loaders from striking the tree canopy or trunk.

15.82.4.3 When removing/loading demolition debris, loaders shall not scoop materials from below the existing grade, thereby avoiding inadvertent digging and damage in the root area.

15.82.4.4 Once pavements have been demolished and removed, no equipment shall be permitted to park or idle under the canopy of the trees, thereby avoiding soil compaction, mechanical damage to surface roots and heat injury from exhaust to tree canopies.

15.82.4.5 The removal of electric conduits and water standpipes that have grown into the trunks and root systems could damage trees. Pipes and conduit shall be cut off close to the tree; do not remove portions underneath the bark or wood. Do not remove bark growing around the pipe, conduit or other attachments.

15.82.4.6 Any overhead poles or other infrastructure removed near trees shall not be pushed or allowed to fall into the canopies. Equipment used to remove these items shall not operate from under a tree canopy.

15.82.5 Methods of Excavation Near Tree:

15.82.5.1 For the installation of utility lines the contractor shall consult with the City of Columbia Forestry and Beautification Division prior to trenching to establish an acceptable method of excavation. The City of Columbia Construction Administrator and /or Forestry and Beautification Department shall approve the method of excavation and shall be one of the methods described in this section.

15.82.5.2 Equipment for Excavation Near Roots

15.82.5.2.1 Air Spade – Soil excavation near tree roots and/or to determine location of tree roots in the areas outline below shall be conducted with a model 2000 Air Spade equipped with a 225 scfm ($6.2^{3/}$ min.) nozzle. Further specifications for this spade and ordering information is available.

15.82.5.2.2 Compressor – The Air Spade and nozzle combination listed above requires a 250 scfm or greater air compressor. Air compressors with less pressure will overheat during use and cause poor tool performance.

15.82.5.2.3 Sewer Vacuum – A sewer vacuum can be used to remove the soil dislodged by the Air Spade if it cannot be easily blown clear of the hole or trench.

15.82.5.2.4 Boring under tree roots shall be an acceptable method for excavation for the installation of utilities in order to avid cutting roots. Bores shall be at a minimum depth of 30".

15.82.5.3 Interval Exploratory or Test Trenches shall be dug with the Air Spade to determine the location of roots before any digging within the established protected perimeter area around the tree based on a radius equal to one foot per one inch of tree diameter as measured 4.5 feet above grade.

15.82.6 Test trenches

15.82.6.1 Test trenches shall be eight inches deep and four to six inches wide.

15.82.6.2 Root Conflicts

15.82.6.2.1 When roots are encountered in test trenches, they shall not be cut if they are larger than 2 inches in diameter or are closer than the established protected perimeter area around the tree based on a radius equal to one foot for every inch of tree diameter as measured 4.5 feet above grade (e.g. A seven inch diameter tree will have a protected area with a 7 foot radius and 14 foot diameter around the tree.).

15.82.6.2.2 Roots smaller than 2 inches in diameter that must be severed shall be cut with a hand pruning saw.

15.82.6.2.3 Paints and wound treatments shall not be used on any cut surfaces.

15.82.7 Soil and Material Storage – No excavated soils, fill dirt, amended soils or other materials shall be stored under the canopy of any protected trees.

15.82.8 Avoiding Tree Trunk and Branch Damage

15.82.8.1.1 Mechanical - Care shall be taken not to contact the canopy when operating large equipment or vehicles in the proximity of any protected trees.

15.82.8.1.2 Heat – Equipment and trucks shall not be operated or left idling under the canopy of any protected trees, so that no damage occurs from radiant heat or exhaust. Paving equipment is particularly damaging and shall not be operated under the tree canopies any longer than is required to pave the area.

15.82.9 Uncovered Roots – When roots have been excavated, but not cut, they shall not remain uncovered for more than two days.

15.82.10 Severed Roots – Roots that have necessarily been pruned shall be recovered with soil within one hour.

15.82.11 Installation of Utilities Near Trees

15.82.11.1 Traffic Light Poles – Because installation of traffic light poles near trees has a high likelihood of causing damage to the tree branches and major roots, an arborist from the City of Columbia Forestry & Beautification Department shall be on site when this work is being done.

15.82.11.2 Buried Wiring and Plumbing Near Trees – Wiring for the streetlights or traffic lights, communication conduits, or plumbing for irrigation which is in conflict with roots 2 inches or greater in diameter or is closer than the established protected perimeter area around the tree shall be installed in a trench dug by an air spade and the conduit and/or plumbing fitted around the tree roots.

15.82.11.3 Sewer Service Lines – Where existing sewer lines are identified to run in areas with roots 2 inches or greater in diameter or is closer than the established protected perimeter area around a tree an arborist from the City of Columbia Forestry & Beautification Department shall be consulted before digging for line replacement begins to discuss possible alternatives to avoid damaging tree roots. Once a mutually acceptable method has been identified, the arborist shall remain on site until work on the sewer service line is completed.

15.82.11.4 Water Service Lines – When the trench for water service lines is located in an area with roots 2 inches or greater in diameter or is closer than the established protected perimeter area around a tree, digging shall be done with an Air Spade and the pipes installed beneath the tree roots.

DETAILS FOR PROTECTION OF TREE ROOT ZONES WITHIN STREET R.O.W.

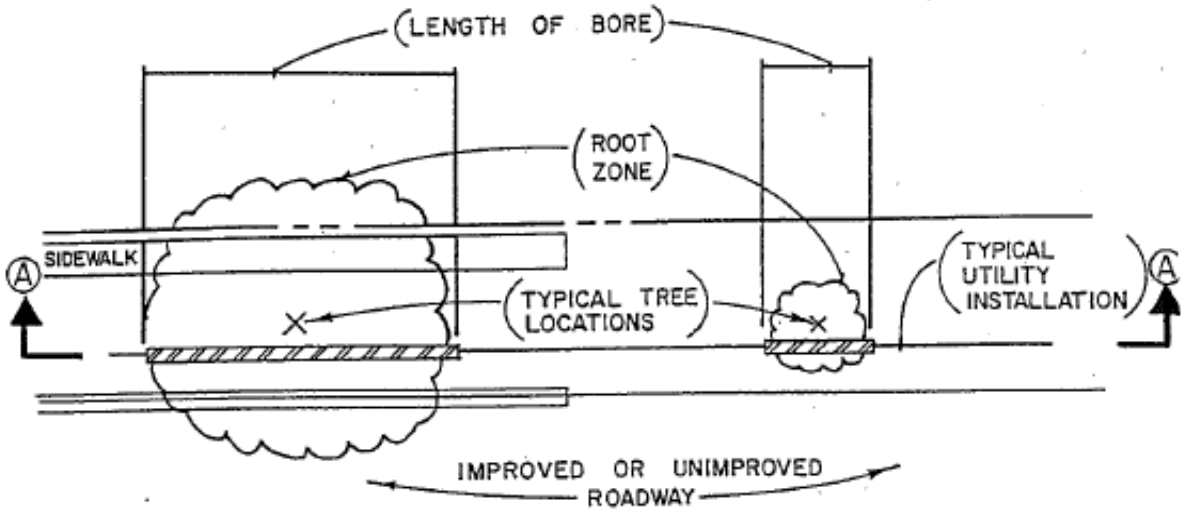

PLAN VIEW

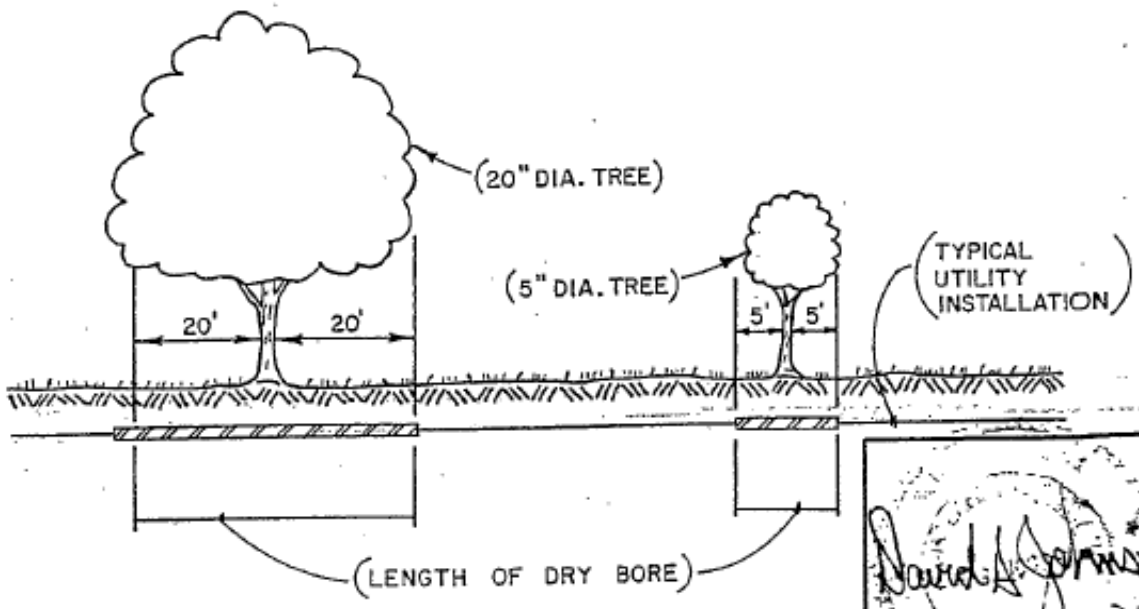

SECTION AA

8-29-86

CITY ENGINEER

DEPARTMENT OF UTILITIES AND ENGINEERING

DETAIL DB-1

DATE: JULY 30, 1986

15.83 RE-ESTABLISHMENT OF PROPERTY IRONS

15.83.1 Any property iron disturbed during construction shall be re-established by a registered land surveyor. There shall be no additional payment to the Contractor for these services.

PART 16: SPECIFICATIONS FOR WATER DISTRIBUTION SYSTEM, MATERIALS AND CONSTRUCTION

TABLE OF CONTENTS

Paragraph	Description	Page No.
16.1	General	16-1
16.2	Construction Materials	16-3
16.3	Construction Methods	16-9
16.4	Testing and Disinfection	16-14
16.5	Measurement and Payment	16-15
16.6	General Warranty for Three Years After Completion of Project	16-19

CITY OF COLUMBIA REGULATIONS
PART 16
SPECIFICATIONS FOR WATER DISTRIBUTION SYSTEM, MATERIALS AND CONSTRUCTION

16.1 GENERAL: These specifications contemplate the complete installation of certain water mains, valves and appurtenances incident to the construction of water main extensions to be connected to the City of Columbia, South Carolina, Water Works System. Construction detail drawings WC#1 through WC#11, WC#13 through WC#18 attached are a part of these specifications. No project will be constructed that does not comply with Part 2, Water Distribution System Design Standards. *It is understood that all standards cited in the text shall refer to the latest revision of that standard under the same standard number or to superseding standards under a new number.*

16.1.1 Pipe shall be installed at the locations shown on the plans and to the position, alignment and grade shown thereon, or in the event of grade conflict, as directed by the Engineer. *All pipe, fittings, packing, jointing materials, valves, and fire hydrants shall conform to section C of the AWWA Standards. All associated hardware shall have a minimum working pressure of Class 250.*

16.1.1.1 All pipe used must have working pressure rating at least two times the expected static pressure.

16.1.2 All pipe, special castings and fittings for water distribution shall be furnished in weights, classes, and/or thickness in accordance with specifications as outlined herein and in the proposal form.

16.1.3 Pipe four (4) inches through (8) inches in diameter may be PVC C-900 or ductile iron pipe. Pipe twelve (12) inches in diameter or larger shall be ductile iron pipe. All pipe used shall meet all specifications listed herein.

16.1.3.1 The City of Columbia does not accept 1”, 1.25”, 2”, 2.5”, 3”, 10”, 14” and 20” pipe for use in its water distribution system for water mains.

16.1.4 Water used for construction, testing and disinfection will be furnished by the City through approved connections to the City water system. Check valves to reduce possibility of contamination will be furnished by the contractor when directed by the City Engineer. *Water mains, which have been previously used for conveying potable water, may be reused provided they meet applicable criteria from AWWA Section C, ANSI/NSF 61, and ASTM D1786 or D2241. The mains must be thoroughly cleaned and restored practically to their original condition. Otherwise, only the use of new materials must be specified.*

16.1.5 All materials furnished by the contractor shall be delivered and distributed at the site by the contractor. Materials furnished by the owner shall be picked up by the contractor at points designated by the City and hauled to the distribution site.

16.1.6 In distributing the material at the site of the work, each piece shall be unloaded opposite or near the place where it is to be laid in the trench.

16.1.7 Pipe shall be so handled that the coating and lining will not be damaged. If, however, any part of the coating or lining is damaged, the repair shall be made by the contractor at his expense in a manner satisfactory to the engineer.

16.1.8 The water main shall be laid and maintained to the required lines and grades with fittings, valves, and hydrants at the required locations; spigots centered in bells; and all valve and hydrant stems plumb.

16.1.9 The contractor shall proceed with caution in the excavation and preparation of the trench so that the exact location of underground structures, both known and unknown, may be determined, and he shall be held responsible for the repair of such structures when broken or otherwise damaged.

16.1.10 All pipe shall be laid to the depth shown on the contract drawings. Any variations therefrom shall be made only at the order of the engineer.

16.1.11 Ledge rock, boulders, and large stones shall be removed to provide a clearance of at least six inches below and on each side of all pipe, valves, and fittings for pipes 24 inches in diameter or less, and nine inches for pipes larger than 24 inches in diameter. The specified minimum clearances are the minimum clear distances that will be permitted between any part of the pipe and appurtenances being laid and any part, projection, or point of such rock, boulder, or stone.

16.1.12 The trench shall be dug so that the pipe can be laid to the alignment and depth required, and it shall be excavated only so far in advance of pipelaying as specified or permitted by the engineer. The trench shall be so braced and drained that the workmen may work in it safely and efficiently. It is essential that the discharge of the trench dewatering pumps be conducted to natural drainage channels, drains, or storm sewers.

16.1.13 The width of the trench shall be ample to permit the pipe to be laid and joined properly, and the backfill to be placed and compacted as specified. Trenches shall be of such extra width, when required, as will permit the convenient placing of timber supports, sheeting and bracing, and handling of specials. No extra payment will be allowed for this work, the cost of which will be included in the contractor's unit bid prices.

16.1.14 Galvanized steel pipe is not acceptable for usage within the City of Columbia's water system. Ductile iron, PVC-C900 pipe and HDPE (main lines) and CTS 3408 tubing (3/4" and 2" service lines) are acceptable.

16.1.15 Post hydrants shall be installed on all dead end water mains greater than 200 feet in length. All post hydrants must meet current City Regulations (Part 16, Standard Detail). Where dead-end mains 8" or larger occur, they shall be provided with a hydrant for flushing purposes.

16.1.15.1 Permanent post hydrants shall be installed in locations that will prevent potential drainage problems. The runoff shall not be allowed to drain into existing or future yards. If possible, the post hydrant shall be located in an area which allows the flow to be directed into drainage structures (catch basins, etc.). *Post hydrants shall not be directed toward creeks but over ground where possible.* The City

Engineer reserves the right to disapprove post hydrant locations based on potential drainage problems.

16.2 CONSTRUCTION MATERIALS

16.2.1 All materials and products which come into contact with drinking water must be certified as meeting the specifications of the American National Standards Institute/National Sanitation Foundation (ANSI/NSF) Standard 61, Drinking Water System Components – Health Effects.

16.2.2 "Lead free" pipe, pipe fittings, solder and flux must be used in installation of all water mains. Pipe and pipe fittings containing no more than 8.0 percent lead are considered "lead free". Solder and flux containing no more than 0.2 percent lead are considered "lead free".

16.2.3 Gaskets, O-rings, and other products used for jointing pipes, setting meters or valves, or other appurtenances which will expose the material to water shall not be made of natural rubber or any other material which will support microbiological growth. Lubricants which will support microbiological growth shall not be used for slip-on joints. The use of vegetable shortening is prohibited.

16.2.4 DUCTILE IRON PIPE

16.2.4.1 Ductile iron pipe will be designed in accordance with ANSI specification A US Pipe 21.50 (AWWA C150) for a normal working pressure of 150 psi and Laying Condition "2". The pipe shall be manufactured in accordance with ANSI specification A 21.51 (AWWA C151). Joints shall be Bell and Spigot, Push-on (McWane Tyton American Fastite, or equivalent), or Mechanical; unless otherwise called for on the proposal form. Pipe will be cement lined and seal-coated in accordance with ANSI specification A 21.4 (AWWA C104). Pipe used must have working pressure rating at least two times the expected static pressure.

16.2.5 REINFORCED CONCRETE PIPE

16.2.5.1 Reinforced concrete pipe is not approved for water distribution system construction.

16.2.6 ASBESTOS- CEMENT PIPE

16.2.6.1 Asbestos – Cement pipe is not approved for water distribution system construction.

16.2.7 POLYVINYL CHLORIDE (PVC) PIPE

16.2.7.1 Polyvinyl chloride pipe shall conform to the specifications of the American Water Works Association Standard for Polyvinyl Chloride (PVC) Pressure pipe, 4" through 8", for water, specification C900, with the following supplemental specifications:

16.2.7.2 All polyvinyl chloride pipe shall be Pressure Class 150 and shall meet the requirements of DR18. Joints shall be Bell and Spigot, similar to Johns-

Manville's "Blue Brute", Robintech's "White Knight", or approved equal. Pipe used must have working pressure rating at least two times the expected static pressure. PVC pipe is not acceptable for usage where static pressure is above 75 psi.

16.2.7.3 Installation shall be in accordance with ANSI/ASTM D 2321. Only Class I, II, and III embedment materials, as defined in paragraph 6 and Figure 1, may be used in bedding, haunching, or initial backfill.

16.2.7.3.1 When installing C900 PVC pipe, all fittings and valves are to be installed with retaining glands (Megalugs or approved equal), in addition to concrete thrust blocks (see section 3.10).

16.2.7.4 Where PVC or Polyethylene pipe is used in water main construction, a continuous #12 gauge blue insulated cooper tracer wire, approved by the manufacturer for direct burial, shall be installed in the trench and taped to the top of the pipe using 2" duct tape. The tape shall be wrapped a minimum of 2 times around the pipe. The tracer wire shall terminate at each valve and meter and be arranged to allow connection of equipment for tracking pipe and prevent interference of operating the valve or meter. Tracer wire shall also be installed to the ends of the service lines. Underground waterproof connectors must be used on all splices. All connectors must be thoroughly wrapped in electrical tape.

16.2.7.5 PVC pipe is not approved for use within 15 feet of a building or structure.

16.2.8 FITTINGS

16.2.8.1 All fittings shall be in accordance with ANSI specification A21.10 (AWWA C110) and ANSI specification A21.11 (AWWA C111). The joints shall be Bell and Spigot, Push-on (McWane Tyton, American Fastite, or equivalent) or Mechanical; unless otherwise called for on the proposal form. Compact ductile iron mechanical joint fittings, shall be in accordance with ANSI specifications A21.53 (AWWA C153). Size on size tapping sleeves shall be mechanical joints. Smaller taps onto larger lines may use fabricated tapping sleeves. All main line taps are required to use a tapping saddle.

16.2.8.2 Fittings will be cement-lined and seal-coated in accordance with ANSI specification A21.4 (AWWA C104).

16.2.8.3 Fittings, four inch through 24 inch sizes, shall be Pressure Class 350 and 30 inch through 48 inch sizes shall be Pressure Class 250.

16.2.9 SPECIALS AND FITTING FOR REINFORCED CONCRETE PIPE

16.2.9.1 Specials and fittings for reinforced concrete steel cylinder pipe shall conform to the details in accordance with American Water Works Association's standard specifications C 301.

16.2.10 SERVICE LINES

16.2.10.1 Service lines to each lot shall be provided to the property lines or edge of easements where called for on the plans or instructed by the City Engineer. Service line connections shall be spaced to prevent cracking on PVC pipe. Spacing shall be as determined by pipe manufacturer's criteria and approved by the City Engineer.

16.2.10.1.1 Service lines 1 inch and smaller in diameter will be type K soft copper or Polyethylene PE 3408 Class 160-SDR-9 cts. Service connections to mains of all materials shall be made by the use of a service tapping saddle and corporation stop

16.2.10.1.2 Installation fittings for polyethylene tubing will be brass fittings with compression connections. Corporation stops ¾ inch through 2 inch size shall be Mueller P-25008, McDonald 4701B-22 or 4704B-22, or approved equal meeting class 250. Curb stops ¾ inch through 2 inch size shall be Mueller B25170, Hays 4302 CJ, Ford B41-333W, McDonald 6102WT or 6102W, or approved equal. All compression connections are to be used with a steel or plastic (maximum of 1" in length) insert liner at each connection made.

16.2.10.1.3 Service lines one and one half (1 ½") inches through two (2") inches in diameter may be polyethylene tubing or CTS 3408 tubing.

16.2.10.1.4 Service lines 4 inches and larger must meet same requirements as for water mains.

16.2.10.1.5 Backflow prevention devices are required for all water service connections. Double check valve and reduced pressure principle backflow prevention assemblies must be selected from the SCDHEC approved list. Also, each assembly must be tested by a certified tester upon installation, once annually thereafter, and after any repairs. Refer to Part 12, Section 12.9 – Cross Connection Control/Backflow Prevention.

16.2.10.1.6 Backflow preventer and ¾ -inch pressure reducing valve will be installed on homeowner side of the water meter. Contractor to provide warranty for 3 months after final completion of project.

16.2.11 STEEL CASING PIPE

16.2.11.1 Steel casing pipe for underground installation by dry bore and jacking shall be manufactured in accordance with ANSI specification A53. The steel pipe shall be Type S, Grade B, plain end beveled. Steel casing pipe, sizes 28 inches and larger shall conform to standard pipe dimensions contained in USA Standard USAS B36. All steel casing pipe shall be furnished in 20 foot lengths, all joints welded. The minimum wall thicknesses shall be as follows:

Normal Diameter (inches)	Normal Thickness (inches)
Under 14	0.250
14 and 16	0.281
18	0.312
20	0.312
22	0.344
24	0.375

Normal Diameter (inches)	Normal Thickness (inches)
26	0.375
28 and 30	0.406
32	0.438
34 and 36	0.469
38, 40 and 42	0.500

16.2.11.2 When casing is installed without benefit of a protective coating, and said casing is not cathodically protected, the wall thickness shown above shall be increased to the nearest standard size which is a minimum of 0.063 inch greater than the thickness shown except for diameters under 12 ¾ inches.

16.2.12 MECHANICAL JOINT RESTRAINTS

16.2.12.1 Restraints for ductile iron pipe shall be mechanical joint restraints conforming to the requirements of ASTM A536-84. Restraints shall be restrain type such as "Mega-Lug" by EBAA Iron Company or approved equal.

16.2.12.2 Joints shall be restrain type such as "Lok-Fast" or "Lok-Ring" by American Cast Iron Company or "TR FLEX" by U.S. Pipe and Foundry Company. All bolts shall be pre-coated Coating shall be of the same grade and quality as the coating on the outside of the pipe.

16.2.12.3 Mechanical joint restraints shall be used at all valves and fittings or as directed by the Engineer.

16.2.12.4 Mechanical couplings shall be installed in accordance with the mechanical coupling manufacturer's recommended procedures.

16.2.13 FIRE HYDRANTS (Standard Details)

16.2.13.1 All fire hydrants shall conform to the American Water Works Association's standard C502 and shall be guaranteed for two hundred fifty (250) pounds water working pressure. Each hydrant shall have a six (6) inch hub connection, one standard pumper nozzle and two nozzles for 2 ½ inch diameter hose. Hose threads to be National Standard.

16.2.13.2 Hydrants shall be of the size commercially recognized as five and one fourth (5 ¼) inch hydrants. Hydrants shall include all materials necessary to bring the hydrant to its location above finished grade, including extensions or offset fittings. Provide an offset fitting at sloped areas where required for the hydrant connections to be located above finished grade. Locate the offset between the shut-off valve and hydrant. Provide Grade Lok as manufactured by Assured Flow Sales, Inc. or approved equal.

16.2.13.2.1 During fire hydrant installation, all fire hydrant valves are to be restrained as close to the main line as possible with an approved hydrant tee or retaining gland (Megalugs or approved equal).

16.2.13.3 Operating nuts shall open right.

16.2.13.4 Hydrants approved for use are as follows:
Mueller – Centurion
M&H Style 929 Reliant (Epoxy Shoe Only)
CLOW – Medallion Series
American-Darling B-84-B-5

16.2.13.5 Additional fire hydrants will be reviewed for approval upon request. Written approval from the City Engineer must be obtained in order to use any fire hydrant not listed in Section 2.12.4.

16.2.14 GATE VALVES (Standard Detail)

16.2.14.1 Gate valves 3" through 12" may be resilient seated gate valves conforming to the American Water Works Association standard specification C 509. Resilient seated valves shall have internal ferrous metal surfaces fully coated with durable epoxy and have integrally cast bronze stem nut and be designed for external stern failure when excessive closing torque is applied with no failure of the pressure retaining parts.

16.2.14.2 All gate valves shall be equipped with cast iron valve boxes and covers of the adjustable or extension type, similar to the type now being used where required by the City of Columbia and weighing approximately ninety-three pounds. Provide and install an extension stem for all gate valves where the operator nut is more than 60" below finished grade. Valves shall open left.

16.2.14.3 Gate valves 24 inches and larger shall be mechanical joint and equipped with beveled gears enclosed in grease cases with grease fittings and with by-pass, scrapers and rollers. These valves shall have two such valve boxes each, one for operating stem on bevel gear and one by-pas valve.

16.2.14.4 Hand wheel valves are not approved for use in the City of Columbia water system other than the meter pit.

16.2.15 BUTTERFLY VALVES

16.2.15.1 Butterfly valves shall meet the American Water Works Association standard specification C504 – rubber seat for Class 250. The butterfly valves shall be mechanical joint, flanged, push-on or combinations thereof, and furnished with manual operators. Provide and install an extension stem for all butterfly valves where the operator nut is more than 60" below finished grade. Valves shall open left.

16.2.16 AIR RELEASE VALVES

16.2.16.1 At each high point along the water main the Contractor shall install an air release valve as follows:

16.2.16.1.1 Crispin type "N", Model No. P10 with ¼ inch orifice; APCO Model No. 200A with ¼ inch orifice, or Val-Matic Model No. 38 with 3/16 inch orifice, or approved equal, are authorized for use. All shall have a working pressure of 0 to 150 psi, and a 1 inch NPT connection. The valve shall be attached to the pipe line by means of a 1 inch corporation stop, 1 inch type K copper tubing or polyethylene tubing, 1 inch curb stop, and shall be housed in a cast iron meter box. Contractor is to coordinate the location of the air release valve so that it is located on the high point of the water main as it is actually installed in the field. See Standard Detail)

16.2.16.1.2 Automatic air release valves shall not be used in situations where flooding of the manhole or chamber may occur.

16.2.17 CHECK VALVES

16.2.17.1 Check valves shall be approved by City Engineer prior to installation of the City's system.

16.2.17.2 Check valves must be accessible.

16.2.18 POLYETHYLENE ENCASEMENT

16.2.18.1 Ductile iron pipe, fittings, valves and other appurtenances installed at locations where the water main crosses an existing metal utility line shall be encased in polyethylene in accordance with ANSI and AWWA C105 where called for on the plan.

16.2.19 CONCRETE

16.2.19.1 This section includes all concrete work required, of every description, shown or specified, including pavements, bedding concrete, thrust blocks, etc. All materials incorporated in the concrete shall conform to the South Carolina Department of Transportation Standard Specification for Highway Construction, latest edition.

16.2.20 REINFORCING STEEL

16.2.20.1 Reinforcing steel shall be of new billet steel intermediate grade made by the open hearth process, conforming to the requirements of the "Standard Specifications for Billet Steel Concrete Reinforcement Bars", Serial Designation C15-33 of the ASTM A615. Bars must be deformed in rolling, and the design of the deformation shall be in accordance with ASTM Designation A615. In addition to the reinforcing indicated on the plans, the Contractor shall furnish all necessary support bars, tie bards, etc., required for properly supporting and spacing the bars in the forms. The reinforcement will be subject to field inspection for rust, shape and dimensions.

16.2.21 METER PITS

16.2.21.1 For separate lines designed for the meter pit, there shall be a valve at the tee. If the line is not designated only for the pit there shall be a valve installed prior to the pit. See detail.

16.2.21.2 If a prefabricated meter lid is used the lid shall have a 48" aluminum opening (see Standard Detail

16.2.21.3 Meter pits shall be located inside the right-of-way (adjacent to the right-of-way/property line) and outside of traffic and parking areas. Special approval from the City will need to be obtained if located in traffic area.

16.2.21.4 If special approval is granted, meter pits located in traffic areas shall be designed to meet all load bearing requirements (see Standard Detail.)

16.2.21.5 See Standard Detail for by pass line requirements pertaining to facilities which are 24 hour or critical operations.

16.3 CONSTRUCTION METHODS

16.3.1 CLEARING AND GRUBBING

16.3.1.1 The contractor shall do all necessary clearing and grubbing along the line of the work; however, he will not be allowed to remove or otherwise damage any trees or shrubbery other than those which, in the opinion of the City Engineer in conjunction with the Forestry and Beautification Superintendent, are necessary for the protection of the work. All work shall be in accordance with easement agreements between the City and property owners. Easements may be reviewed in the office of the City Engineer. One copy will be furnished to the successful bidder on his request.

16.3.1.2 Upon completion of the work the Contractor will be required to dispose of all surplus material and rubbish and restore all public and private property which has been damaged in the course of the work. The work and services outlined under "Clearing and Grubbing" will not be paid for as such and the Contractor shall distribute the cost for performing such work and services among the various items on which unit prices are called for.

16.3.2 TRENCHING

16.3.2.1 All trenches and excavation shall be backfilled immediately after the pipes are laid therein, unless other protection of the pipe line is directed. The backfill material shall be selected and deposited with special attention to proper bedding of the pipe. Except where special methods of bedding and tamping are provided for, clean earth, sand or rock dust shall be solidly tamped about the pipe. Minimum cover shall be as follows:

16.3.2.2 Minor subdivision piping, 8 inch diameter and less, 30 inch minimum cover.

16.3.2.3 Twelve-inch diameter, 36-inch minimum cover.

16.3.2.4 Sixteen inch diameter and larger, 48 inch minimum cover.

16.3.2.5 Piping 12" or larger to be located outside a dedicated easement (inside dedicated right-of-way) shall have a 48 inch minimum cover. Piping less than 12" to be located shall have a 36" minimum cover. This depth shall be measured from the low point of the cross section of the existing road right-of-way. The road right-of-way shall include embankments, ditches and other such appurtenances adjacent to the road. The Contractor shall be required to coordinate this work with the Engineer/Inspector. Any piping to be located inside SCDOT right-of-way must meet SCDOT requirements.

16.3.2.6 The Contractor shall be required to have all road crossings tested by an approved laboratory that will certify that the backfill material has been compacted to 95% maximum density as determined by AASHTO-99 procedures.

16.3.2.7 Special conditions other than those listed shall be approved in writing by the City Engineer.

16.3.2.8 Separation of water mains and sanitary sewers shall be in accordance with "Ten State Standards".

16.3.2.9 Trenching shall be in accordance with AWWA C-600, Section 3.1 and 3.2. Minimum trench width shall be pipe diameter plus two feet. All excavated materials which are unsuitable for backfilling the trench shall be wasted in an area provided by the Contractor and approved by the City Engineer.

16.3.2.10 The bottom of the trenches shall be graded in such a manner as to provide a firm bearing for the pipe. The use of boards or other material to support the pipe will not be permitted. Continuous *and uniform bedding shall be provided in the trench for all buried pipe.* Any soft or unstable foundations encountered shall be removed and replaced with suitable material and thoroughly compacted. Bell holes shall be of sufficient size to allow proper construction.

16.3.2.11 The Contractor shall perform all excavation of every description and of whatever substances encountered, to the depth indicated on the drawings or as otherwise specified by the City. During excavation, material suitable for backfilling shall be piled in an orderly manner, a sufficient distance from the banks of the trench to avoid overloading and to prevent slides or cave-ins. OSHA regulations shall govern.

16.3.2.12 Where trenching is in a paved area, the pavement and base shall be removed a minimum of 12 inches on each side of the trench in order to place the edge of the new paving upon undisturbed soil. All work in streets shall conform to most recent Code of Ordinances for the City of Columbia.

16.3.2.13 Where trenching is adjacent to slopes, either cuts or fills, the Contractor will not be permitted to level or alter or otherwise damage these slopes for the purpose of using any equipment such as trenching machines or back-hoes, unless special permission, in writing, is given the Contractor by the City Engineer, and the Contractor is cautioned to examine the locations of the proposed water lines with this in mind.

16.3.2.14 Trench widths shall be as follows when construction is under an improved surface:

Nominal Pipe Diameter (inches)	Minimum in Earth and Rock (inches)
4	36
6	36
8	36
12	36
16	40
18	42
24	54
30	60
36	66
42	72
48	78
54	84
60	96

16.3.2.15 To protect persons from injury and to avoid property damage, adequate barricades, construction signs, torches, warning lanterns and guards as required shall be placed and maintained during the progress of the construction work. All material piles, equipment, and pipe that may serve as obstructions to traffic shall be enclosed by fences or barricades and shall be protected by proper lights when the visibility is poor. Safety rules and regulations of local authorities shall be observed.

16.3.2.16 All excavations shall be dewatered properly before laying pipe. Where running sand is encountered, dewatering shall be done by well pointing whenever possible. Where soil conditions are not favorable for use of well points, French drains of crushed stone or gravel shall be constructed to suitably located sumps and the water removed by bailing or pumping.

16.3.3 BACKFILLING AND UNSUITABLE BACKFILL MATERIAL

16.3.3.1 Where the excavated material is unsuitable for backfill purposes, the Contractor shall furnish satisfactory material wasted from trench excavation in other locations, or from other sources selected by him and approved by the City Engineer. Approved flowable fill material may be required depending on location and conditions of applicable permits.

16.3.3.2 Backfill shall be in accordance with Section 3.5 AWWA C-600. The Contractor shall provide geotechnical tests confirming backfill is suitable upon request by the City.

16.3.3.3 In backfilling trenches the material shall first be carefully placed around the pipe and thoroughly tamped up to the elevation of the top of the pipe in layers not exceeding six inches in thickness by means of power-driven tampers; the remainder of the trench shall then be filled in layers not more than six inches in thickness and each layer thoroughly tamped with power-driven tampers. Where backfilling material is too wet for satisfactory tamping, the material shall be allowed to dry or dry material shall be hauled in. The Contractor will be held responsible for settlement over all trenches and, where necessary, he shall add material which shall be thoroughly tamped in the prescribed manner.

16.3.3.4 All backfilling of excavated portions requiring pavement replacement shall be mechanically tamped in six inch layers, using heavy duty tampers, such as pneumatic tampers with tamping foot attachment. Each layer shall be thoroughly tamped to a density equivalent to at least 95 percent of an AASHTO T-00-49 Proctor Curve.

16.3.3.5 The Contractor will be required to furnish, maintain and operate at all times such equipment as is necessary to keep the streets along the route of operation in good condition throughout the life of this contract. This work and service will not be paid for as such and the Contractor shall distribute his cost for performing such work and services among the various items on which unit prices are called for.

16.3.3.6 Excavated rock shall not be mixed with material selected for the tamped backfill under and around the pipe. Stones, other than crushed bedding, shall not come in contact with the pipe and shall not be within 6 inches of the pipe.

16.3.3.7 All surplus rock excavated shall be removed and disposed at locations approved by the City.

16.3.3.8 Whenever the trenches have not been properly filled, or if settlement occurs, they shall be refilled, smoothed off and finally made to conform to the surface of the ground by the Contractor. Backfill shall be carefully placed and the original surface restored to the full satisfaction of the Engineer.

16.3.4 ROCK EXCAVATION

16.3.4.1 Wherever “rock” is used as the name of an excavated material, it shall mean boulders or pieces of rock, concrete, or masonry measuring one-half (1/2) cubic yard or more, hard shale or solid ledge rock and masonry which, in the opinion of the Engineer, requires for its removal the continuous use of pneumatic tools or drills and blasting.

16.3.4.2 Before payment is allowed for rock excavation, the contractor shall be required to demonstrate that the material cannot be removed “by hand pick” or by power operated excavator or shovel. No payment will be made for Rock Excavation unless air tools or explosives were used by the contractor. No payment will be made for Rock Excavation unless the Engineer determines that the material meets the above criteria, and gives written approval for payment prior to excavation.

16.3.4.3 Should the Contractor elect to use explosives to loosen rock or for any other purposes in the prosecution of the work, he shall obtain the required permits and the written permission of the Engineer. The City Fire Chief and Police Chief shall be notified. If construction is outside the City Limits, the Contractor shall be responsible for determining whether a County permit is required and for obtaining any permit so required. The Contractor’s methods and procedures in the transportation, handling, storage and use of explosives shall comply with requirements of Federal and State laws, County regulations, if applicable, City regulations, the Standard Fire Prevention Code and O.S.H.A. Rules and Regulations. The Contractor shall be responsible for and shall repair at his expense any damage caused by blasting or accidental explosions.

16.3.4.4 Blasting for excavation will be permitted only after securing the approval of the Engineer and only when proper precautions are taken for the protection of persons and property. The hours of blasting will be fixed by the Engineer. The Contractor's methods and procedures in blasting shall conform to requirements of laws and regulations listed in item 3.4.

16.3.5 CONNECTION TO EXISTING WATER MAIN

16.3.5.1 The Contractor will be required to use a City approved contractor to connect the proposed mains with existing mains. Special permission from the City Engineer must be obtained prior to the Contractor making any connections to existing prestressed concrete cylinder pipe. The approximate locations of existing mains and connections are noted on plans but it will be incumbent upon the Contractor to ascertain the exact locations of these mains.

16.3.6 EARTH CUSHION

16.3.6.1 Where water mains are laid over rock or under sanitary sewers, storm drains, gas lines, water mains, telephone ducts or other buried structures, the water mains shall be laid so as to provide a minimum six inch earth cushion between the proposed mains and the existing structures, unless relief from this restriction is given by the City Engineer in any specific location. In any case minimum separation required for sanitary sewers shall conform to "Ten State Standards".

16.3.7 JOINTS FOR EXISTING PRESTRESSED CONCRETE CYLINDER PIPE

16.3.7.1 After connections have been made, the exposed metal areas shall be grouted with a cement grout in accordance with the manufacturer's direction and the joints shall be protected against too rapid drying and against damage until final set has taken place.

16.3.7.2 Special permission from the City Engineer must be obtained prior to the Contractor making any connections between new construction and existing prestressed concrete cylinder pipe as called for on all the plans. Cost of this work shall not be paid for directly, but will be included in other bid items.

16.3.8 PIPE LAYING

16.3.8.1 Pipe laying shall be in accordance with AWWA C-600, Section 3.3 and 3.4 except figure 1 and figure 2, laying conditions.

16.3.8.2 Closure of Open Pipes. The ends of all dead end pipes shall be securely closed to prevent entry of contaminants prior to backfill of the trench as specified on the plans. At the end of the work day or at any time the work is to be left unattended, the open end of all pipes shall be securely closed with manufactured plugs, to prevent the entry of trash, debris or vermin.

16.3.9 SETTING VALVES, FITTINGS AND HYDRANTS

16.3.9.1 Valves, fittings and hydrants shall be set in accordance with AWWA C-600 sections 3.6 and 3.7. Appurtenances not covered therein shall be set in a manner

approved by the Engineer. Hydrants are to be set in accordance with Standard Details herein. Valves located at fittings shall be set within 10' of the fitting unless approved by City.

16.3.9.2 During fire hydrant installation all fire hydrant valves are to be restrained as close to the main line as possible with an approved hydrant tee or retaining glands (megalugs or approved equal).

16.3.10 CONCRETE THRUST BLOCKS, ANCHORS AND PIERS

16.3.10.1 When directed by the Engineer or where called for on the plans, the Contractor shall install concrete blocks, anchors, and piers to support the pipe and to prevent movement at bends placed in the line. The Engineer will direct the Contractor as to the size, shape, and extent of such concrete blocking. See Standard Details. For pipe sizes larger than 30", the Engineer shall determine the soil bearing capacity and specify in detail the type and extent of restraint required.

16.3.10.2 Before placing metal reinforcement it shall be free from rust, scale, or other coatings that will destroy or reduce the bond. Reinforcement shall be formed to the dimensions indicated on the plans. Cold bends shall be made around a pin having a diameter of four or more times the least dimensions of the bar. Metal reinforcement shall not be bent or straightened in a manner that will injure the material. Metal reinforcement shall be accurately placed and secured, and the design shall be approved by the Engineer.

16.3.10.3 Reinforcement shall be placed in strict accordance with the details of the approved shop drawings. The reinforcement in walls, slabs, beams and foundations shall be spaced by means of approved chairs or precast mortar or concrete blocks. All intersections of reinforcement shall be wired together except that laps and splices shall be separated to allow development of proper bond for each bar. The minimum clear distance between spliced bars shall not be less than the largest of the following: (1) the bar diameter, (2) one inch, (3) one and one-third times the maximum size of the coarse aggregate. Placing plans and bending diagrams (shop drawings) furnished by the fabricator shall show sufficient plan, elevation and sectional views which, in the opinion of the Engineer, will permit accurate checking and placing of all reinforcement.

16.4 <u>TESTING AND DISINFECTION</u>

16.4.1 All pipe, fittings, and valves shall be thoroughly cleaned before being placed in the line. Before any section of line is placed in service it shall be disinfected. Three-fourths (3/4) inch outlets shall be provided as required to insure adequate sampling of water during disinfection tests. Two samples of water will be taken from the main twenty-four hours apart and will be examined at the Columbia Water Plant Laboratory with the results including both coliform and non-coliform growth. Prior to sampling, the chlorine residual must be reduced to normal system residual levels or be non-detectable in those systems not chlorinating. These samples must show the water line to be absent of total coliform bacteria. The chlorine residual must also be measured and reported. If the membrane filter of analysis is used for the coliform analysis, non-coliform growth must also be reported. The Contractor shall continue the disinfection until water in the line has

been approved. The number of sites depends on the amount of new construction but must include all dead-end lines, be representative of the water in the newly constructed mains, and shall be collected a minimum of every 1,200 linear feet. Water samples will be collected and sampled by the City of Columbia's Laboratory upon completion of construction, submittal and approval of record drawings, receipt of Form #2 signed by the developer and Form #3 signed by the contractor who installed the water main. Approved test are valid for 30 days and will be released to the Engineer of record upon receipt of all required and properly executed deeds. Failure to submit these required deeds within the 30-day period; will result in the expiration of the approved water samples, therefore requiring a re-test. It will be the responsibility of the developer to retain a state approved private lab to conduct all such re-test and bear all associated expenses. Disinfection by the contractor shall be accomplished in accordance with AWWA C651 or revisions thereof. If the non-coliform growth is greater tan eighty (80) colonies per one hundred (100) milliliters, the sample result is invalid and must be repeated.

16.4.2 The Contractor will be required to test each section of line between valves at a pressure of 150 pounds per square inch or 1.5 times the operating pressure, whichever is greater. This pressure shall be maintained for not less than two hours or as much longer as the Engineer may required in order to detect any leakage or defective material. Any makeup water required shall be carefully measured and the leakage shall not exceed the requirement of AWWA C600 section 4. Any leaking or sweating joints shall be corrected. *The equation used for the leakage must be included in the specifications.* This specification is to be used for all types of pipe. No test section shall be accepted if the leakage exceeds the limits determined by the formula below:

$$a.1. = \frac{nd\ p^{.5}}{7400}$$

In which a.l. is the allowable leakage in gallons per hour; n is the number of joints in the length of pipeline being tested; d is the normal diameter of the pipe in inches; and p is the average test pressure during the test period in pounds per square inch gauge. A leakage test shall be implemented as per AWWA Standard C600, latest edition, Section 4.2.

16.5 MEASUREMENT AND PAYMENT

16.5.1 WATER MAIN PIPE MEASUREMENT AND PAYMENT

16.5.1.1 Payment for water mains will be made on the basis of measurements taken as prescribed, at the unit prices bid by the Contractor. This price shall include all labor, equipment, and materials (not including fittings, specials, and valves) necessary for furnishing, installing, making connections to existing mains, backfilling, (including removal of unsuitable material and replacement with suitable material) installing in existing casings, testing, disinfection, and all other work incident to the complete installation of these mains in accordance with these specifications.

16.5.1.2 Payment for water main shall include all costs associated with ensuring minimum cover is maintained for the entire length of the water main.

16.5.1.3 Measurement for payment for water mains will be taken along the center line of the mains and will include all fittings and valves encountered in making these measurements. Measurements will be made through casings and payment will be made as specified herein.

16.5.2 DUCTILE IRON FITTINGS AND SPECIALS

16.5.2.1 Ductile iron fittings and specials will be measured per each and paid for at the unit price bid by the Contractor. This price shall include all labor and equipment and all materials, necessary for installing, making connections to existing mains, backfilling, testing, disinfecting and all other work incident to the complete installation of these ductile iron fittings in accordance with these specifications.

16.5.3 VALVE WITH BOX

16.5.3.1 Valves with necessary boxes will be measured per each and will be paid for at the unit price bid by the Contractor. This price shall include all material, labor, and equipment necessary for installing, furnishing, backfilling, testing, disinfecting and all other work incident to the complete installation of these valves, with necessary boxes, in accordance with these specifications.

16.5.4 FIRE HYDRANTS

16.5.4.1 Fire hydrants will be measured per each and will be paid for at the unit price bid by the Contractor. This price shall include all labor and equipment and all materials including extensions and fittings necessary for hydrant installation. Blocking, valves, and pipe will be paid for separately.

16.5.5 TAPPING SLEEVES AND VALVES

16.5.5.1 Tapping sleeves and valves will be measured per each and paid for at the unit price bid by the Contractor. This price shall include all labor and equipment and all materials, (except concrete blocking) incident to making the taps and the complete installation of the sleeves and valves. It s understood that the price bid by the Contractor on this item includes both tapping sleeves and valves and no additional allowance will be made for either the sleeve or the valve.

16.5.6 CONCRETE THRUST BLOCKS, ANCHORS AND PIERS

16.5.6.1 This work will be paid for at the unit price bid by the Contractor. This price shall include all material, labor, and equipment necessary for furnishing, excavating, forming, installing, backfilling, and all other work incident to the complete installation of the concrete blocks, anchors, and piers in accordance with these specifications and details shown on the plans. Payment will be made to neat lines of construction shown on the plans, no allowance being made for extra ditch width.

16.5.7 CONNECTING TO EXISTING MAINS

16.5.7.1 These shall be no direct payment for connecting to the existing mains. Ductile iron fittings and specials used in making the connections will be measured and paid for at the unit price bid by the Contractor.

16.5.8 TESTING AND DISINFECTION

16.5.8.1 The work and materials, involved in testing and disinfection the water mains will not be paid for directly, the cost of which shall be included in other bid items.

16.5.9 REMOVE AND REPLACE PAVING

16.5.9.1 Where pavement is encountered as shown on the plans, the work will be paid for at the unit bid price per lineal foot and shall be measured along the centerline of construction. Extra width will not be measured for payment.

16.5.9.2 The unit bid price for this item includes all labor, tools, equipment and materials necessary to complete the work. The unit bid price shall also include the cost of using flowable fill as backfill material and/or compaction to 95% maximum density as determined by AASHTO T-99 procedures. All compaction testing shall be certified by an approved laboratory. The unit bid price shall also include the cost of removing all paving materials which are not suitable for backfilling the trench from the job. There will be no extra payment for any of the above work, the cost of which shall be included in the unit bid price for "Remove and Replace Paving".

16.5.10 REMOVE AND REPLACE ASPHALT DRIVE AND REMOVE AND REPLACE CONCRETE DRIVE

16.5.10.1 This work will be paid for at the unit bid price per lineal foot. Measurement for payment will be along the centerline of construction. Extra width will not be measured for payment.

16.5.10.2 The unit price bid for this item shall include all labor, tools, equipment and materials necessary to accomplish the work and shall include the cost of removing all paving materials which are not suitable for backfill in the trench from the job. This work shall be completed within three days after the initial cutting.

16.5.11 RESURFACE EXISTING PAVEMENT

16.5.11.1 Payment for resurface existing pavement will be made at the unit bid price per square yard in accordance with field measurements of area made by the City Engineer. The Contractor shall furnish the Engineer all asphalt weight tickets at the time the work is accomplished. The computed yield, arrived at by dividing the weight of asphalt used by the measured area shall be a minimum of 200 pounds per square yard. In those areas where the work is acceptable to the South Carolina Department of Transportation and the City Engineer, yet the computed yield is less than 200 pounds per square yard, payment will be made for the item in direct ratio of the square of the actual yield to the square of 200 pounds per square yard.

16.5.12 PORTLAND CONCRETE CEMENT SIDEWALK

16.5.12.1 Concrete sidewalk shall be measured for payment based on the amount of sidewalk ordered removed and replaced by the Engineer. The width used for computing quantities shall be the actual width of the sidewalk unless specified otherwise by the Engineer. The unit price per square foot for this item will be complete payment.

16.5.13 AIR RELEASE VALVES

16.5.13.1 Air release valves will be measured per each and be paid for at the unit price bid by the contractor. This payment shall include all labor and equipment and all materials incident to installation of the air release valves, including the corporation stop, curb stop, copper tubing and meter box.

16.5.14 STEEL CASING PIPE

16.5.14.1 The payable boring footage will be the distance shown on the plans or as specified by the Engineer. The unit bid price per lineal foot of "Steel Casing Pipe" shall include all labor, materials, tools, and equipment necessary to install the casing.

16.5.15 ROCK EXCAVATION

16.5.15.1 Where rock excavation is to be measured for payment, quantities will be determined by the Engineer. Rock required to be removed shall be computed by the cubic yard. Dimensions for pay purposes shall be the difference in elevation between the top and bottom of the rock as determined by the Engineer and the specified ditch width for the pipe size being laid. Where rock is encountered in the bottom of the trench, the maximum depth for payment purposes will be six (6) inches below the bottom of the pipe.

16.5.15.2 Payment shall be made at the contract unit price per cubic yard for rock excavation. These prices shall be full compensation for furnishing all materials, for all preparation and excavation of rock, for backfilling the excavated trench to the bottom of the pipe with selected backfill material and for all labor, equipment, tools and incidentals necessary to complete the item.

16.5.16 UNSUITABLE BACKFILL MATERIAL

16.5.16.1 Where the excavated material is unsuitable for backfill purposes, the Contractor shall furnish satisfactory material wasted from trench excavation in other locations, or from other sources selected by him. The Contractor shall not be paid directly for the disposal of unsatisfactory material, or the furnishing of suitable backfill material. These costs shall be included in other bid items.

16.5.17 CONCRETE ENCASEMENT

16.5.17.1 Measurement shall be made along the centerline of the pipe and the pay quantity shall be determined from Standard Detail attached.

16.5.17.2 Payment for furnishing concrete encasement will be at the unit price per cubic yard for the class of concrete stated in the proposal, such price to be paid in addition to that paid per foot of water main. The unit price stated in the proposal

shall include the cost of additional depth of excavation, the furnishing and placing of concrete and laying of pipe to line and grade on bricks.

16.6 GENERAL WARRANTY FOR THREE YEARS AFTER COMPLETION OF CONTRACT

16.6.1 For a period of at least three years after the completion of the contract, the contractor warrants the fitness and soundness of all work done and materials and equipment put in place under the contract. Neither the certificate of final acceptance, payment of the final estimate, nor any provision in the Contract Document, nor partial or entire occupancy of the premises by the City Shall constitute an acceptance of work not done in accordance with the Contract Documents, nor relieve the Contractor of liability in respect to any express warranties or responsibility for faulty materials or workmanship. The Contractor shall remedy any defects in the work and pay for any damage to work resulting therefrom, which shall appear within a period of three years from the date of final acceptance of the work unless a longer period is specified. The City will give notice of observed defects with reasonable promptness. If the contractor deems the defect is not related to his work, the contractor must prove so by consultation with City Engineer at the site at no charge to the City of Columbia.

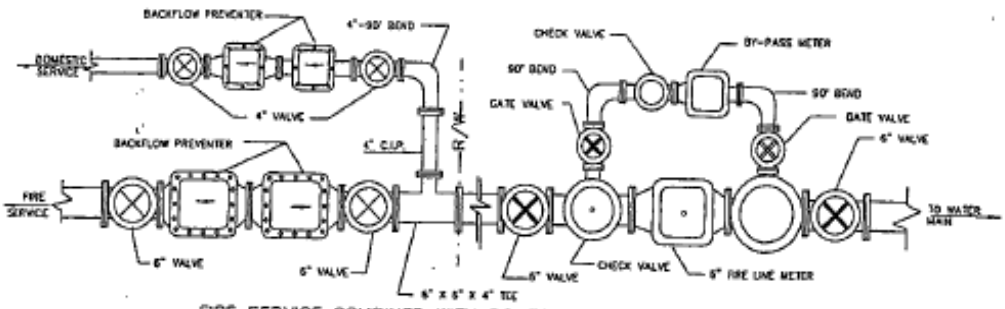

FIRE SERVICE COMBINED WITH DOMESTIC SERVICE(TYPICAL)
(USING 6" FIRE SERVICE AND 4" POTABLE WATER SERVICE AS EXAMPLE)

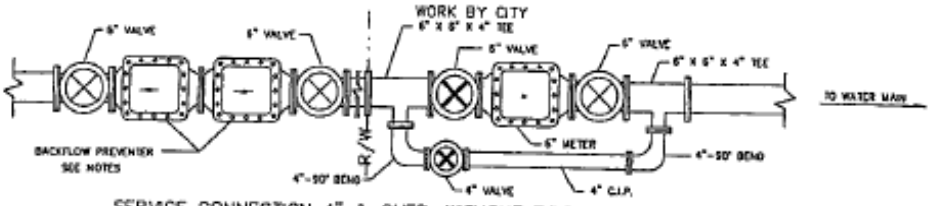

SERVICE CONNECTION 4" & OVER, WITHOUT FIRE SERVICE

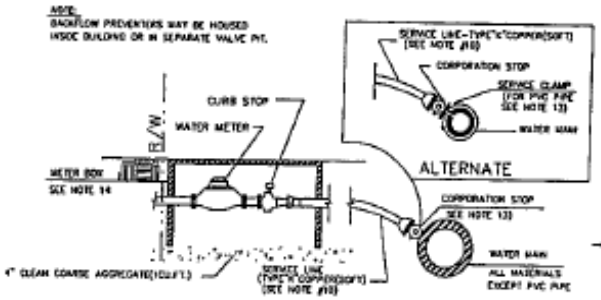

SERVICE CONNECTION, 2" AND UNDER ON PVC PIPE;
3" AND UNDER ON OTHER MATERIALS

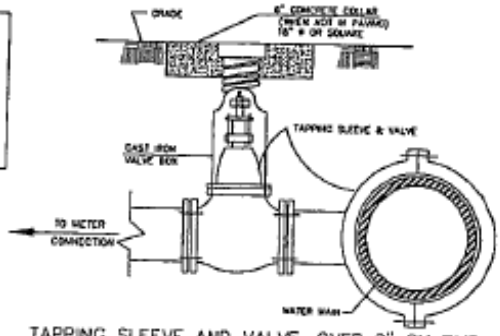

TAPPING SLEEVE AND VALVE, OVER 2" ON PVC
PIPE; OVER 3" ON OTHER MATERIALS

1. FIRE SERVICE METER ASSEMBLY UTILIZES ONLY ONE LINE FOR FIRE PROTECTION SERVICE AND DOMESTIC WATER SERVICE. ONLY ONE METER BOX REQUIRED TO HOUSE SERVICE TO PROPERTY.
2. THE SIZES OF FIRE LINE METER AND BY PASS METER VARIES WITH APPLICATION.
3. METERS AND BACKFLOW PREVENTERS ARE IN SEPARATE PITS NORMALLY.
4. TYPE OF BACKFLOW PREVENTER VARIES WITH APPLICATION.
5. METERS ARE INSTALLED BY CITY FORCES AT OWNER'S EXPENSE.
6. ALL VALVES MUST MEET CITY OF COLUMBIA SPECIFICATIONS.
7. VALVES NOT IN PITS WILL BE IN CAST IRON BOXES WITH CAST IRON LIDS AS SHOWN IN MUELLER CATALOG W-103, OR EQUAL.
8. ALL C.I. PIPE JOINTS TO BE FLANGED.
9. ALL COPPER JOINTS TO BE FLARED.
10. SERVICE LINES, 1" AND SMALLER, POLYETHYLENE PE 3406, CLASS 160 SDR-9 CTS. OR TYPE K COPPER(SOFT). 1 1/2" THRU 3" ASTM D 1785, SCHEDULE 80 PVC-GASKET JOINTS.
11. WHEN THE CITY ELECTS TO INSTALL THE SERVICE ON NEW MAINS, THE CONTRACTOR SHALL STUBOUT THE SERVICE WITH A FLANGED TO MECHANICAL JOINT VALVE.
12. ALL PRESSURE REDUCING BACKFLOW PREVENTERS SHALL BE IN ACCORDANCE WITH DHEC REQUIREMENTS.
13. DIRECT TAP OF PVC MAINS SHALL NOT BE ALLOWED. SERVICE CONNECTIONS FOR PVC MAINS SHALL PROVIDE FULL SUPPORT AROUND CIRCUMFERENCE OF PIPE. SERVICE SADDLES FOR TAPS OVER 1" OR ON PVC MAINS OVER 8" SHALL BE DOUBLE STRAP.
14. METER BOXES FOR METERS 2" AND BELOW WITHIN THE TRAVELED WAY MUST BE CAST IRON OR CONCRETE. METER BOXES OUTSIDE THE TRAVELED WAY MAY BE CAST IRON, CONCRETE, OR PLASTIC. ALL LIDS TO BE CAST IRON WITH METER READER LIDS. FOR METERS 3" AND ABOVE SEE STANDARD DETAIL WC-1A.

NOTE: THIS DETAIL SUPERSEDES DETAIL WC #1 DATED 10-3-88.

SOUTH CAROLINA PROFESSIONAL ENGINEER No. 10898 DAVID JOHNSON

CITY OF COLUMBIA
DEPARTMENT OF ENGINEERING
COLUMBIA, SOUTH CAROLINA

SCALE: NTS	APPROVED BY:	DRAWN BY:
DATE: 1/14/97		P. WALL

TYPICAL SERVICE CONNECTIONS

TYPICAL METER BOX FOR METERS 3" AND ABOVE

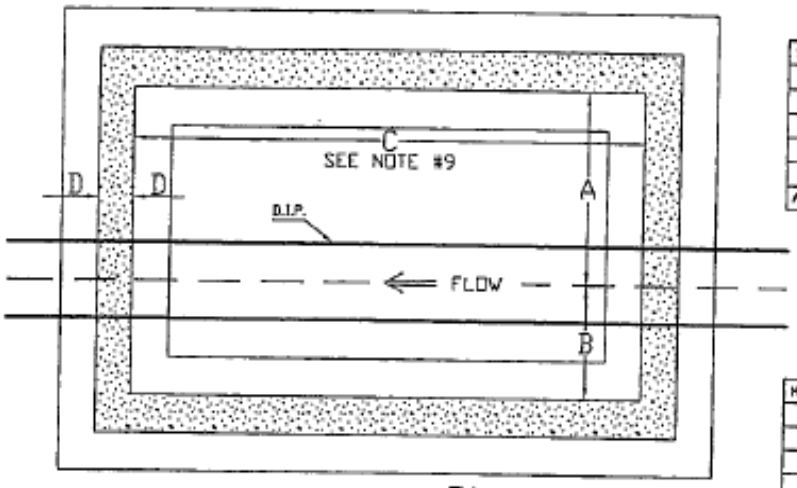

PLAN VIEW

METER BOX DIMENSIONS

METER SIZE	3"	4"	6"	8"	10"
A	30"	30"	36"	42"	48"
B	18"	18"	24"	26"	32"
C	84"	84"	96"	104"	120"
D	6"	6"	6"	8"	8"
E	12"	12"	12"	18"	18"
ACCESS DOOR	24"	24"	24"	24"	24"

METER BOX DIMENSIONS W/ BY PASS

METER SIZE	3"	4"	6"	8"	10"
A	30"	30"	36"	42"	48"
B	30"	30"	36"	38"	54"
C	108"	108"	120"	132"	168"
D	6"	6"	6"	8"	8"
E	12"	12"	12"	18"	18"
ACCESS DOOR	24"	24"	24"	24"	24"

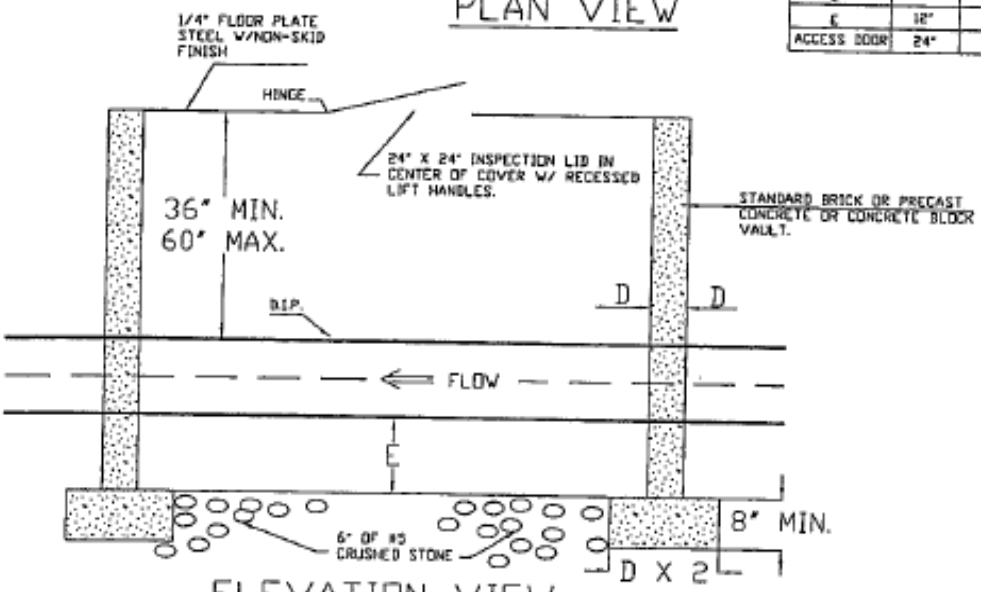

ELEVATION VIEW

1. METER BOXES FOR METERS 3" AND ABOVE SHALL BE SITE CONSTRUCTED OF THE MATERIALS AND TO THE DIMENSIONS SPECIFIED HEREIN.
2. METER BOXS CONSTRUCTED WITHIN THE TRAVELED WAY MUST WITHSTAND HEAVY SUPERIMPOSED LOADS. EACH MUST BE DESIGNED TO TO MEET THE REQUIRMENTS OF THE INDIVIDUAL ENVIRONMENT IN WHICH IT IS TO BE USED. DETAILS/SHOP DRAWINGS AND DESIGN CALCULATIONS MUST BE SUBMITTED AND APPROVED PRIOR TO INSTALLATION OF THE METER.
3. METER BOXES SHALL BE PROVIDED WITH A COVER FABRICATED FROM ONE FOURTH (1/4") INCH THICK FLOOR PLATE STEEL WITH A NON-SKID SURFACE PRIMED AND PAINTED TO COVER ENTIRE BOX. COVER MUST HAVE A HINGED 24" X 24" INSPECTION LID IN THE CENTER OF THE COVER WITH LIFT HANDLES FOR MANIPULATING THE LID. COVER HANDLES MUST LAY FLAT & BELOW SURFACE COVER.
4. THE BOX COVER SHALL BE FLUSH WITH THE SURROUNDING GROUND SURFACE AND SHALL HAVE TWO (2") INCH GUIDES ALONG ADJACENT SIDES TO PREVENT LATERAL MOVEMENT.
5. THE BOX SHALL BE CONTRUCTED OF STANDARD BRICK, OR CONCRETE BLOCK USING PORTLAND CEMENT MORTAR IN A STANDARD MIXTURE OR BY USING PRECAST CONCRETE.
6. SIX (6) INCHES OF #5 CRUSHED STONE SHALL BE PLACED IN THE BOTTOM OF EACH BOX. SEE "E" FOR PROPER CLEARANCE BETWEEN THE TOP OF THE STONE AND THE BOTTOM OF THE PIPE.
7. DUCTILE IRON PIPE MUST RUN COMPLETELY THROUGH METER BOX. METER SHALL BE INSTALLED (CUT-IN) BY CITY FORCES.
8. VALVE WITH BOX SHALL BE INSTALLED BETWEEN METER BOX AND SOURCE WATER MAIN.
9. ALL METER BOXES SHALL HAVE THE DIMENSIONS SHOWN BY THE ABOVE TABLE.
10. METER BOXES FOR METERS TEN (10") INCHES AND ABOVE SHALL BE APPROVED BY THE CITY ENGINEERING DEPARTMENT PRIOR TO BEGINNING CONSTRUCTION.

SOUTH CAROLINA PROFESSIONAL ENGINEER No. 10098

CITY OF COLUMBIA
DEPARTMENT OF ENGINEERING
COLUMBIA, SOUTH CAROLINA

SCALE: NTS	APPROVED BY:	DRAWN BY: DEG
DATE: 3-20-02		

TYPICAL METER BOX FOR 3" AND ABOVE METERS

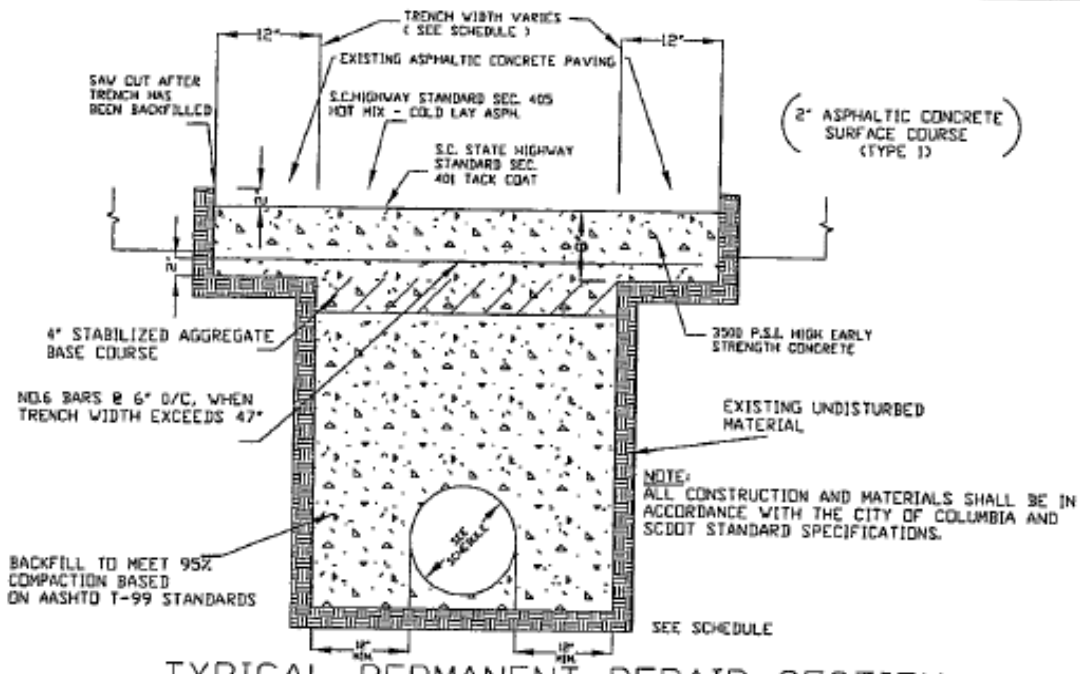

TYPICAL PERMANENT REPAIR SECTION

MIN. TRENCH WIDTH SCHEDULE					
PIPE SIZE I.D.	12" & LESS	15" TO 21"	24" TO 30"	33" TO 54"	60" & OVER
TRENCH WIDTH (W/O SHORING)	36"	I.D. + 24"	I.D. + 30"	O.D. + 30"	O.D. +36"
TRENCH WIDTH (W/ SHORING)	48"	I.D. + 36"	I.D. + 42"	O.D. + 42"	O.D. +48"

FOR SIZES LARGER THAN 60" SEE SSC#3.7.3.2.

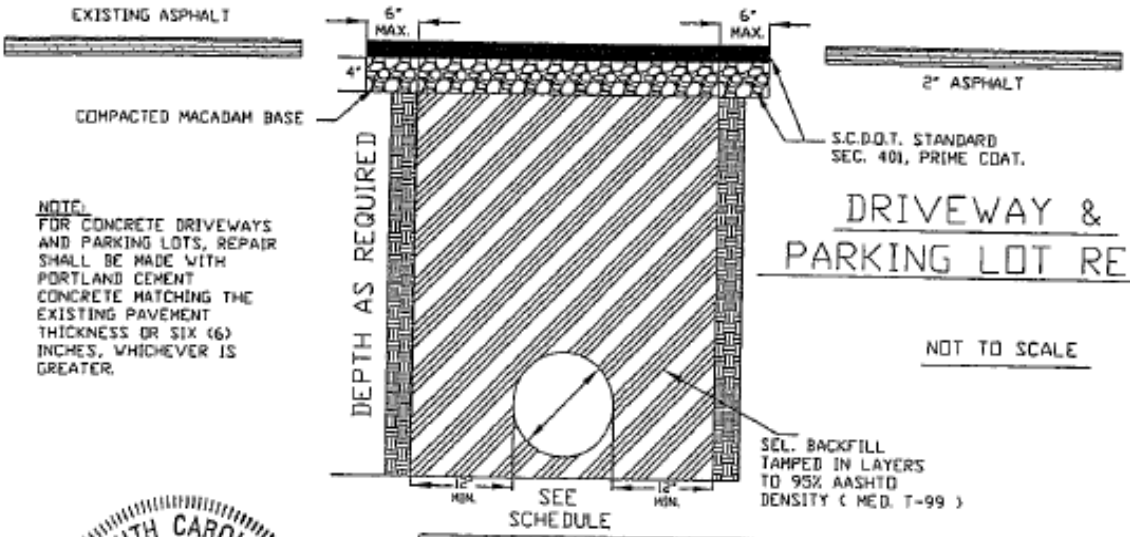

NOTE:
FOR CONCRETE DRIVEWAYS AND PARKING LOTS, REPAIR SHALL BE MADE WITH PORTLAND CEMENT CONCRETE MATCHING THE EXISTING PAVEMENT THICKNESS OR SIX (6) INCHES, WHICHEVER IS GREATER.

DRIVEWAY & PARKING LOT REPAIRS

NOT TO SCALE

SOUTH CAROLINA REGISTERED PROFESSIONAL ENGINEER DAVID A. JOHNSON

CITY OF COLUMBIA
DEPARTMENT OF ENGINEERING
COLUMBIA, SOUTH CAROLINA

SCALE: NTS	APPROVED BY:	DRAWN BY: DEG
DATE: 3-21-02		

TYPICAL REPAIR SECTIONS

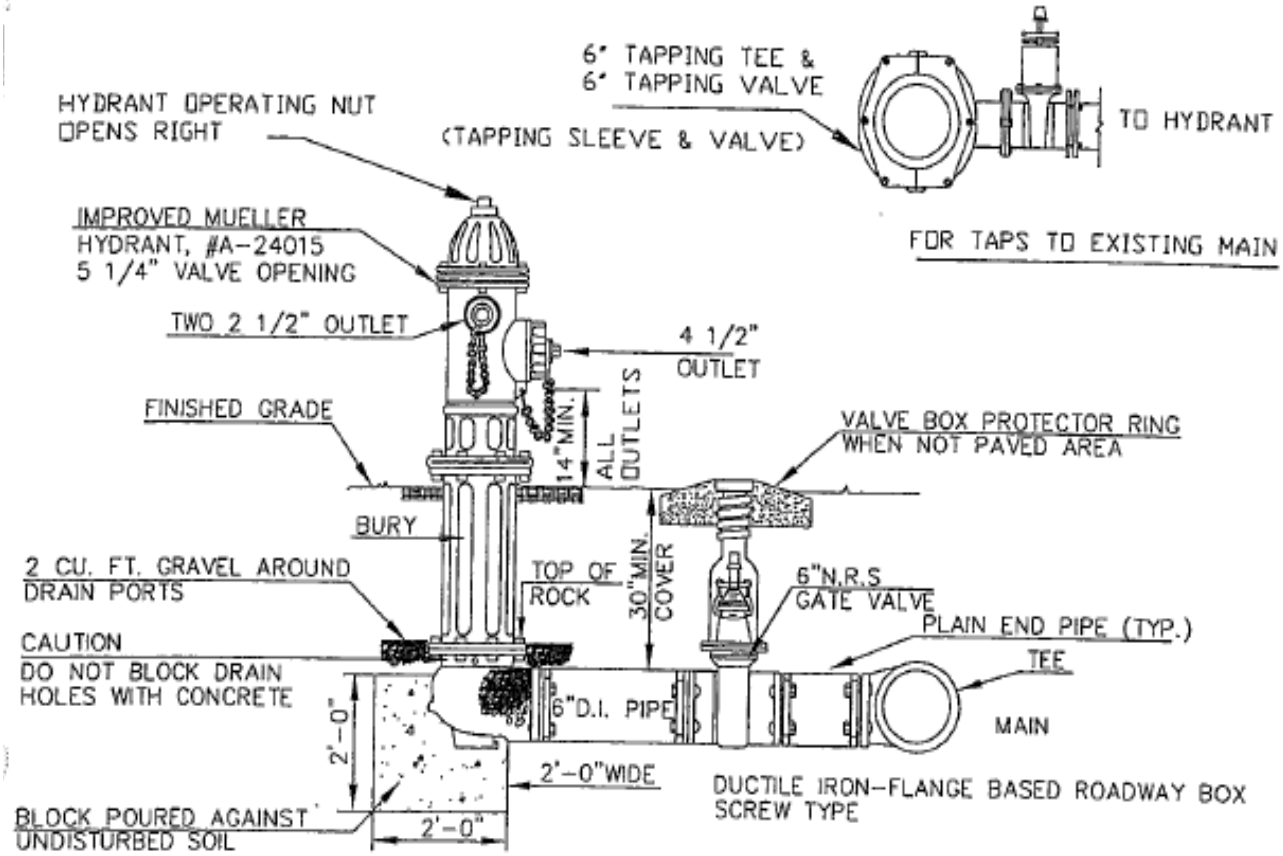

NOTE:

1.-ALL JOINTS TO BE MECHANICAL.

2.-HYDRANTS SHALL BE NO LESS THAN 3' NOR MORE THAN 6' FROM THE CURB OR THE EDGE OF A HARD SURFACE STREET OR ACCESS ROAD, EXCEPT THAT ALONG RURAL ROADS THROUGH UNDEVELOPED AREAS THE MAXIMUM DISTANCE MAY BE INCREASED TO 10'.

3.-HYDRANT MUST BE LOCATED SO AS TO BE UNOBSTRUCTED FOR 15' EITHER SIDE AS MEASURED ALONG THE CURB OR THE EDGE OF A HARD SURFACE STREET OR ACCESS ROAD. THIS AREA MUST BE FREE OF GROWTH AND OTHER OBSTRUCTIONS WHICH WOULD HINDER ACCESS TO THE HYDRANT.

4.-MINIMUM DISTANCE BETWEEN VALVE AND HYDRANT SHALL BE 3'.

5.-BENDS MAY BE USED IN HYDRANT LEAD TO FACILITATE HYDRANT LOCATION.

6.-GATE VALVES TO OPEN TO THE LEFT.

SOUTH CAROLINA REGISTERED PROFESSIONAL ENGINEER No. 15098

CITY OF COLUMBIA DEPARTMENT OF ENGINEERING COLUMBIA, SOUTH CAROLINA		
SCALE: NTS	APPROVED BY:	DRAWN BY:
DATE: 3-22-02		DEG

STANDARD HYDRANT DETAIL

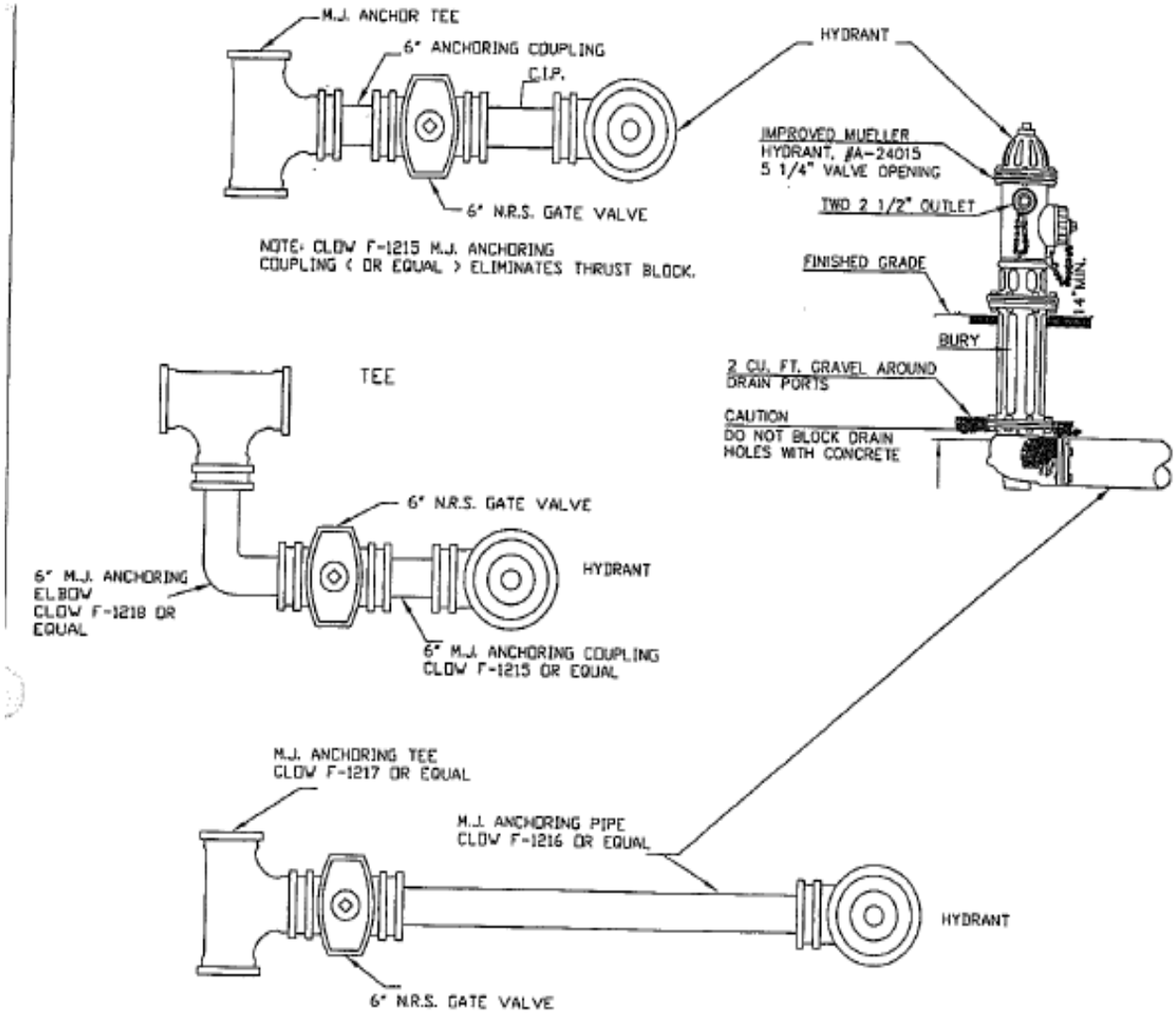

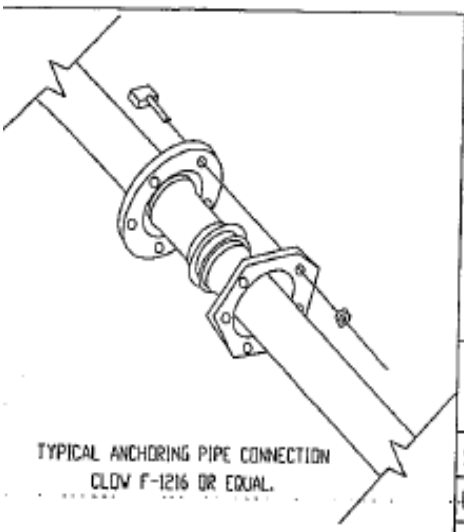

ATERNATE METHOD OF FIRE HYDRANT INSTALLATION

CITY OF COLUMBIA
DEPARTMENT OF ENGINEERING
COLUMBIA, SOUTH CAROLINA

SCALE: NTS	APPROVED BY:	DRAWN BY:
DATE: 3-27-02		DEG

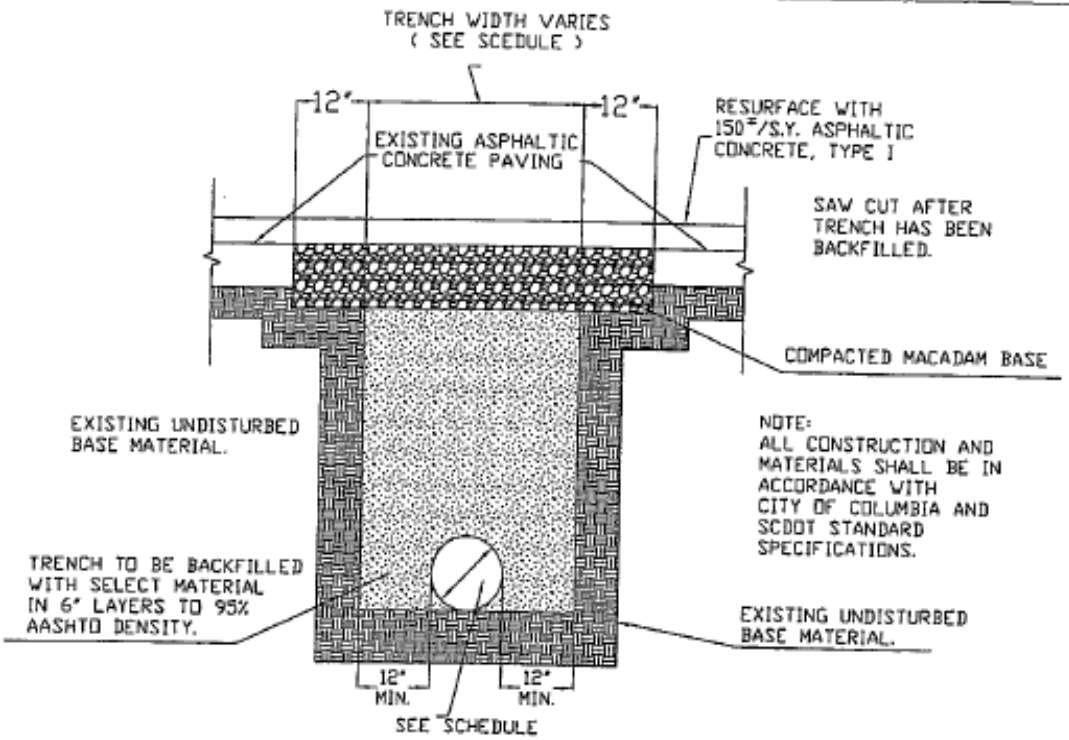

TYPICAL PERMANMENT REPAIR SECTION ROAD PAVEMENT

NOT TO SCALE
FOR USE ONLY ON SECONDARY ROADS WITH LOW VOLUME OF TRAFFIC WHERE CONSTRUCTION IS GENERALLY PARALLELING THE CENTERLINE OF THE PAVING AND EXISTING STREET DOES NOT HAVE CURB AND GUTTER.

MIN. TRENCH WIDTH SCHEDULE					
PIPE SIZE I.D.	12" & LESS	15" TO 21"	24" TO 30"	33" TO 54"	60" & OVER
TRENCH WIDTH (W/O SHORING)	36"	I.D. + 24"	I.D. + 30"	O.D. + 30"	O.D. +36"
TRENCH WIDTH (W/ SHORING)	48"	I.D + 36"	I.D. + 42"	O.D. + 42"	O.D. +48"

TYPICAL PERMANENT REPAIR SECTIONS

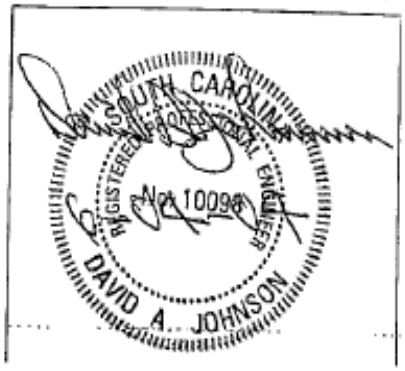

FIRE HYDRANT GUARD POSTS

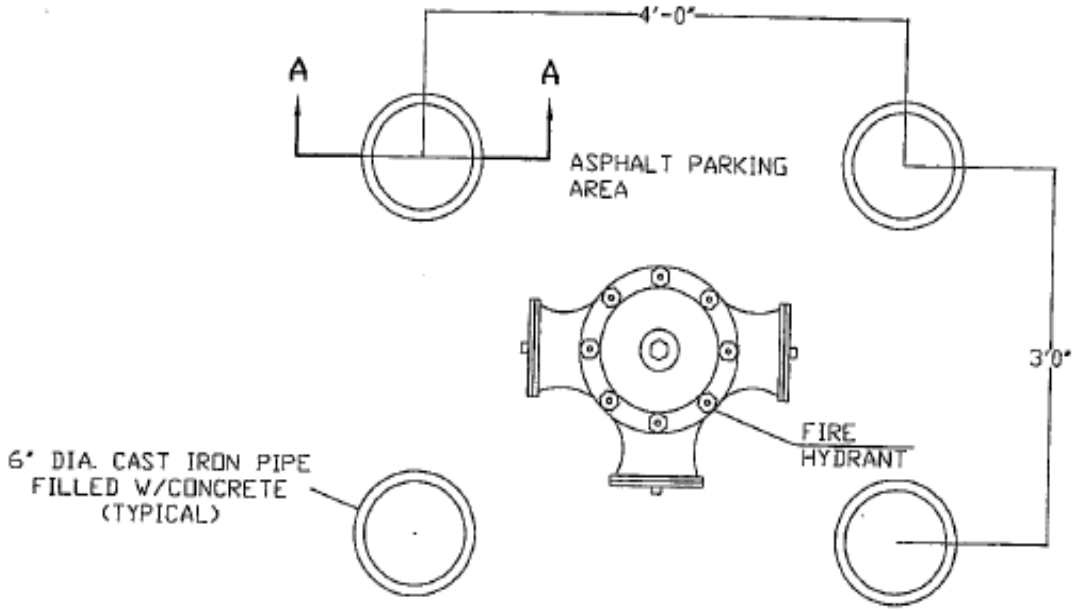

PLAN VIEW

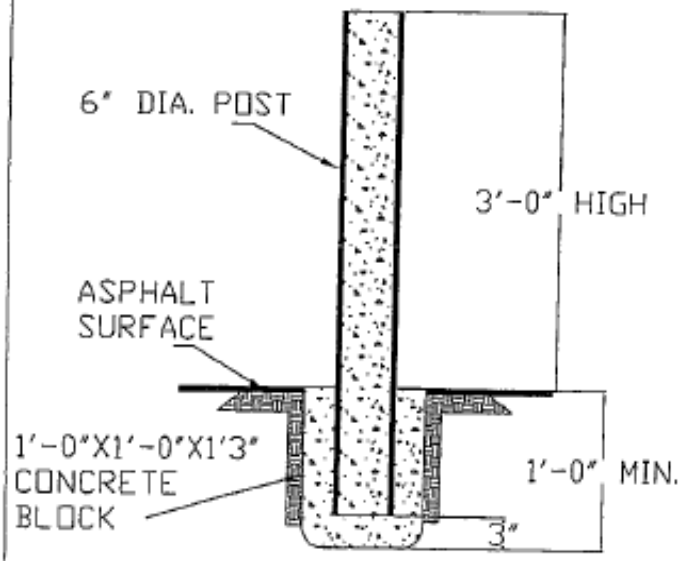

NOTE:
MINIMUM POST DEPTH IN FOOTING MAY BE INCREASED AS NECESSARY IN AREAS OF HEAVY TRUCK TRAFFIC OR AS DETERMINED BY THE CITY ENGINEER.

SECTION A-A

STANDARD DETAIL WC# 4A

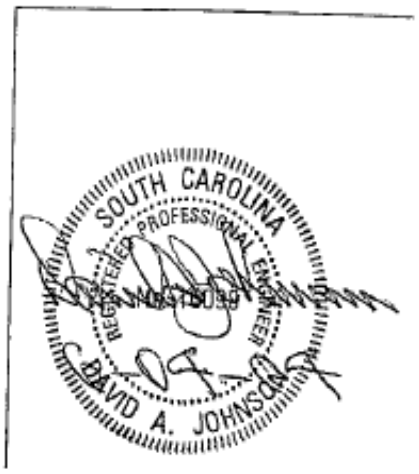

BLOWOFF DETAIL

(NOT TO SCALE)

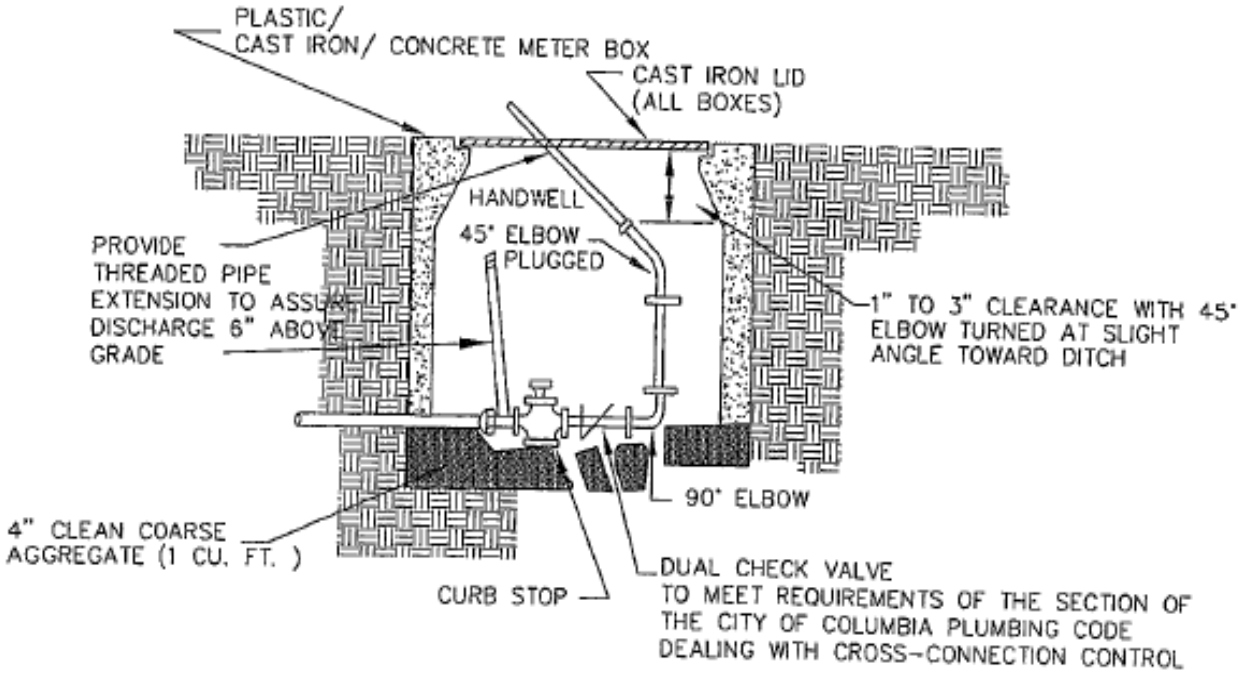

DIA. OF LINES (IN.)	FLOW REQUIRED (GPM)	MIN. ORIFICE SIZE	RECOMMENDED ▲ BLOWOFF SIZE (IN.)
2	25	0.56	3/4
2 1/2	40	0.71	1.
3.	60	0.87	1 1/4
4.	100	1.10	1 1/2
6.	220	1.65	2.
8	400	2.21	2 1/2

▲ UNDER MOST SITUATIONS, THE ABOVE TABLE CAN BE USED. BUT, IN SOME AREAS WHERE THE STATIC PRESSURES ARE EXCEEDINGLY HIGH, SMALLER BLOWOFFS MAY BE NECESSARY.

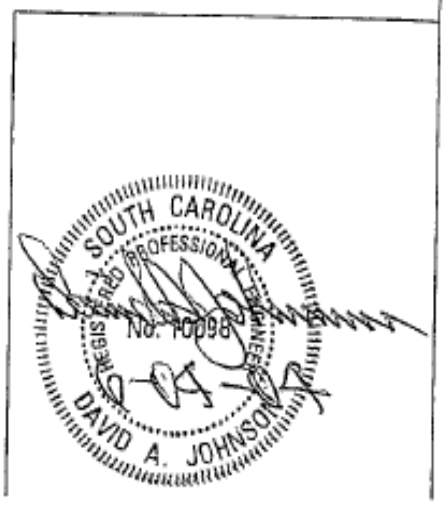

AIR RELEASE VALVE

(NOT TO SCALE)

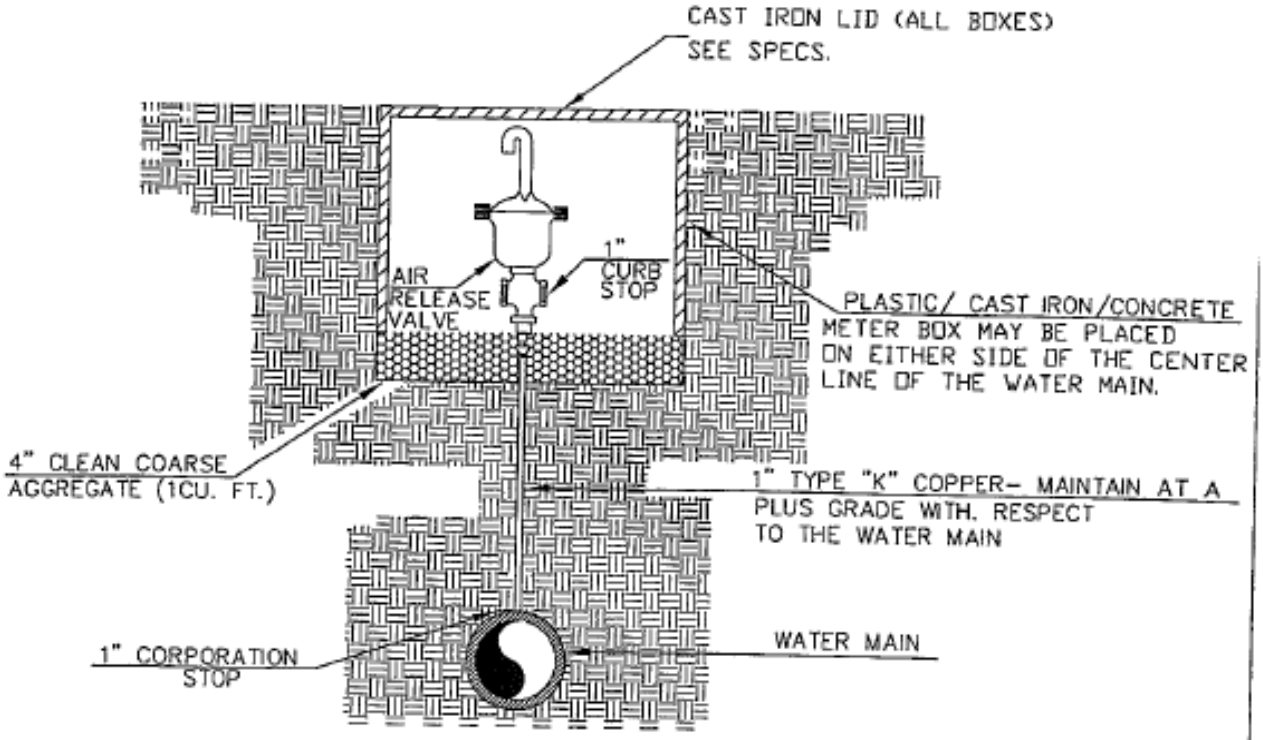

NOTE:
THE OPEN END OF THE AIR RELEASE VALVE MUST BE EXTENDED TO THE TOP OF THE PIT AND PROVIDED WITH A SCREENED DOWNWARD FACING ELBOW.

NOTE:
AIR RELEASE VALVE TO BE CRISPIN TYPE "N" MODEL NO. P10 WITH 1/4" ORIFICE, APCO MODEL NO. 200.A WITH 1/4" ORIFICE, VAL-MATIC MODEL NO. 38 WITH 3/16" ORIFICE, OR APPROVED EQUAL, ALL SHALL HAVE A WORKING PRESSURE OF 0 TO 150 PSI AND A 1" NPT CONNECTION.

SOUTH CAROLINA PROFESSIONAL ENGINEER
REGISTERED
No. 10098
DAVID A. JOHNSON

COLUMBIA ENGINEERING DEPARTMENT

VALVE BOX PROTECTOR RING DETAIL
GATE VALVE BOX DETAIL

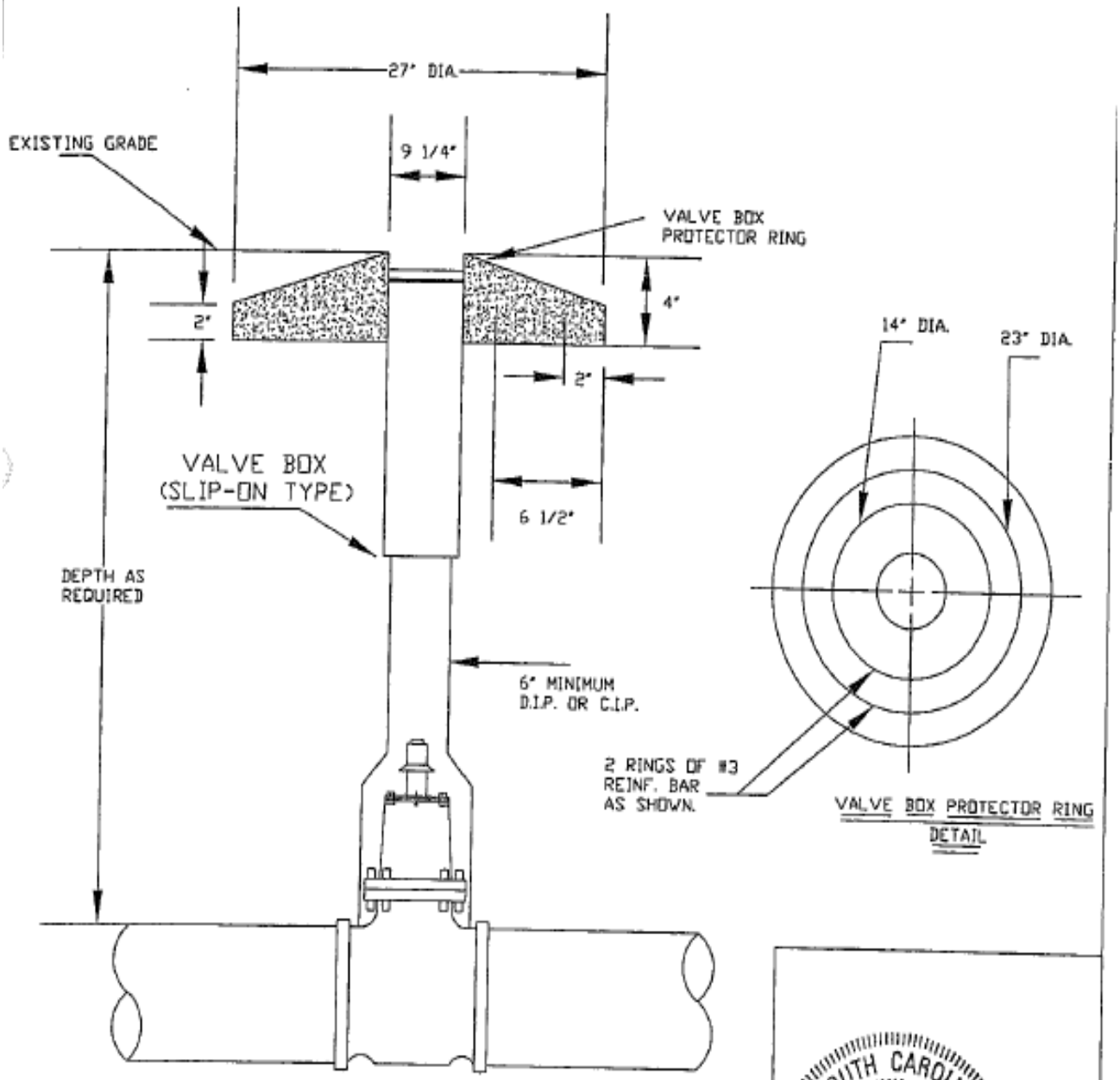

NOTES:
1-GATE VALVES SHALL OPEN LEFT.
2-SCREW TYPE VALVE BOX MAY BE USED AS ALTERNATE.
3-GATE VALVES 24" AND LARGER MUST BE
MECHANICAL JOINT AND EQUIPPED WITH BY-PASS VALVES.

SOUTH CAROLINA
REGISTERED PROFESSIONAL ENGINEER
No. 10098
DAVID A. JOHNSON

BUTTERFLY VALVE BOX DETAIL

(NOT TO SCALE)

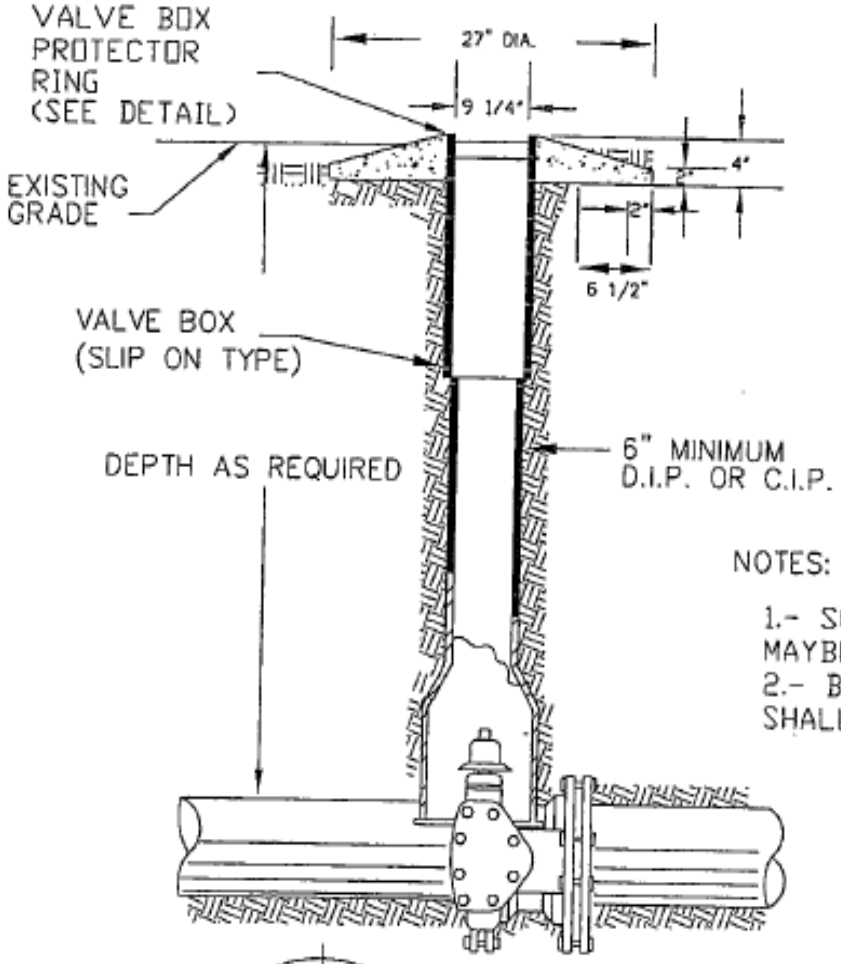

NOTES:

1.- SCREW TYPE VALVE BOX MAYBE USED AS ALTERNATE.
2.- BUTTERFLY VALVES SHALL OPEN LEFT.

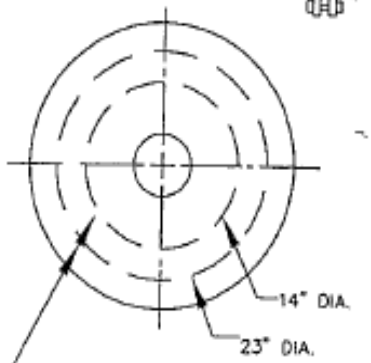

VALVE BOX PROTECTOR RING DETAIL

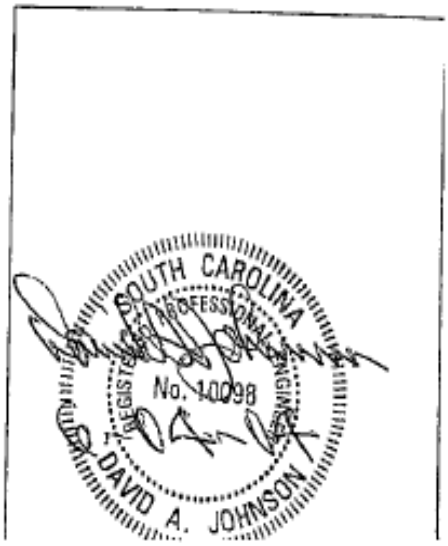

CONCRETE PIPE ENCASEMENT

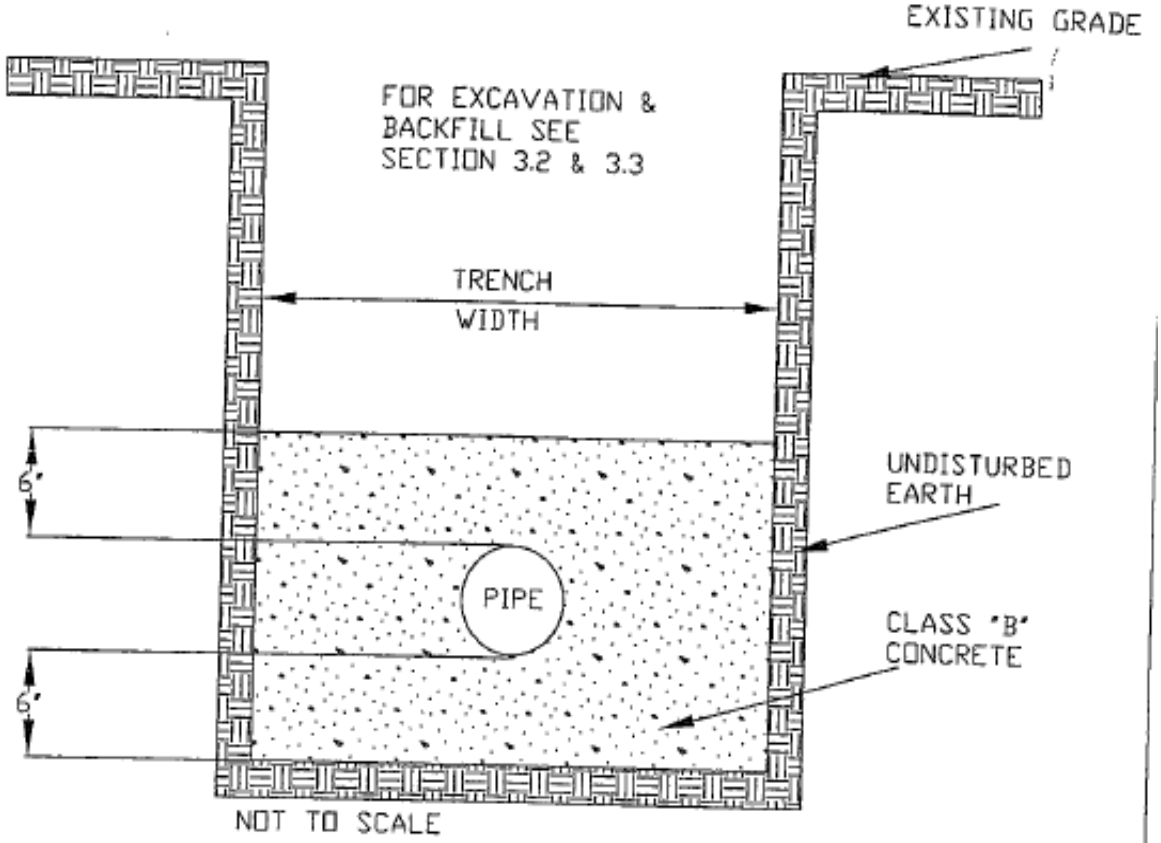

MINIMUM TRENCH WIDTH

PIPE SIZE I.D.	6"	8"	10"	12"	16"	18"
TRENCH WIDTH	2'-6"	2'-8"	2'-10"	3'-0"	3'-4"	3'-6"

TRENCH WIDTH DIMENSIONS ARE AT AND BELOW THE TOP OF THE PIPE.

CONCRETE USED IN ENCASEMENT SHALL CONFORM TO SECTION 701 OF THE SCDOT SPECIFICATIONS FOR HIGHWAY CONSTRUCTION LATEST EDITION.

SEE SECTION 3.2.8 FOR PIPE OVER 18" DIA.

STANDARD PIPE BEDDING AND BACKFILLING DETAIL

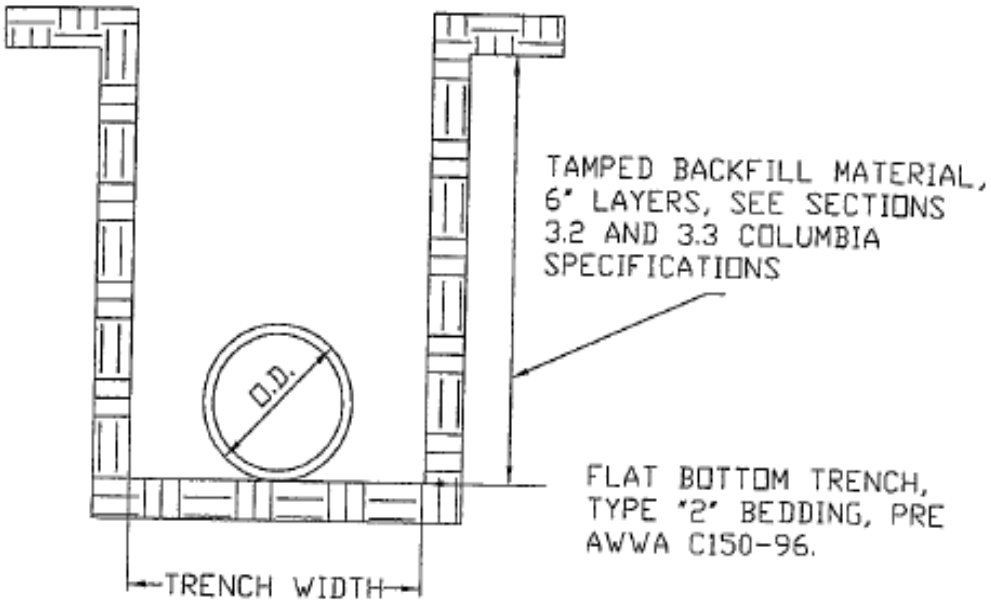

BACKFILL FOR DUCTILE IRON PIPE

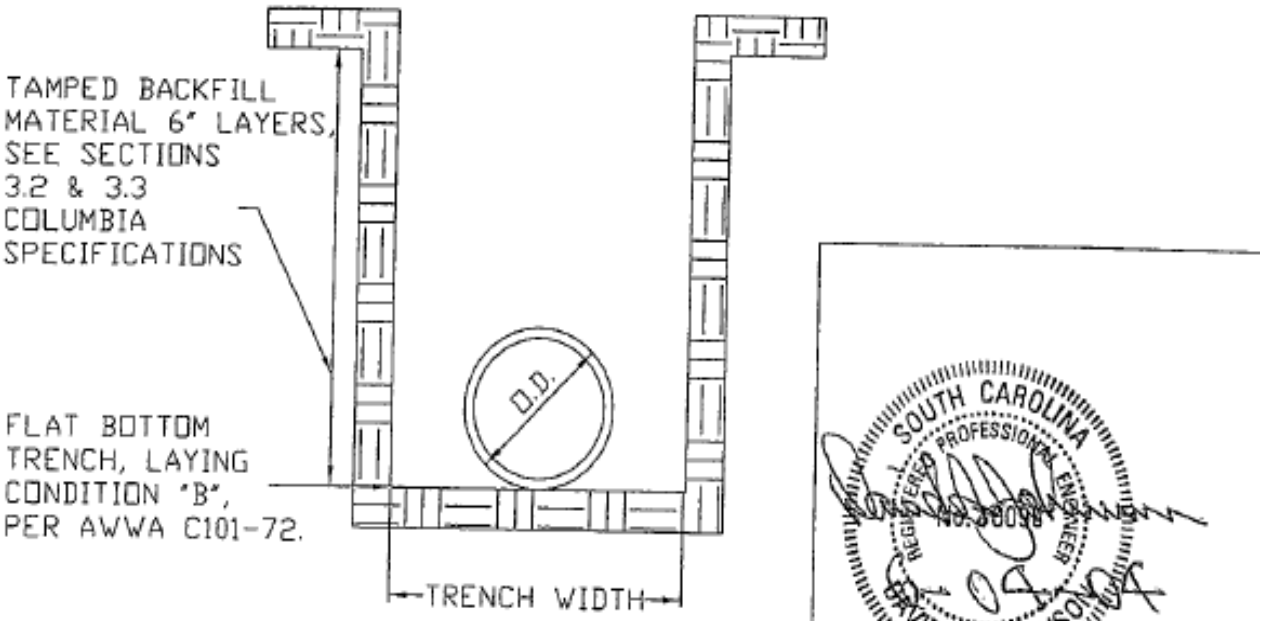

BACKFILL FOR GRAY CAST IRON PIPE

STANDARD PIPE BEDDING AND BACKFILLING DETAIL

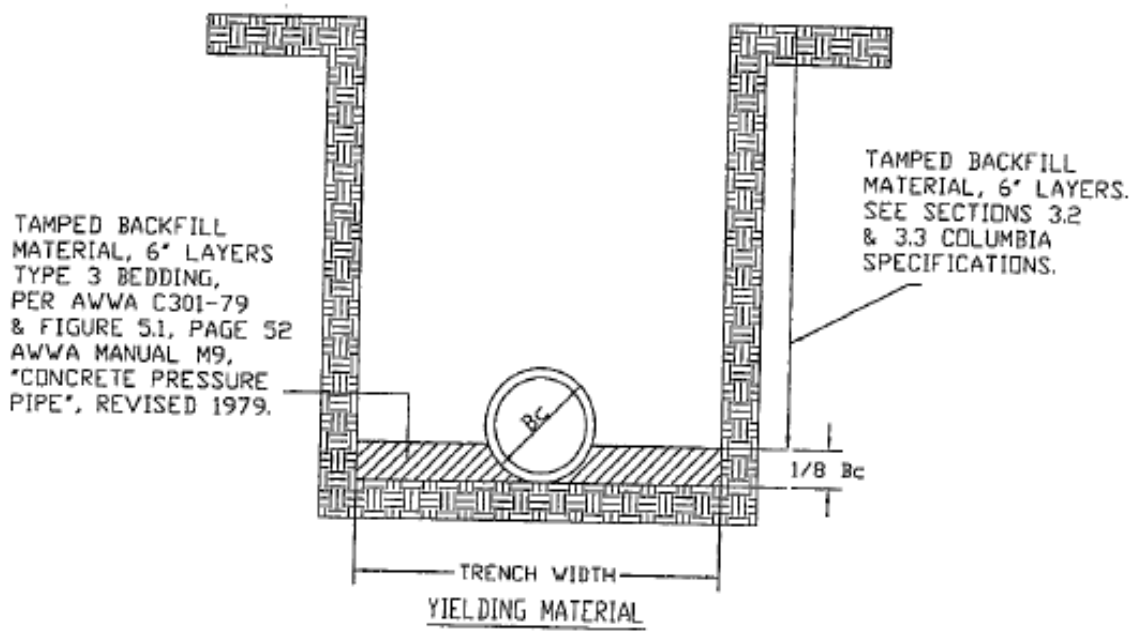

YIELDING MATERIAL

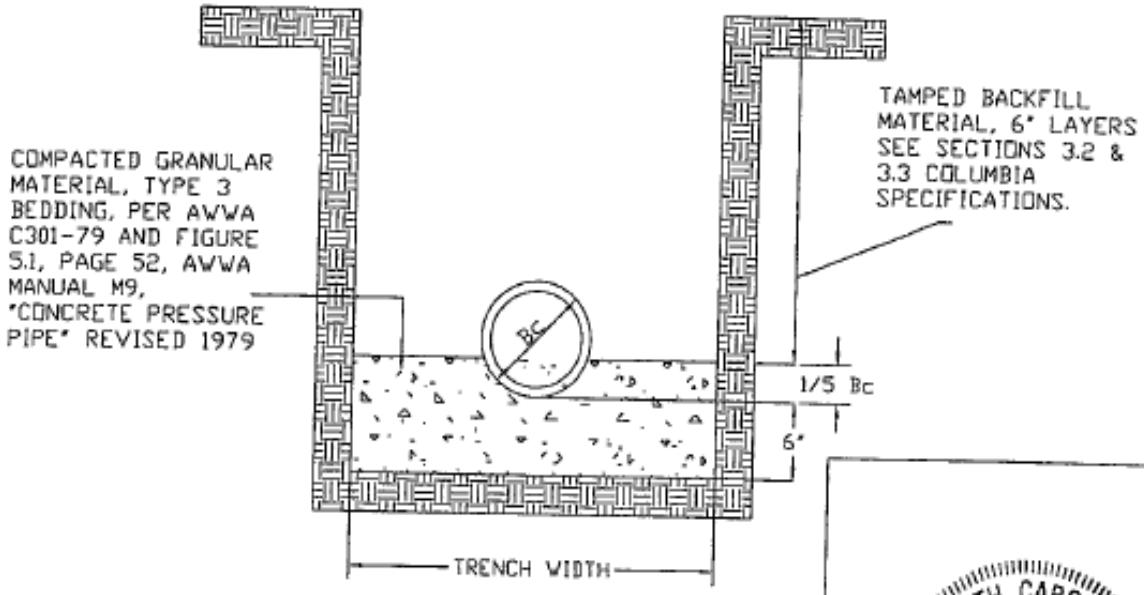

IN ROCK OR UNYIELDING MATERIAL

SOUTH CAROLINA REGISTERED PROFESSIONAL ENGINEER No. 10698 DAVID A. JOHNSON

BACKFILL FOR PRESTRESSED CONCRETE CYLINDER PIPE

STANDARD PIPE BEDDING AND BACKFILLING DETAIL PVC PIPE

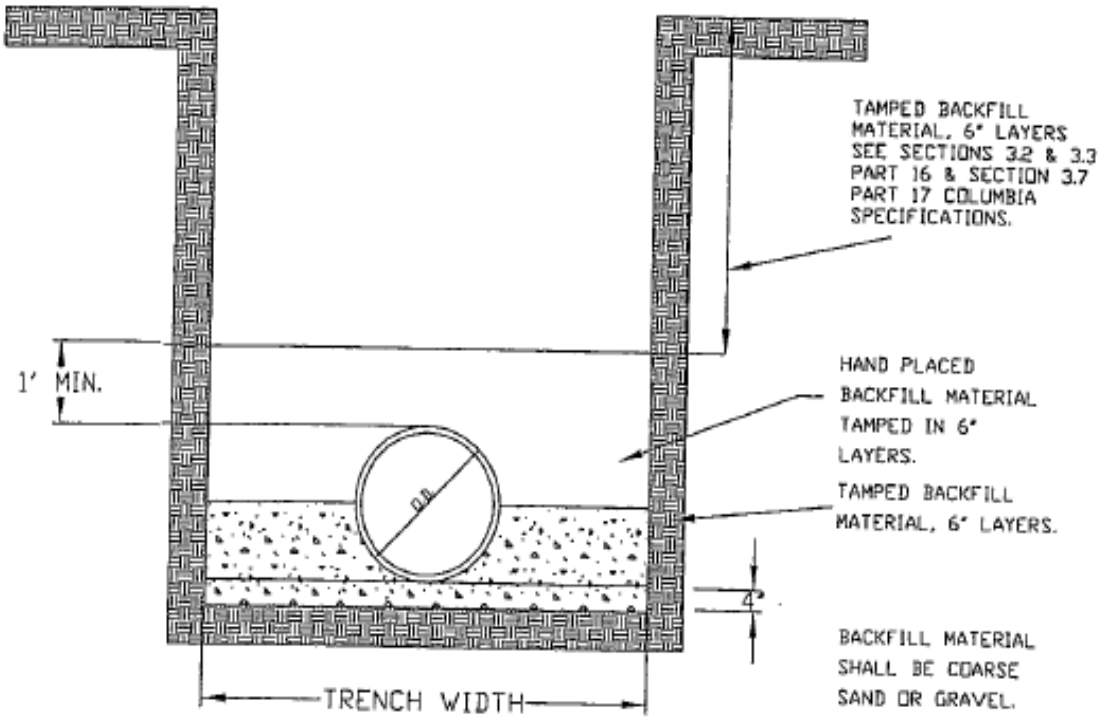

THE PIPE IS TO BE BEDDED IN COMPACTED 6" LAYERS TO THE SPRINGING LINE FIRST, THEN BACKFILLED WITH HAND PLACED MATERIAL COMPACTED IN 6" LAYERS TO A DEPTH OF 1' MIN. ABOVE THE PIPE. SEE SECTIONS 3.2 & 3.3 (PART 16) AND SECTION 3.7 (PART 17) COLUMBIA SPECIFICATIONS FOR REMAINDER OF THE BACKFILL.

THRUST BLOCK DETAIL
PLUG & DEAD END
MAINS

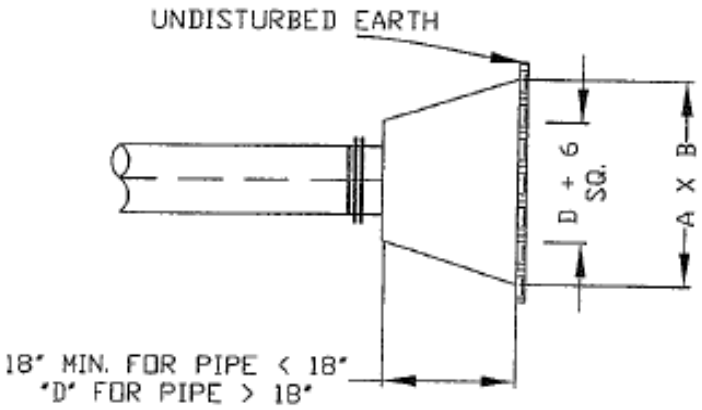

PLAN & ELEVATION
PLUGS & DEAD END MAINS

MIN. THRUST BLOCK BEARING AREAS PLUGS & DEAD END MAINS (S. F.)	
SIZE	A X B
4	0.9
6	2.1
8	3.8
12	8.5
16	15.1
18	19.1
20	23.6
24	33.9
30	53.0
36	76.3
42	103.9
48	135.7
54	171.8

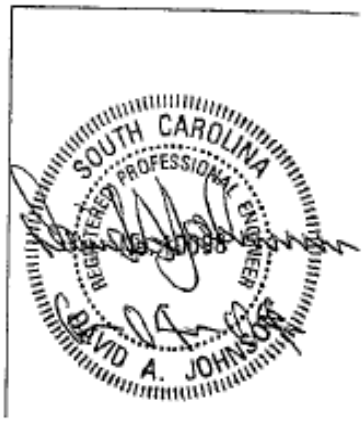

COLUMBIA ENGINEERING DEPARTMENT

CONCRETE BLOCKING DIMENSIONS

PIPE SIZE X	A	B	C	MBA *2 (SQ. FT.)	*1
(* DENOTES BRANCH SIZE) TEES					
*2" - 6"	2' - 0"	2' - 0"	1' - 4"	2.7	0.13
* 8"	2' - 0"	2' - 6"	1' - 10"	4.6	0.2
* 10"	2' - 6"	3' - 6"	2' - 0"	7	0.39
* 12"	2' - 6"	4' - 6"	2' - 3"	10.1	0.54
* 16"	3' - 0"	6' - 0"	2' - 10"	17	1.08
* 18"	3' - 0"	7' - 0"	3' - 0"	21	1.33
* 24"	4' - 0"	10' - 0"	3' - 9"	37.5	3.17
* 30"	5' - 0"	12' - 0"	4' - 10"	58	5.96
90 DEGREE BENDS					
2" - 6"	2' - 0"	2' - 9"	1' - 3"	3.4	0.16
8"	2' - 0"	3' - 3"	2' - 0"	6.5	0.28
10"	2' - 6"	4' - 0"	2' - 6"	10	0.53
12"	2' - 6"	5' - 0"	2' - 9"	13.8	0.73
16"	3' - 0"	6' - 0"	4 - 0"	24	1.5
18"	3' - 0"	7' - 0"	4' - 0"	29.3	1.85
24"	4' - 6"	12' - 0"	4' - 5"	53	4.94
30"	6' - 0"	14' - 0"	5' - 10"	81.7	9.97
45 DEGREE BENDS					
2" - 6"	2' - 0"	2' - 0"	1' - 0"	2	0.11
8"	2' - 0"	2' - 6"	1' - 5"	3.5	0.17
10"	2' - 6"	3' - 6"	1' - 6"	5.2	0.29
12"	2' - 6"	4' - 6"	1' - 8"	7.5	0.4
16"	3' - 0"	6' - 0"	2' - 2"	13	0.8
18"	3' - 0"	6' - 4"	2' - 6"	15.8	1.1
24"	3' - 0"	6' - 9"	4' - 3"	28.7	1.75
30"	3' - 6"	9' - 3"	4' - 9"	43.9	3.22
22 1/2 DEGREE BENDS					
2" - 6"	2' - 0"	1' - 0"	1' - 0"	1	0.08
8"	2' - 0"	1' - 9"	1' - 0"	1.7	0.11
10"	2' - 6"	2' - 3"	1' - 3'	2.8	0.19
12"	2' - 6"	2' - 6"	1' - 6"	3.7	0.24
16"	3' - 0"	3' - 0"	2' - 3"	6.5	0.48
18"	3' - 0"	3' - 4"	2' - 6"	8.3	0.68
24"	3' - 0"	4' - 6"	3' - 5"	15.4	1.04
30"	3' - 6"	5' - 0"	4' - 6"	22.5	1.93
11 1/4" DEGREE BENDS					
2" - 6"	2' - 0"	1' - 0"	0' - 6"	0.5	0.06
8"	2' - 0"	1' - 3"	0' - 9"	0.9	0.08
10"	2' - 6"	1' - 6"	1' - 0"	1.5	0.14
12"	2' - 6"	2' - 0"	1' - 0"	2	0.17
16"	3' - 0"	2' - 6"	1' - 4"	3.3	0.3
18"	3' - 0"	2' - 9"	1' - 6"	4.1	0.38
24"	3' - 0"	3' - 3"	2' - 3"	7.3	0.65
30"	3' - 6"	3' - 9"	3' - 0"	11.2	1.22

*1 - ESTIMATED C.Y. CONC. FOR TEES & BENDS

*2 - MINIMUM BEARING AREA (MBA) IS BASED ON SOIL BEARING CAPACITY OF 2000 PSF.

THRUST BLOCK DETAILS

SOUTH CAROLINA REGISTERED PROFESSIONAL ENGINEER No. 10098 DAVID A. JOHNSON

COLUMBIA ENGINEERING DEPARTMENT

TOP SLAB, HATCH REINFORCEMENT DETAIL

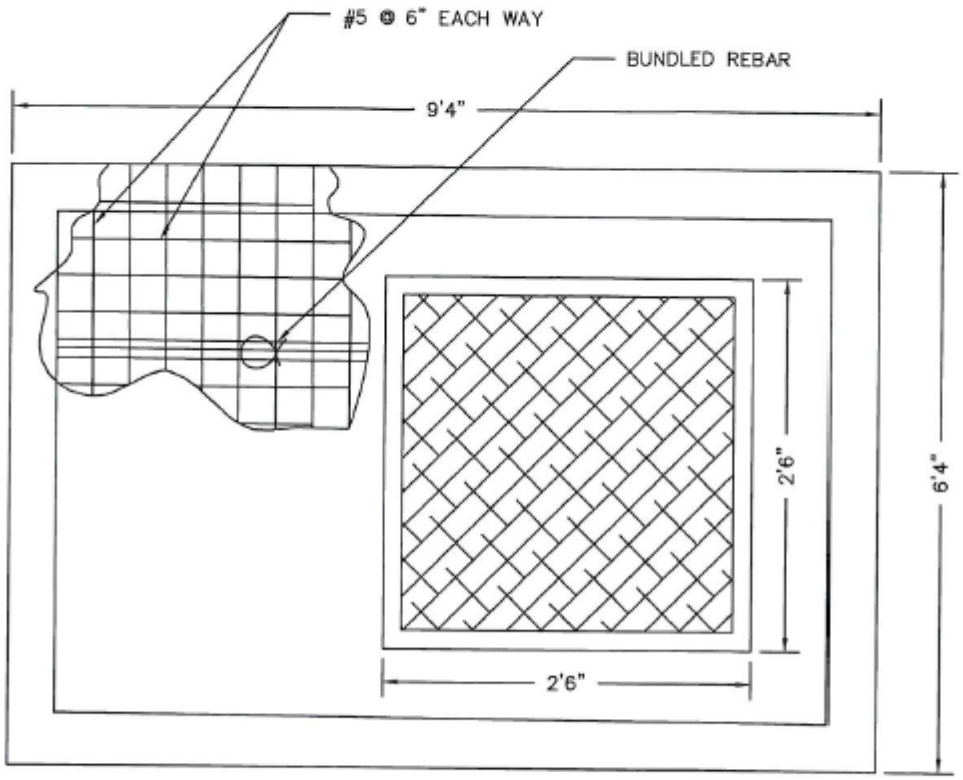

NOTE: PREFABRICATED LID SHALL MEET ALL LOAD BEARING REQUIREMENTS IF METER PIT IS LOCATED IN TRAFFIC AREA.

APPROVED BY:

SOUTH CAROLINA REGISTERED PROFESSIONAL ENGINEER No. 19071 DANA R. HIGGINS 4/25/14

CITY ENGINEER

CITY OF COLUMBIA, S.C. JUSTITIA VIRTUTUM REGINA

We Are Columbia

CITY OF COLUMBIA UTILITIES AND ENGINEERING DEPARTMENT

STANDARD DETAIL WM

DATE:	DRAWN BY:
7-8-13	DLA

METER PIT IN TRAFFIC AREA

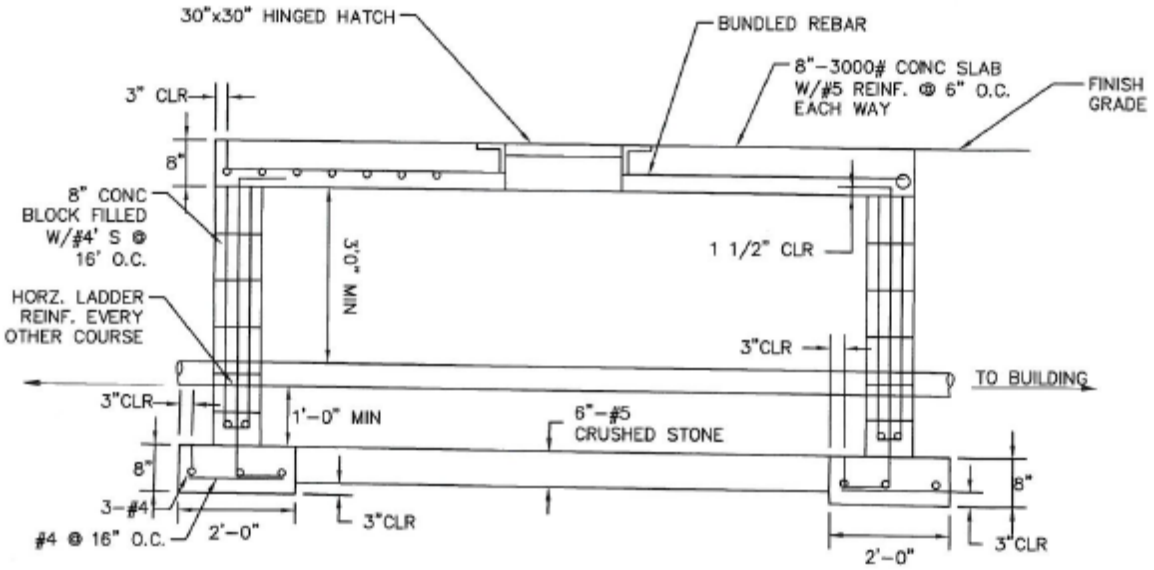

APPROVED BY:

SOUTH CAROLINA PROFESSIONAL ENGINEER No. 19071 DANA R. HIGGINS 4/28/14

CITY ENGINEER

CITY OF COLUMBIA, S.C. JUSTITIA VIRTUTUM REGINA

We Are Columbia

CITY OF COLUMBIA UTILITIES AND ENGINEERING DEPARTMENT

STANDARD DETAIL WM

DATE:	DRAWN BY:
7-8-13	DLA

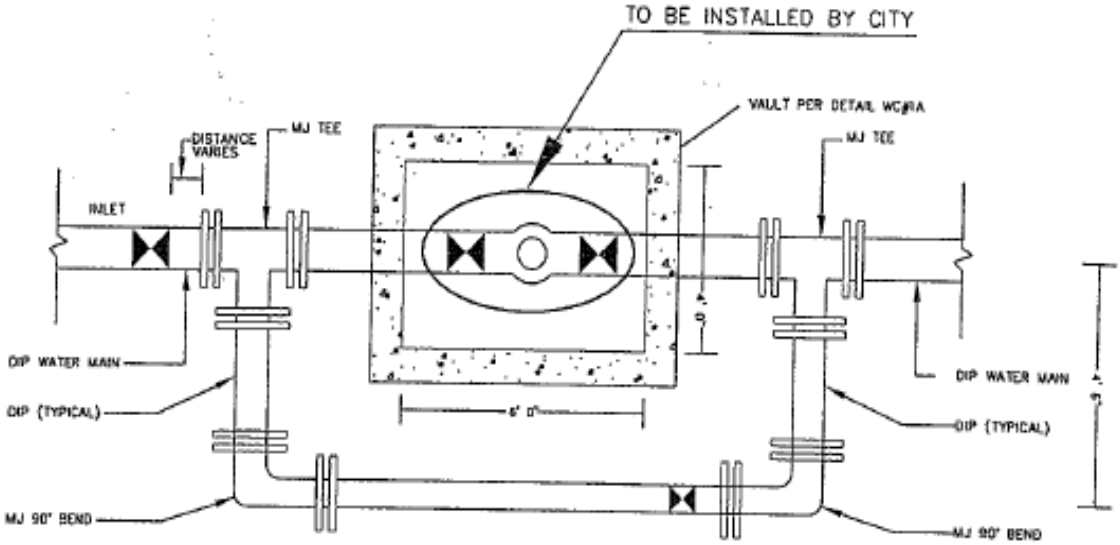

NOTES

1. ALL MECHANICAL JOINT FITTINGS SHALL BE RESTRAINED WITH MEGALUGS OR APPROVED EQUAL.
2. DUCTILE IRON PIPE SHALL RUN CONTINUOUS THROUGH VAULT WITH NO JOINTS. PIPE SHALL BE LEVEL THROUGH BOX.

METER VAULT DETAIL WITH TRUE BY-PASS

NOTE: TO BE USED FOR CRITICAL OPERATION FACILITIES

SOUTH CAROLINA REGISTERED PROFESSIONAL ENGINEER No. 10098 DAVID A. JOHNSON

CITY OF COLUMBIA DEPARTMENT OF ENGINEERING COLUMBIA, SOUTH CAROLINA		
SCALE: NTS	APPROVED BY:	DRAWN BY: JPM
DATE: 06/04/04		
METER VAULT DETAIL		

ROUTING OF TRACER WIRE INSIDE VALVE BOX

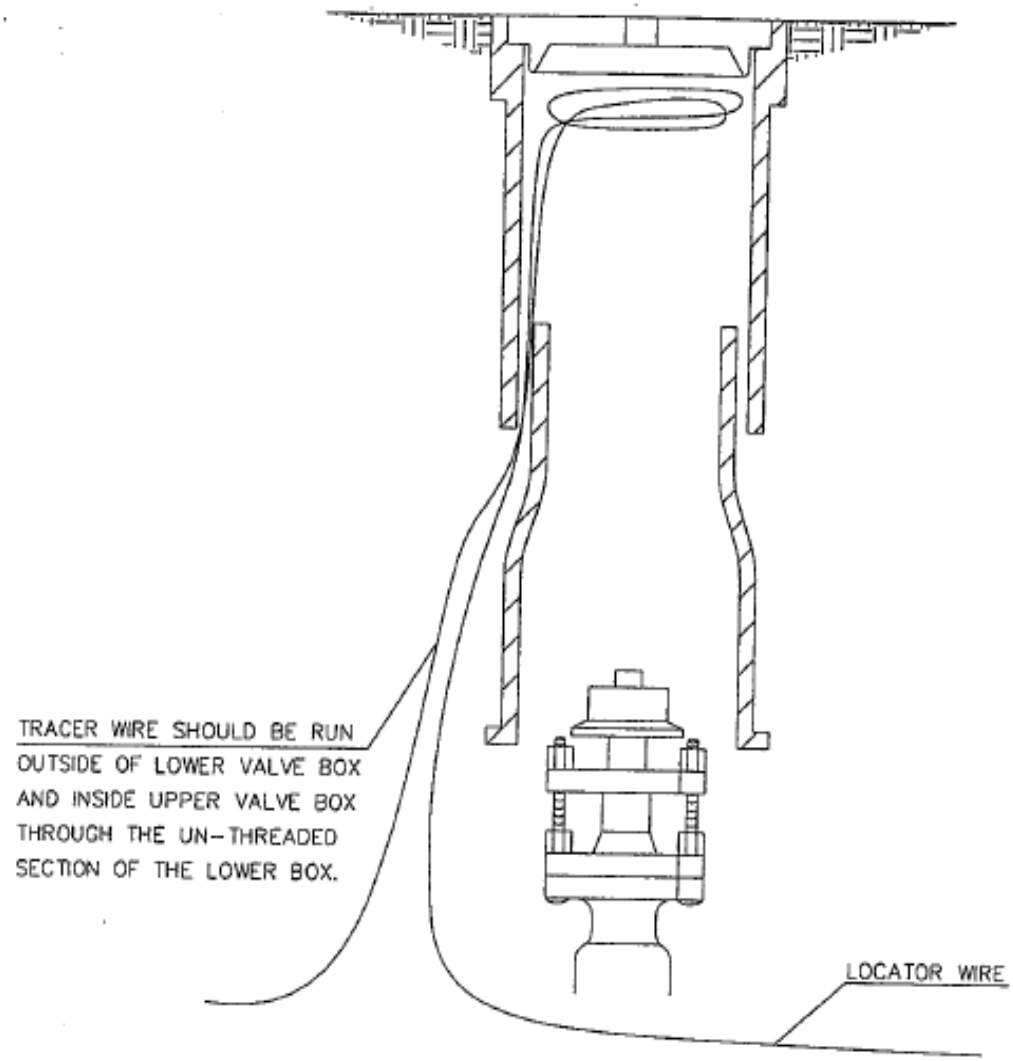

SOUTH CAROLINA
REGISTERED PROFESSIONAL ENGINEER
No. 10098
DAVID A. JOHNSON

CITY OF COLUMBIA
DEPARTMENT OF ENGINEERING
COLUMBIA, SOUTH CAROLINA

SCALE: NTS	APPROVED BY:	DRAWN BY:
DATE: 06/04/04		JPM

PART 17: SPECIFICATION FOR SANITARY SEWERS
TABLE OF CONTENTS

Paragraph	Description	Page No.
17.1	General	17-1
17.2	Construction Materials	17-3
17.3	Construction Methods	17-10
17.4	Testing for Acceptance of Sanitary Sewers	17-24
17.5	Measurement and Payment	17-24

CITY OF COLUMBIA REGULATIONS
PART 17
SPECIFICATIONS FOR SANITARY SEWERS

17.1 GENERAL – Construction detail drawings are a part of these specifications. No project will be constructed that does not comply with Part 3, Design of Sanitary Sewers.

17.1.1 These specifications cover materials and procedures for the complete installation of certain sanitary sewers and appurtenances incident to the construction of extensions to be connected to the City of Columbia, South Carolina Sewerage System. All construction, repair and replacement of sanitary sewer mains, service connections and appurtenances shall be carried out in accordance with these standard specifications, General Specifications, any Special Provisions, and in conformity with the line and grade as shown on the plans.

17.1.2 Pipe and appurtenances shall be installed at the locations shown on the plans and to the position, alignment and grade shown thereon, or in the event of grade conflicts, as directed by the Engineer. The Contractor shall erect, mark and maintain suitable barricades to protect the work and maintain public safety.

17.1.3 All pipe, special castings and fittings for sanitary sewer construction shall be furnished in accordance with specifications as outlined herein and in the Special Provisions and proposal form.

17.1.4 Sewer Pipe – Pipe for sanitary sewers shall be SDR polyvinyl chloride (PVC) pipe, centrifugally cast fiberglass reinforced polymer mortar pipe (CCFRPMP) or, where indicated, ductile iron pipe. All pipe shall be first quality, with smooth interior and exterior surfaces, free from cracks, blisters, honeycombs and other imperfections, and true to theoretical shapes and forms throughout the full length. Pipe material shall be consistent from manhole to manhole unless approved by City Engineer using fitting as specified in Section 2.1.1. All pipe shall be subject to inspection by the Engineer at the pipe plant, trench, or other point of deliver, for the purpose of culling and rejecting pipe, independent of laboratory tests, which does not conform to the requirements of these specifications. Such pipe shall be marked by the Engineer and the Contractor shall remove it from the project site upon notice being received of its rejection. All sewer pipe shall be tested by an independent laboratory, approved by the City Engineer, in accordance with applicable specifications. Character of tests shall be as follows:

17.1.4.1 Ductile Iron Pipe: As required by ANSI A21.6, latest revision

17.1.4.2 SDR Polyvinyl Chloride (PVC) Pipe: As required by ANSI/ASTM D 3034-78.

17.1.5 Water used for construction and testing will be furnished by the City through approved connections to the City water system. Check valves to reduce possibility of contamination will be furnished by the contractor when directed by the City Engineer.

17.1.6 All materials furnished by the Contractor shall be delivered and distributed at the site by the Contractor. Materials furnished by the owner shall be picked up by the Contractor at points designated by the City and hauled to the distribution site.

17.1.7 Sewer pipe and appurtenances shall be loaded and unloaded by lifting with hoists or skidding so as to avoid shock or damage. Under no circumstances shall such materials by dropped. Pipe handled on skidways shall not be skidded or rolled against pipe already on the ground.

17.1.8 In distributing the material at the site of the work, each piece shall be unloaded opposite or near the place where it is to be laid in the trench.

17.1.9 Pipe shall be so handled that the coating and lining will not be damaged. If, however, any part of the coating or lining is damaged, the repair shall be made by the Contractor at his expense in a manner satisfactory to the Engineer.

17.1.10 Affidavit of Compliance – The manufacturer shall furnish an affidavit that all material delivered does comply with the requirements of these specifications.

17.1.11 The Contractor shall proceed with caution in the excavation and preparation of the trench so that the exact location of underground structures, both known and unknown, may be determined. He shall be held responsible for the repair of such structures when broken or otherwise damaged.

17.1.12 All pipe shall be laid to the depth shown on the contract drawings. Any variation therefrom shall be made only at the order of the Engineer.

17.1.12.1 Minimum depth of cover for any sanitary sewer main between manholes shall be three feet unless encasement and/or iron pipe is used.

17.1.12.2 Minimum distance from the top of ring to top of pipe for manholes shall be four feet for four feet diameter manholes. Larger diameter manholes shall be proportionately deeper.

17.1.12.3 Depths less than specified above required special approval by the engineer. It shall be incumbent upon the Contractor to determine if such approval has been granted. Work not meeting this specification shall be removed and replaced properly at no expense to the City.

17.1.13 Ledge rock, boulders, and large stones shall be removed to provide a clearance of at least six inches below and on each side of all pipe, and fittings. The specified minimum clearance is the minimum clear distance that will be permitted between any part of the pipe and appurtenance being laid and any part, projection, or point of rock, boulder, or stone.

17.1.14 The trench shall be dug so that the pipe can be laid to the alignment and depth required. The trench shall be so braced and drained that the workmen may work in it safely and efficiently. It is essential that the discharge of trench dewatering pumps be conducted to natural drainage channels, drains, or storm sewers. The length of trench excavated in advance of the pipe laying, shall be kept to a minimum, and in no case shall it exceed three hundred (300) feet unless

specifically authorized by the Engineer. In no case shall two consecutive intersections be closed to traffic due to uncompleted work. Each intersection must be opened to traffic before closing of the next one.

17.1.15 The width of the trench shall be ample to permit the pipe to be laid and joined properly, and the backfill to be placed and compacted as specified. Trenches shall be of such extra width, when required, as will permit the convenient placing of timber supports, sheeting and bracing, and handling of specials. No extra payment will be allowed for this work, the cost of which will be included in the Contractor's unit bid prices.

17.1.16 Construction in Easements – In easements across private property, the Contractor shall confine all operations to the easement area and shall be responsible and liable for all damage outside of the easement area. Trees, fences, shrubbery or other type of surface improvements located in easements shall be protected during construction. The provisions above shall apply to all easement areas as well as to public rights-of-way. Precautions shall be taken by adequate sheeting or other approved method to prevent any cave-in or disturbance beyond the easement limits or damage to improvements within the easement. In general, the easement area is intended to provide reasonable access and working area for efficient operations to be performed within the restrictions shown on the plans. The Contractor shall be responsible for organizing his operations to perform within the restrictions shown on the plans. When requested, the owner shall make available to the bidders and furnish to the contractor a copy of the construction easements. (See General Specifications).

17.1.17 Barricades, Guards and Safety Provisions – To protect persons from injury and to avoid property damage, adequate barricades, construction signs, torches, lanterns and guards as required shall be place and maintained by the Contractor at his expense during the progress of the construction. All material piles, equipment and pipe which may serve as obstructions to traffic shall be enclosed by fences or barricades and shall be protected by proper lights when the visibility is poor. The rules and regulations of O.S.H.A. and appropriate authorities respecting safety provisions shall be observed. (See General Specifications).

17.1.18 Protection of Property and Surface Structures – Trees, shrubbery, fences, poles and all other property and surface structures shall be protected during construction operations unless their removal is authorized by the Engineer. Any fences, poles or other manmade surface improvements which are moved or disturbed by the Contractor shall be restored to their original condition, after construction is completed, at the Contractor's expense. Any trees, shrubbery or other vegetation which are approved or ordered for removal by the Engineer shall be removed completely, including stumps and roots, by the Contractor. Responsibility for any damage or claims for damage caused by construction operations to shrubbery or other landscape improvements which were not authorized for removal by the Engineer shall be assumed by the Contractor.

17.2 CONSTRUCTION MATERIALS

17.2.1 Ductile Iron Pipe – Ductile iron pipe shall be manufactured in accordance with ANSI specification A 21.51 (AWWA C151) of latest revision. Joints shall be Bell and Spigot, Push-on (Glamorgan Tyton, American Fastite, Clow Bell-Tite, or equivalent), or mechanical; unless otherwise called for on the proposal form. Pipe will be seal-coated in accordance with ANSI specification A 21.4 (AWWA C104) of latest revision.

17.2.2 All pipes shall have a minimum pressure rating as indicated on the following table, and corresponding minimum wall thickness unless otherwise approved or specified:

Pipe Sizes (inches)	Minimum Pressure Class (psi)
4 - 12	350
14 - 18	250
24 - 48	200

17.2.3 Joints shall be push-on unless otherwise specified. All fittings shall be standard push-on. Joints shall conform to AWWA C111.

17.2.4 The appropriate gaskets shall be provided for joints. Gaskets for flange joints shall be made of 1/8 inch thick cloth and reinforced rubber gaskets may be ring type of full face.

17.2.5 Interior lining: Ductile iron pipe and fittings shall be lined with polyethylene, calcium aluminates cement or a ceramic epoxy, as specified below:

17.2.5.1 Linings shall cover all exposed surfaces of pipe and fittings subject to contact with sewer liquid or gas.

17.2.5.2 The lining of the pipe barrel shall extend from spigot end through the socket to the edge of the gasket sealing area or recess for pipe using push-on gaskets and to the edge of the gasket seat for mechanical joints.

17.2.5.3 The lining shall also cover the exterior of the spigot end from the end of the pipe to beyond the gasket sealing area.

17.2.5.4 The lining in fittings shall cover the interior surfaces including socket areas. All linings shall be hermetically sealed at the ends.

17.2.6 Lining Materials: Ductile iron pipe shall be lined with one of the following lining systems or an approved equal:

17.2.6.1 Protector 401 Ceramic Epoxy lining as manufactured by Vulcan Chemical Technologies, Inc., with a nominal thickness of 40 mils. The lining shall be installed by an approved applicator in accordance with the manufacturer's specifications.

17.2.6.2 American Polybond Plus lining as manufactured by American Ductile Iron Pipe Company with a nominal thickness of 60 mils. The lining shall be installed at the pipe manufacturer's plant and in accordance with their specifications.

17.2.6.3 SewperCoat as manufactured by Lafarge Calcium Aluminates. The calcium aluminate lining shall be applied at a minimum thickness of 0.125 inches. Pipe lined with this lining shall be Ductile Iron H2 Sewer Safe pipe as manufactured by Griffin Pipe Products Company. The lining shall be installed at the manufacturer's plant and in accordance with their specifications.

17.2.7 Flexible Compression, Factory Fabricated Joints –Couplings and transition fittings must be a Shielded Sewer Mission Flex-Seal ARC or Harco fitting or approved equal.

17.2.8 Vitrified Clay Pipe – Vitrified clay pipe is not approved for construction of sanitary sewers.

17.2.9 Concrete Pipe – Concrete pipe is not approved for construction of sanitary sewers.

17.2.10 Cast Iron Soil Pipe – Cast iron soil pipe is not approved for construction of sanitary sewers.

17.2.11 SDR Polyvinyl Chloride (PVC) Pipe – PVC pipe and fittings must meet ANSI/ASTM D 3034-78 and shall be installed in accordance with ANSI/ASTM D 2321-74. Only Class I, II, and III embedment materials, as defined in paragraph 6 in figure 1 may be used in bedding, haunching and initial backfill. Minimum wall thickness for PVC pipe shall be SDR 35 for all sanitary sewer mains and all sanitary sewer laterals.

17.2.11.1 Flexible Compression, Factory Fabricated Joints –Couplings and transition fittings must be a Shielded Sewer Mission Flex-Seal ARC or Harco fitting or approved equal.

17.2.12 Centrifugally Cast Fiberglass Reinforced Polymer Mortar Pipe (CCFRPMP)

17.2.12.1 Pipe Material

17.2.12.1.1 Manufacturer shall use only polyester resin systems with a proven history of performance in the application of manufacturing pipe for gravity sewer.

17.2.12.1.2 The reinforcing glass fibers used to manufacture the components shall be of the highest quality E-glass filaments with binder and sizing compatible with impregnating resins.

17.2.12.1.3 Manufacturer shall use silica sand comprised of 98% silica with a maximum moisture content of 0.2%.

17.2.12.2 Construction of CCFRPMP

17.2.12.2.1 The pipe shall be manufactured by the centrifugal cast process.

17.2.12.2.2 The interior surface shall be manufactured using a resin with minimum 50% elongation in accordance with ASTM D638.

17.2.12.2.3 The exterior shall be comprised of a sand and resin which provides UV protection with no other special coatings.

17.2.12.2.4 The outside diameter shall be in accordance with ASTM D3262 for sizes 18-inch through 48-inch. For other diameters, dimensions will be in accordance with manufacturer's standard dimensions.

17.2.12.2.5 Pipe shall be supplied in nominal lengths of 20 feet.

17.2.12.2.6 Provide wall thickness in accordance with manufacturer's stated design thickness to provide a minimum pipe stiffness of SN 72 (nominal stiffness of 72 psi) in accordance with ASTM D2412 test method.

17.2.12.2.7 The 50-year strain corrosion value shall not be less than 0.9% as determined with ASTM D3681 and ASTM D3262.

17.2.12.3 Joints

17.2.12.3.1 The pipe shall be field connected with fiberglass sleeve couplings with elastomeric sealing gaskets. The joints must meet the performance requirements of ASTM D4161.

17.2.12.3.2 The manufacturer shall supply elastomeric gaskets in accordance with ASTM F477.

17.2.12.4 The manufacturer shall be HOBAS Pipe, USA or pre-approved equal.

17.2.13 Asbestos – Cement Pipe – Asbestos cement pipe is not approved for construction of sanitary sewers.

17.2.14 Steel Pipe (Casing) – Steel casing pipe for underground installation by dry bore and jacking shall be manufactured in accordance with ANSI Specification A 53 or latest revision. The steel casing pipe shall be Type S, Grade B, plain end beveled steel contained in USA Standard USAS B36 or latest revision. All steel casing pipe shall be furnished in 20 feet lengths, all joints welded. The minimum wall thickness shall be as follows:

Nominal Diameter (inches)	Nominal Thickness (inches)
Under 14	0.188
14 and 16	0.219
18	0.250
20	0.281
22	0.312
24	0.344
26	0.375
28 and 30	0.406
32	0.469
38, 40 and 42	0.500

17.2.14.1 Steel casing pipe shall have a minimum yield strength of 35,000 psi.

17.2.14.2 When casing pipe is installed without a protective coating and is not cathodically protected, the wall thickness shown above shall be increased to the next standard size.

17.2.15 Brick – Common brick shall conform to the specifications of the ASTM, Serial Designation C62, or latest revision.

17.2.15.1 Portland Cement concrete brick shall conform to the specifications of the ASTM, Serial Designation C55-71 for grade "N" brick, or latest revision.

17.2.15.2 Brick for manholes shall be grade "MS" or equal and shall conform to ASTM C32.

17.2.16 Manhole Ring and Cover: All manhole ring and covers shall have bearing surfaces ground so that the covers will fit solidly in all positions and insure a tight fit. This specification is applicable for ductile iron and cast iron castings. Ductile iron castings shall be manufactured from iron conforming to ASTM A536 grade 80-55-06 as noted in section 3.2 of AASHTO M306-04. Cast iron castings shall be manufactured from iron conforming to ASTM A48 Class 35B as noted in section 3.1 of AASHTO M306-04. All manhole ring and covers shall be marked "City of Columbia" and "Sanitary Sewer". Only heavy duty manhole ring and covers are to be used, and this apply for both traveled and non-traveled way.

17.2.16.1 Watertight Manhole Frame and Cover: Where watertight manhole and covers are required, castings for covers shall be as follows:

- East Jordan Iron Works, Inc. (EIJW) model # 1033 HingeCo
- Neenah Foundry model "Lift Mate"
- US Foundry model #750-KI.

17.2.16.2 Standard Frame and Cover: Standard manhole and covers shall be as follows:

- East Jordan Iron Works, Inc. (EJIW) model # 1045 frame and 1040A cover
- Neenah Foundry R-1642 ring & cover
- US Foundry model # 755-NC.

17.2.16.3 Additional castings will be reviewed for approval upon request.

17.2.16.4 Steps: Steps shall be made of Polypropylene and approximately 12" wide. Steps shall be as manufactured by M.A. Industries model #PSI-PF or approved equal.

17.2.16.5 Cleanouts

17.2.16.5.1 Cleanouts shall be placed on all sewer service laterals.

17.2.16.5.2 The bodies of clean out ferrules shall conform in thickness to that required for pipe and fittings of the same material. The cleanout plug shall be of heavy brass or PVC, not less than one-eighth (1/8) of an inch thick and shall be provided with a recessed socket for removal. Both ferrule and plug shall have ANSI Standard tapered threads.

17.2.16.5.3 Clean-outs shall be installed at the property line, right-of-way, or edge of easement for each service connection. Cleanouts shall also be installed at every change in direction of the service line.

17.2.16.5.4 Cleanout Box: Cleanout boxes will be marked "Sewer Cleanout" and shall be as follows:

- East Jordan Iron Works, Inc. (EJIW) model #V8502
- US Foundry model # 7637-VA.

17.2.17 Drop Manholes – Where the free drop in manholes exceeds two feet, measured from the invert of the inlet sewer to the invert of the outlet sewer, the Contractor shall construct drop manholes in accordance with detailed plans. Materials and workmanship shall be in accordance with the General Specifications.

17.2.18 Precast Concrete Manhole Sections – Precast concrete sections, if used, shall conform to the ASTM Tentative Specifications for Precast Reinforced Concrete Manhole Risers and Tops, Designation C478, with the following exceptions and additional requirements. All precast concrete sections shall be lined as specified hereinbefore for concrete pipe.

17.2.18.1 Type II cement shall be used except as otherwise approved.

17.2.18.2 Manhole steps are specified under Item 2.9.4. Steps shall be cast into the section as it is made.

17.2.18.3 Sections shall be steam cured and shall not be shipped until at least five days after having been cast.

17.2.18.4 Minimum wall thickness shall be five (5) inches.

17.2.18.5 Acceptance of the sections will be on the basis of material tests and inspection of the completed product.

17.2.18.6 Domes shall be of the eccentric type.

17.2.18.7 Joints in riser sections shall be gasket type conforming to ASTM Designation C361 series, or others approved by the Engineer.

17.2.18.8 No more than two lift holes may be cast or drilled in each section.

17.2.18.9 The date of manufacture and the name or trademark of manufacturer shall be clearly marked on the inside of the barrel.

17.2.19 Portland Cement Concrete – Portland cement concrete for structures shall conform to Section 701 of the SCDOT Standard Specifications for Highway Construction, latest edition.

17.2.19.1 The 28-day compressive strength of concrete shall not be less than 3000 psi which shall be demonstrated by standard compressive tests. Each test shall consist of duplicate cylinders and not less than one test shall be made for each 50 cubic yards. One cylinder of each pair shall be tested after seven days and shall have a compressive strength of not less than 2000 psi.

17.2.19.2 Concrete shall contain not less than six sacks of cement per cubic yard and not more than six gallons of water per sack of cement, including water contained in aggregate.

17.2.20 Concrete and Masonry Mortar – This section includes all concrete work required, of every description, shown or specified, including pavements, bedding concrete, thrust blocks, etc.

17.2.20.1 All materials incorporated shall conform to the SCDOT Standard Specifications for Highway Construction, latest edition.

17.2.21 Reinforcing Steel – Reinforcing steel shall be of new billet steel intermediate grade made by the open hearth process, conforming to the requirements of the "Standard Specifications for Billet Steel Concrete Reinforcement Bars", Serial Designation C15-33 of the ASTM Designation A615-68. Bars must be deformed in rolling, and the design of the deformation shall be in accordance with ASTM designation A615-68. In addition to the reinforcing indicated on the plans, the Contractor shall furnish all necessary support bars, tie bars, etc., required for properly supporting and spacing the bars in the forms. The reinforcement will be subject to field inspection for rust, shape and dimensions.

17.2.21.1 Wire mesh used as reinforcement shall be of the size and spacing shown on the plans. The wire mesh shall comply with ASTM-A-185.

17.2.22 Fencing – See Standard Fencing Specifications.

17.2.23 Paving Materials- Subbase, base and surfacing materials used for replacing existing pavements or constructing new pavements shall conform to the SCDOT Standard Specifications for Highway Construction, latest edition.

17.2.24 Portland Cement Mortar – Portland Cement Mortar shall consist of Portland cement, fine aggregate and water.

17.2.24.1 Ingredients – All materials for mortar shall conform to requirements of the SCDOT Standard Specifications where applicable and the following specifications:

17.2.24.1.1 Portland Cement – ASTM Designation C150, Section 501, Concrete Materials.

17.2.24.1.2 Sand – 501.04 Fine Aggregate; Section 501, Concrete Materials.

17.2.24.1.3 Water – 501.06 Water; Section 501, Concrete Materials.

17.2.24.2 All equipment, tools and machinery used in mixing and handling mortar shall be approved by the Engineer.

17.2.24.3 Composition – The proportions of Portland cement, fine aggregate and water shall be such as to produce a plastic mortar. The workability shall be consistent with the type of work for which it is used in order to secure the best results.

17.2.24.3.1 The mortar as specified for the several types of work, shall be proportioned one part cement and three parts by volume fine aggregate.

17.2.24.3.2 Proportioning of batches shall be by volume unless otherwise shown on the plans or specified in the Special Provisions. One sack of cement weighing ninety-four

(94) pounds shall be considered on (1) cubic foot. Correction for bulking of the fine aggregate shall be made as directed by the Engineer.

17.2.24.4 Admixture

17.2.24.4.1 Lime – Lime which has been thoroughly air slaked may be added, up to ten (10) percent of the cement content of the mix to increase the workability of the mortar, upon approval of or direction of the Engineer. Lime shall conform to ASTM Specifications, Designation C 141.

17.2.24.4.2 Commercial Admixtures – Commercial admixtures to increase the workability of mortar or concrete will not be used unless specifically approved in writing by the Engineer.

17.2.25 All other materials, not herein specified shall conform to applicable sections of SCDOT Standard Specifications for Highway Construction, latest edition.

17.3 CONSTRUCTION METHODS

17.3.1 Order of Construction – The construction of all sewers shall begin at the low point in the line in every case working toward the high point. Each section of sewer pipe shall be specified to be laid to the appropriate line and grade, as designed, working in the upstream direction with the bell end laid upgrade.

17.3.2 Excavation in Advance of Construction – The amount of trench excavated approximately to grade shall not exceed one hundred fifty (150) feet, and no trench excavation whatever shall be made farther than three hundred (300) feet in advance of sewer construction, unless specifically authorized by the Engineer.

17.3.3 Use of Explosives – Should the Contractor elect to use explosives to loosen rock or for any other purposes in the prosecution of the work, he shall obtain the required permits and the written permission of the Engineer. The City Fire Chief and Police Chief shall be notified. If construction is outside the City Limits, the Contractor shall be responsible for determining whether a County permit is required and for obtaining any permit so required. The Contractor shall be responsible for and shall make good any damage caused by blasting or accidental explosions. All necessary precautions shall be taken by the Contractor as required by Federal and State laws, County regulations, if applicable, City regulations, the Standard Fire Prevention Code and O.S.H.A. Rules and Regulations. (See General Specifications.)

17.3.3.1 The hours of blasting will be fixed by the Engineer. Any damage caused by blasting shall be repaired by the Contractor at his expense. The Contractor's methods and procedures in blasting shall conform to Federal and State laws, County regulations, if applicable, City regulations, the Standard Fire Prevention Code and O.S.H.A. Rules and Regulations. (See General Specifications.)

17.3.4 Delivery of Materials – Materials delivery shall be so scheduled by the Contractor to provide the least interference and inconvenience to the public.

17.3.5 Connections to Other Sewers or to Appurtenances – The connecting of sewers or sewer appurtenances to other sewers or to sewer appurtenances shall be made in accordance with the plans, or under the direction of the Engineer. The work shall be done in a workmanlike manner in such a way as to prevent damage to any of the structures involved. No sewer shall project beyond the inside wall line of other sewer pipe, or of sewer appurtenances unless otherwise shown on the plans.

17.3.5.1 Stoppers or Bulkheads – Dead ends of all sewers, wyes, etc. shall be closed with approved stoppers securely cemented in place. When shown on the plans or required by the Engineer, such openings shall be tightly walled up with brick masonry or concrete. Tight fitting stoppers or bulkheads shall be securely placed in or across the end of all sanitary sewer lines when construction is stopped at the end of each day's work or for any other cause. When work is stopped temporarily on sanitary sewers, the end of the pipe shall be closed to prevent trash or debris from entering the pipe. Such stoppers need not be water tight.

17.3.6 Sewer Grades – The grade line shown on the plans is the elevation of the invert or flow line of the sewer. The grade line shall be established in the trench by the use of batterboards set at grade stakes not farther than fifty (50) feet apart. Not less than three (3) batterboards shall be maintained in correct position continuously during the construction of the sewer. Batterboards shall be of good, straight, sound material, fastened to substantial stakes or uprights. Batterboards ten (10) feet or less in length shall not be smaller than 1" x 4", and when longer than ten (10) feet shall not be smaller than 1" x 6" or 2" x 4". Stakes shall not be smaller than 2" x 4". Steel stakes may be used when approved by the Engineer. Suitable fine cord or wire, shall be stretched tightly between batterboards over the exact centerline of the sewer. A graduated pole or rod shall be provided for measuring from the cord stretched between batterboards to the bottom of the trench while the trench is being prepared, and to the sewer invert while the sewer is being placed.

17.3.6.1 Laser Level – The use of a laser level to establish sewer grade and alignment is permitted as an alternate to the use of batterboards, at the contractor's option.

17.3.7 Excavation and Backfill – Excavation and backfill shall include all excavation, backfilling, compacting, disposal of surplus material, restorations of all disturbed surfaces, and all other work incidental to the construction of trenches, including any additional excavation which may be required for manholes or other structures forming a part of the pipe line.

17.3.7.1 Surface Removal – along the proposed pipe lines as indicated on the plans, the Contractor shall remove the surface materials only to such widths as will permit a trench to be excavated which will afford sufficient room for proper efficiency and proper construction. Where sidewalks, driveways, pavements and curb and gutter are encountered, care shall be taken to protect such against fracture or disturbance beyond reasonable working limits. In areas specified on the plans, the top twelve (12) inches shall be piled separately and preserved so that it may be restored after the remainder of the backfill is replaced.

17.3.7.2 Excavation by Hand or Machine – Where working space will permit, trenches may be excavated by machine, provided that by so doing, public and private

improvements will not be subjected to an unreasonable amount of damage, otherwise hand excavation shall be employed.

17.3.7.3 Width of Excavation – The bottom width of the trench at and below the top of the pipe, and inside any sheeting and bracing used, shall not be less than the widths shown in the following tables:

17.3.7.3.1 When construction is under an unimproved surface the following table shows the minimum trench widths:

Pipe Size	Width	Paper Size	Width	Paper Size	Width
6”	2’6’	27”	4’3”	66”	9’1”
8”	2’6”	30”	4’7”	72”	9’8”
10”	2’6”	33”	5’4”	78”	10’3”
12”	2’8”	36”	5’8”	84”	10’10”
15”	2’10”	42”	6’3”	90”	11’5”
18”	3’2”	48”	6’10”	96”	12’0”
21”	3’8”	54”	7’11”	102”	12’7”
24”	4’0”	60”	8’6”	108”	13’2”

17.3.7.3.2 When construction is under an improved surface, the following table shows the minimum trench widths:

Pipe Size	Width	Paper Size	Width	Paper Size	Width
6”	3’0”	27”	4’9”	66”	9’7”
8”	3’0”	30”	5’0”	72”	10’2”
10”	3’0”	33”	5’9”	78”	10’9”
12”	3’0”	36”	6’1”	84”	11’4”
15”	3’0”	42”	6’9”	90”	11’7”
18”	3’5”	48”	7’4”	96”	12’6”
21”	3’9”	54”	7’11”	102”	13’1”
24”	4’6”	60”	9’0”	108”	13’8”

17.3.7.3.3 The strength or class of pipe shall be as indicated on the plans or Special Provisions.

17.3.7.3.4 Trench sheeting and bracing or a trench shield shall be used when required by the rules and regulations of O.S.H.A. The bottom of the trench excavation shall conform to the details shown on the plan.

17.3.7.4 Excavation Below Grade – Where the excavation is carried beyond or below the lines and grades given by the Engineer, the Contractor shall, at his expense, refill all such excavated space with suitable material as approved by the Engineer.

17.3.7.5 Rock Excavation - Rock excavation shall consist of igneous, metamorphic and sedimentary rock, concrete or masonry which cannot be excavated without blasting or the use of rippers, hoe-rams, or pavement breakers and all boulders or other detached stones each having a volume of ½ cubic yard or more as determined by physical or visual measurement. If there is not a bid item listed in the proposal form for this excavation, it shall be measured and paid for as Unclassified Excavation.

17.3.7.5.1 Rock shall be excavated to a depth of 6 inches below the bottom of the pipe subgrade elevation as shown on the plans or as directed by the Engineer. The Contractor shall backfill to the subgrade elevation with material approved by the Engineer. Such material shall be properly compacted and shaped into the required elevation and cross-section.

17.3.7.5.2 Before payment is allowed for rock excavation, the Contractor shall be required to demonstrate that the material cannot be removed "by hand pick" or by power operated excavator or shovel. No payment will be made for Rock Excavation unless the Engineer determines that the material meets the above criteria, and gives written approval for payment prior to excavation.

17.3.7.5.3 Should the Contractor elect to use explosives to loosen rock or any other purposes in the prosecution of the work, he shall obtain the required permits and written permission of the Engineer. The City Fire Chief and Police Chief shall be notified. If construction is outside the City limits, the Contractor shall be responsible for determining whether a County permit is required and for obtaining any permit so required. The Contractor's methods and procedures in the transportation, handling, storage and use of explosives shall comply with requirements of Federal and State laws, County regulations, if applicable, City regulations, the Standard Fire Prevention Code and O.S.H.A. Rules and Regulations. The Contractor shall be responsible for and shall repair at his own expense any damage caused by blasting or accidental explosions.

17.3.7.5.4 Blasting for excavation will be permitted only after securing the approval of the Engineer and only when proper precautions are taken for the protection of persons and property. The hours of blasting will be fixed by the Engineer. The Contractor's methods and procedures in blasting shall conform to requirements of laws and regulations listed in item 3.7.5.

17.3.7.6 Subsurface Exploration – All information available to the City, if any, on subsurface conditions will be made available for examination by prospective bidders. However, it is understood and agreed that the City shall in no way be held responsible for interpretation of this information, its accuracy or its thoroughness. Prospective bidders shall made such subsurface explorations as they believe necessary to verify and supplement information received from the City.

17.3.7.7 Exploratory Excavation – Whenever, in the opinion of the Engineer, it is necessary to explore and excavate to determine the best line and grade for construction of the proposed pipe line, the Contractor shall make explorations and excavations for such purposes.

17.3.7.8 Braced and Sheeted Trenches – Open-cut trenches shall be sheeted and braced or otherwise protected as required by any governing Federal or State laws and municipal ordinances, and as may be necessary to protect life, property, or the work. In any event, the minimum protection shall conform to the recommendations in O.S.H.A. Safety and Health Standards for Construction. A sand box or trench shield may be used in lieu of sheeting when permitted by O.S.H.A. and approved by the Engineer. When close-sheeting is used, it shall be

so driven as to prevent adjacent soil from entering the trench either below or through such sheeting.

17.3.7.8.1 Where sheeting and bracing are used, the trench width shall be increased as directed by the Engineer. The Engineer may order the sheeting driven to the full depth of the trench or to such additional depth as may be required for the protection of the work. Where soil in the lower limits of the trench has the stability to meet the O.S.H.A. standards, the Engineer at his discretion may permit the Contractor to stop the driving of sheeting at such designated elevation above the trench bottom. The granting of permission by the Engineer, however, shall not relieve the Contractor in any degree from his full responsibility under the contract. Sheeting and bracing which have been ordered left in place shall be cut off at the elevation ordered by the Engineer. Trench bracing, except that ordered left in place, may be removed when the backfilling has reached the respective levels of such bracing. Sheeting, except that ordered left in place, may be removed after the backfilling has been completed or has been brought to an elevation that permits its safe removal.

17.3.7.9 Trenches With Sloping Sides, Limited – The Contractor may, at his option, where working conditions and rights-of-way permit (as determined by the Engineer), excavate pipe line trenches with sloping sides, but with the following limitations:

17.3.7.9.1 In general, only braced and vertical trenches will be permitted in traveled streets, alleys or narrow easements.

17.3.7.9.2 Where trenches with sloping sides are permitted, the slopes shall not extend below the top of the sewer. Trench excavations below this point shall be made with vertical sides, with widths meeting those specified hereinbefore for the various sizes of pipe.

17.3.7.10 Short Tunnels – In some instances, the proximity of trees, fire hydrants, sidewalks and other obstructions may be a hindrance to open-cut excavation. In such cases, the Contractor shall excavate by means of short tunnels in order to protect such obstructions against damage. Such short tunnel work shall be considered incidental to the construction of the pipe line and shall not be grounds for extra payment or payment for tunnel work. Where such obstructions are shown on the plan, payment will be made at the contract unit price or as extra work in accordance with Item 5.0.

17.3.7.11 Piling Excavated Material – All excavated material shall be piled in a manner that will not endanger the work and that will avoid obstructing sidewalks and driveways. Fire hydrants under pressure, valve pit covers, valve boxes, curb stop boxes, or other utility controls shall be left unobstructed and accessible. Gutters shall be kept clear or other satisfactory provisions made for street drainage. Natural watercourses shall not be obstructed.

17.3.7.12 Removal of Water – The Contractor shall at all times during construction provide and maintain ample means and devices with which to promptly remove and properly dispose of all water entering and excavations or other parts of the work until all work to be performed therein has been completed. No sanitary sewer shall be used for disposal of trench water, unless specifically approved by the

Engineer and then only if the trench water does not ultimately arrive at existing pumping or sewage treatment facilities.

17.3.7.13 Structure Protection – Temporary support, adequate protection and maintenance of all underground and surface structures, drains, sewers and other obstructions encountered in the progress of the work shall be furnished by the Contractor at his expense and under the direction of the Engineer. The structures which may have been disturbed shall be restored upon completion of the work.

17.3.7.14 Deviations Occasioned by Other Structures or Utilities – Wherever obstructions are encountered during construction that require alteration of a plan, the Engineer shall change the plans and order a deviation from the line and grade or arrange with the owners of the structures for the removal, relocation or reconstruction of the obstructions. Where gas, water, telephone, electrical, hot water, steam or other existing utilities are an impediment to the alignment of the proposed pipe line, the Engineer shall order a change in grade or alignment or shall arrange with the owners of the utilities for their removal. If a change in line or grade of a sanitary sewer is necessary, the Engineer will order the addition of any manholes needed. Cost of removal, modification and/or replacement of existing structures or utilities shall be borne by the City.

17.3.7.15 Protection of Utilities and Structures – The Contractor shall proceed with caution in the excavation and preparation of the trench so that the exact location of underground structures may be determined. Prior to proceeding with trench excavation the Contractor shall contact all utility companies in the area to aid in locating their underground services.

17.3.7.15.1 The Contractor shall take all reasonable precautions against damage to existing utilities. However, in the event of a break in an existing water main, gas main, sewer or underground cable, he shall immediately notify the responsible official of the organization operating the utility interrupted. The Contractor shall lend all possible assistance in restoring services and shall assume all cost, charges or claims connected with the interruption and repair of such services if the location of said utility was marked by the owner thereof prior to excavation.

17.3.7.15.2 Contractor shall protect all structures from damage during construction.

17.3.7.16 Backfill – All sanitary sewer pipe and services shall be bedded on a minimum of 4” of gravel and backfilled with gravel up to the spring line.

17.3.7.16.1 Backfill material above the granular cradle to a point twelve (12) inches above the top of the pipe shall be placed in layers of six (6) inches thickness, loose measure, and each in such manner as not to disturb or injure the pipe. The balance of the backfill material shall be placed in uniform layers of twelve (12) inches thickness, loose measure, and each layer shall be compacted by ramming or tamping with tools approved by the Engineer. All compaction shall not be less than 95% standard proctor, for the soil.

17.3.7.16.2 Where called for on the plans, those areas where sewers are crossing open areas where early settlement is not critical, backfill from 12” from the top of the pipe to the surface, shall be made by any acceptable method which will not dislodge or

damage the pipe or cause bridging action in the trench. Only selected excavated material free from clods or stones shall be used in backfilling up to twelve (12) inches above the top of the pipe. Water-soaking or other methods of trench settlement will not be required in this case. Excess material shall be neatly rounded over the top of the trench as directed by the Engineer to allow reshaping of the surface to level out any uneven settlement that may occur.

17.3.7.17 Selected Granular Backfill – Where called for on the plans, material conforming to this specification for selected granular backfill shall be laced and compacted in those locations shown on the plans. Where sewers, water mains, or other pipe conduits are constructed under permanent type pavements, driveways or sidewalks, selected granular backfill shall be used to fill the trench to the bottom of the permanent type surface to be reconstructed and shall be compacted by either water jetting or mechanical methods before the permanent surface is constructed.

17.3.7.17.1 Materials for selected granular backfill shall consist of sand, stone sand, crushed stone, pit run or crushed gravel, or crushed boiler slag well graded within the following limits. Selected granular backfill shall be reasonably free from an excess of soft and unsound particles and other objectionable matter.

17.3.7.17.1.1 SELECTED GRANUALR BACKFILL

SIEVE SIZE			PERCENT PASSING					
TYPE	1-1/2”	1”	½”	#4	#8	#16	#100	#200
A	100	90-100	60-100	40-80	25-60	20-45		0-15
B		100	60-95	40-60		15-45		5-15
C				84-100			0-40	0-10
D			100	94-100		45-85	0-10	

17.3.7.17.1.2 Granular materials from local deposits, graded reasonably close to the limits specified above, and approved by the Engineer, may be used for selected granular backfill.

17.3.7.17.2 At the time of use, the selected granular backfill shall be free of frozen lumps and foreign materials that may have become mixed with it during handling.

17.3.7.18 Granular Cradle – Granular cradle shall be required only where indicated on the drawings or special provisions, or where ordered by the Engineer. Material fro granular cradle shall be stone screenings, crushed stone, pit run gravel, washed gravel, crushed boiler slag or other granular materials approved by the Engineer. Granular cradle shall be well graded within the limits stated below and shall be free from excess of soft or unsound particles or other objectionable matter. The type of granular cradle to be used in specific location will be designated by the Engineer.

17.3.7.18.1 For reasonably good non-granular foundation conditions, Type A, or Type C granular cradle will be designated. Where, in the opinion of the Engineer, the foundation conditions are not suitable for use of one of the above types of granular cradle then Type B granular cradle or concrete cradle may be used. The actual selection is to be made by the Engineer. Granular cradle shall be allowed for separate payment only in the locations where the use of these items is specified or ordered by the Engineer. A change in type of cradle material shall not be made unless a minimum of two (2) cubic yards of material is allowed for payment.

17.3.7.18.1.1 GRANULAR CRADLE GRADATIONS

Sieve Size				Percent Passing			
TYPE	1-1/2”	1”	½”	#4	#8	#16	#200
A	100	90-100	60-100	40-80	25-60	20-45	0-15
B	100	60-95			10-30		0-5
C	100	60-95	40-60		15-45		5-15

17.3.7.18.1.2 Granular materials, from local deposits, graded reasonably close to the limits specified above and approved by the Engineer for use as granular cradle may be used.

17.3.7.18.2 Where the natural foundation soil, on which sewer pipes are to be bedded, consists of material suitable in its natural state for shaping and bedding a sewer, no granular cradle will be required. Where granular cradle is not required, the trench ahead of the pipe shall not be excavated below a plane one-twelfth (1/12) the inside diameter of the pipe above the flow line of the sewer. The pipelayer shall excavate the remainder of the trench to conform to the outside of the bottom of the pipe in order that the barrel of the pipe will have a bearing of not less than one-fourth (1/4) of its circumference and for not less than three-fourths (3/4) of its length. Bell holes shall be dug for bell and socket around the pipe from the outside. Under no condition shall they be so shallow that the pipe will be supported by the bell. After the joint is made, the bell hole shall be carefully filled with sand, fine earth or clay without tamping.

17.3.7.19 Unsuitable Soil – When soil conditions require the removal of unsuitable materials below the depth of the bedding shown on the plan, the Contractor shall replace the materials removed with granular cradle of the grade approved by the Engineer.

17.3.7.20 Concrete Cradle – Where subgrade conditions, in the opinion of the Engineer, warrant extra precautions for the bedding of pipe the Engineer may order the construction of a concrete cradle in conformance with the size and dimensions indicated on standard detail SSC-4. All concrete used in concrete cradle shall have a minimum compressive strength of twenty-five hundred (2,500) psi at twenty-eight (28) days.

17.3.7.21 Compacting Backfill – When called for on the plans, trench backfill shall be compacted by jetting the water-soaking in the manner described below. The trench compaction shall be started at the point of lowest elevation of the trench and worked up along the trench. Jetting and water-soaking shall not begin until the trench has been backfilled to within six (6) inches of the finished surface.

17.3.7.21.1 Jet Holes – The holes through which water is injected into the backfill shall be centered over the trench backfill and at longitudinal intervals of not more than six (6) feet. Additional holes shall be provided if deemed necessary by the Engineer to secure adequate settlement. All holes shall be jetted and shall be carried to a point one (1) foot above the pipe. Drilling the holes by means of augers or other mechanical means will not be permitted. Care shall be taken in jetting so as to prevent direct contact with, or other disturbances of the pipe.

17.3.7.21.2 Water Soaking – Water required for jetting and water soaking shall be provided as set forth in Special Provisions. The water shall be injected at a pressure and rate just sufficient to sink the holes at a moderate rate. After a hole has been jetted to the required depth, the water shall continue to be injected until it begins to overflow the surface. An approved soil auger shall be used for boring test holes. As soon as the jetting and water soaking has been completed, all holes shall be filled with soil and compacted. Surface depressions resulting from backfill substance caused by jetting and water soaking shall be filled and recompacted by tamping or rolling to the satisfaction of the Engineer.

17.3.7.22 Unsuitable Backfill Material – Where there is a deficiency of suitable backfill material, due to a rejection of part or all of the excavated material as unsatisfactory for backfill purposes, and other bedding materials are not specified, the Contractor shall furnish satisfactory backfill material wasted from trench excavation in other locations or from other sources furnished by the Contractor. Backfill furnished and disposal of unsatisfactory material under these circumstances shall not be paid for directly, the cost of which is to be included in other bid items.

17.3.8 Tunnel – Where shown on the plans or where specifically authorized by the Engineer, pipe lines shall be constructed in tunnels. This work will be done in accordance with requirements of any permits obtained by the City from railroads or state or county highway departments, or in accordance with the following paragraphs.

17.3.8.1 Carrier Pipe materials shall be shown on the plans, in these specifications or as described in the special provisions.

17.3.8.2 Requirements for excavation and laying and for joints shall be those applicable for the type of pipe line involved, unless otherwise specified.

17.3.8.3 The tunnel shall be only of sufficient width and height to provide free working space. The sides and roof of the tunnel shall be braced sufficiently to support the external loads and to prevent caving, bulging, and settlement of the earth.

17.3.8.4 The Contractor shall backfill all tunnels with well compacted sand, fine gravel or stone screenings as rapidly as the conditions permit.

17.3.8.5 The backfill material shall be deposited in the tunnel in such a manner as not to injure or disturb the pipe. The filling of the tunnel shall be carried on simultaneously on both sides of the pipe in such a manner that injurious side pressures do not occur. Special care shall be taken to compact the backfill under the haunches of the pipe. The remainder of the tunnel, or such portion of the remainder as may be possible, shall then be backfilled by one of the following methods, at the option of the Contractor, if in the opinion of the Engineer, the method is practicable.

17.3.8.5.1 The material shall be deposited in uniform layers not to exceed twelve (12) inches thick (loose measure) and such layer either inundated or deposited in water.

17.3.8.5.2 The tunnel shall be backfilled with loose material or only partly backfilled at a time, if necessary, and settlement secured in either case by introducing water through holes jetted into the material to a point approximately two (2) feet above the top of the pipe.

17.3.8.5.3 If neither of the above methods is practicable or can be used for only a portion of the backfill, the remainder of the tunnel shall be completely backfilled with material carefully deposited in uniform layers and each layer compacted by ramming or tamping with tools approved by the Engineer.

17.3.8.6 When sheeting and bracing have been used, sufficient bracing shall be left across the trench as the backfilling progresses to hold the sides and top firmly in place without caving or settlement before the backfilling material shall be filled in a manner meeting the approval of the Engineer.

17.3.8.7 Any depressions which may develop within the area involved in the construction operations due to settlement of the backfilling material shall be filed in a manner meeting the approval of the Engineer.

17.3.8.8 Use of Casing Pipe – The Contractor may, subject ot the approval of the Engineer, use metal casing pipe as a tunnel liner in place of timber shoring. The diameter, gauge and type of such pipe, method of placing and method of installing carrier pipe within it shall be subject to the approval of the Engineer. The entire void space between tunnel liners and the pipe shall be filled with compacted sand or other approved material if such method of construction is used.

17.3.8.9 Jacking or Boring of Pipe – The Contractor may, subject to the approval of the Engineer, use special cast iron pipe bored into position with or without tunnel liners, for tunneled sections of pipe. In such cases all conditions of performance of the work shall be subject to the approval for the Engineer.

17.3.8.10 Restoration of Surfaces – Restoration of surfaces shall include the removal of the existing surface, the disposal of surplus material, and the construction of new surfaces as indicated on the plans or special provisions. The type of surface restoration required shall be shown on the plans or described in the special provisions.

17.3.9 Temporary Surface Over Trench – Wherever conduits are constructed under traveled roadways, driveways, sidewalks, or other traveled surfaces, a temporary

surface may be placed over the top of the trench as soon as possible after compaction, when approved by the Engineer. The temporary surface shall consist of a minimum of six (6) inches of coarse aggregate conforming to the current specifications of the SCDOT.

17.3.9.1 The top of the temporary surface shall be smooth and meet the grade of the adjacent undisturbed surface. The temporary surface shall be maintained at the Contractor's expense until final restoration of the street surface is completed as specified. No permanent restoration of street surface shall be initiated until authorized by the Engineer. The temporary surfacing shall be required over the entire width of the trench.

17.3.9.2 Where ordered by the Engineer, dust control over temporary surfaces shall be accomplished by the Contractor.

17.3.9.3 Payment for temporary surface over trench will not be paid for directly, the cost to be included in the items Remove and Replace Pavement, Remove and Replace Driveways and Remove and Replace Sidewalks.

17.3.10 Removal of Pavement, Sidewalk, Driveway and Curb – Wherever the pipe is located along or across an improved surface, the width of the trench shall be held as nearly as possible to the width specified. Where brick or concrete pavement, sidewalk, driveway or curbing is cut, the width of the cut will exceed the actual width of the top of the trench, in accordance with Standard Detail SSC-5. Exposed surfaces of Portland cement or asphaltic concrete shall be cut with a pavement saw before breaking. Care shall be taken in cutting to insure that a straight joint is sawed.

17.3.11 Replacement of Permanent Type Pavement, Sidewalks, Driveways, Curbs, Gutters and Structures – The Contractor shall restore (unless otherwise specified or ordered by the Engineer) all permanent type pavements, sidewalks, driveways, curbs, gutters, shrubbery, fences, poles and other property and surface structures removed or disturbed during or as a result of construction operations to a condition which is equal in appearance and quality to the condition that existed before the work began. The surface of all improvements shall be constructed of the same material and match in appearance the surface of the improvement which was removed. All work shall be in accordance with applicable details shown on the plans and in these specifications. Any sidewalk or driveway crossing a sidewalk is removed, it shall be replaced in accordance with latest version of ADA requirements.

17.3.11.1 Materials shall conform to SCDOT Standard Specifications for Highway Construction, latest edition.

17.3.12 Sewer Pipe Laying – Laying of sewer pipe shall be accomplished to line and grade in the trench only after it has been dewatered and the foundation and/or bedding has been prepared. Mud, silt, gravel and other foreign material shall be kept out of the pipe and off the jointing surfaces.

17.3.12.1 All pipe laid shall be retained in position so as to maintain alignment and joint closure until sufficient backfill has been completed to adequately hold the pipe in

place. All pipe shall be laid to conform to the prescribed line and grade shown on the plans, within the limits that follow. At least three batterboards shall be maintained in position during all pipe laying operations, unless a laser beam is used.

17.3.12.2 Variance from established line and grade shall not be greater than one thirty-second (1/32) of an inch, per inch of pipe diameter and not to exceed one-half (1/2) inch provided that any such variation does not result in a level or reverse sloping invert; provided also, that variation in the invert elevation between adjoining ends of pipe, due to non-concentricity of joining surface and pipe interior surfaces, does not exceed one sixty-fourth (1/64) inch per inch of pipe diameter, or one-half (1/2) inch maximum.

17.3.12.3 The sewer pipe, unless otherwise approved by the Engineer, shall be laid up grade from point of connection on the existing sewer or from a designated starting point. The sewer pipe shall be installed with the bell end forward or upgrade, unless approved otherwise. When pipe laying is not in progress the forward end of the pipe shall be kept tightly closed with an approved temporary plug.

17.3.13 Sewer Pipe and Water Main Separation – Sanitary sewers, house sewers or storm drains that are laid in the vicinity of pipe lines designated to carry potable water shall meet the following conditions:

17.3.13.1 Parallel Installation – Sewers and Water Mains – Normal Conditions – Any sanitary sewer, storm sewer or sewer manhole shall be located at least ten feet horizontally from water mains, whenever possible; the distance shall be measured from edge to edge.

17.3.13.2 Unusual Conditions – When local conditions prevent a horizontal separation of ten feet, a storm or sanitary sewer may be laid closer to a water main provided that:

17.3.13.2.1 The bottom of the water main is at least 18 inches above the top of the sewer.

17.3.13.2.2 Where this vertical separation cannot be obtained, the sewer shall be constructed of materials and with joints that are equivalent to water main standards of construction.

17.3.13.3 Crossing – Sewers and Water Mains – Normal Conditions – Water mains crossing house sewers, storm sewers or sanitary sewers shall be laid to provide a separation of at least 18 inches between the bottom of the water main and the top of the sewer.

17.3.13.4 Unusual Conditions – When local conditions prevent a vertical separation of 18”, the sanitary sewer shall be constructed of cast iron pipe meeting water main specifications.

17.3.14 Sewer Line Connections – No existing sewer shall be connected to a sanitary sewer unless specifically authorized in each instance by the Engineer. Storm drains and drain tiles shall not be connected to a sanitary sewer.

17.3.15 Service Wyes and Risers – Where the depth of the sewer invert is greater than twelve (12) feet below the surface of the ground, a service riser shall be constructed to an elevation as shown in the plans or as directed by the Engineer.

17.3.15.1 The service riser shall be constructed with a minimum six (6) inch wye branch as shown on the standard detail No.SSC-7, or as shown in the plans.

17.3.15.2 The riser pipe shall extend to the proper elevation and shall terminate with a manufactured plug.

17.3.15.3 Extreme care shall be taken in backfilling around risers. Where the excavated material is not suitable for this purpose in the opinion of the Engineer, granular material shall be placed around the riser.

17.3.16 Sewer Manholes – Sewer manholes shall be constructed so that no water pipe or other conduit is in contact with or enclosed by any part of a sewer or sewer manhole.

17.3.16.1 Manholes shall be leak-tight and may be constructed of precast units, Portland cement concrete brick or cast-in-place concrete, all in accordance with plans and these specifications.

17.3.16.2 Strength – All concrete used in manhole construction shall have a minimum compressive strength of thirty-five hundred (3,500) psi at twenty-eight (28) days. Strength determination shall be in accordance with ASTM C39, unless otherwise approved by the Engineer.

17.3.16.3 Steps – Manhole steps shall be furnished and installed as shown on the plans.

17.3.16.4 Cast-in-Place Bases – Unless otherwise specified, cast-in-place bases shall be at least six (6) inches in thickness and shall extend at least six (6) inches radially outside of the outside dimension of the manhole section.

17.3.16.5 Brick Manholes – Brick manholes are not approved for sanitary sewer construction.

17.3.16.6 Precast Manholes – Precast manholes shall be constructed with a cast-in-place base as specified.

17.3.16.6.1 Precast base sections are not approved.

17.3.16.6.2 All lift holes in precast elements for sanitary sewer manholes shall be completely filled with an approved bitumastic material. All joints between precast elements on sanitary sewer manholes shall be made with an approved bitumastic material with a minimum 12” width or an approved rubber gasket.

17.3.16.6.3 The first precast section shall be placed o the monolithic base structure before the base has taken initial set, and shall be carefully adjusted to true grade and alignment with all inlet pipes properly installed so as to form an integral watertight unit; or the section shall be mortared into a suitable groove provided in

the top of the monolithic base. The first section shall be uniformly supported by the base concrete, and shall not bear directly on any of the pipes.

17.3.16.6.4 Precast sections shall be placed and aligned to provide vertical sides and vertical alignment of the ladder rungs. The completed manhole shall be rigid, true to dimensions, and be watertight. In areas where the ground water table is expected to reach above the invert of the sanitary sewer manholes, the exterior of the manhole shall be sealed with bitumastic material if called for in the special provisions.

17.3.16.7 Inlet and Outlet Pipe – Pipe or tile placed in the masonry for inlet or outlet connections shall extend through the wall and beyond the outside surface of the wall a sufficient distance to allow for connections, and the masonry shall be carefully constructed around them so as to prevent leakage along the outer surfaces. Openings must be core-drilled in the wall of the manhole.

17.3.16.8 Excavating and Backfilling Manholes – In order to permit the joints to be mortared properly and also to permit proper compaction of the backfill material, the excavation shall be made to a diameter of at least six (6) inches greater than the diameter of the structure.

17.3.16.9 Placing Castings – Castings placed on concrete or masonry shall be bolted to the manhole and set in full mortar beds. The mortar shall be mixed in proportion of one (1) part cement to three (3) parts sand, by volume, based on dry materials. Castings shall be set accurately to the finished elevation so that no subsequent adjustment will be necessary.

17.3.16.10 Manholes in Paved Streets – Where work is in paved streets or areas which have been brought to grade, not more than sixteen (16) inches shall be provided between the top of the cone or slab and the underside of the manhole casting ring for adjustment of the casting ring to street grade.

17.3.16.11 Streets or Alleys With No Established Grade – The top of the manhole casting shall be flush with the street surface unless otherwise directed by the Engineer.

17.3.17 Fittings – Service sewers shall be connected to the wye, or riser provided in the public sewer where such is available, utilizing approved fittings or adapters. Where no wye, or riser is provided or available, connections shall be made by machine-made tap and suitable saddle, or other method approved by the Engineer.

17.3.18 Cleanouts – Cleanouts are not approved for construction on the Columbia Sewer System.

17.3.19 Pipe Covering and Embankment – This section of the specifications applies to the construction of pipe covering and embankment. Pipe covering shall be constructed where the invert of the pipe is so shallow that placing of earth over the pipe becomes necessary to provide a minimum depth of cover. Pipe cover and embankment shall be constructed where the invert of the pipe is above the existing ground and it becomes necessary to construct an embankment upon which the pipe and pipe covering is to be placed. The embankment and cover shall be constructed to lines shown on the drawings.

17.3.19.1 Pipe Bed – The area upon which the embankment for the pipe bed is to be placed shall be stripped to the extent the Engineer directs to provide a firm bedding.

17.3.19.1.1 The embankment upon which the pipe is to be installed shall be constructed up to the springing line in six (6) inch lifts, each lift being compacted to a density equal to ninety-five percent (95%) of AASHO T99 density. The material used in constructing the embankment shall be such that it will readily compact to required density. The Contractor may use any type of compacting equipment he wished provided the required end result is obtained, and provided no damage occurs to surface or subsurface improvements.

17.3.19.1.2 Pipe Cover – The pipe cover material above compacted embankment shall be placed without compaction, and shall be shaped to the required section.

17.3.19.1.3 Source of Material – The source of material shall be that which is specified in the special provisions.

17.4 TESTING FOR ACCEPTANCE OF SANITARY SEWERS

17.4.1 Testing sanitary sewers for acceptability shall be conducted by the infiltration testing technique, as specified or approved by the Engineer.

17.4.2 Test Sections – Unless otherwise specified or directed by the Engineer the first section of sanitary sewer constructed of approximately 1,200 feet in length or the entire length of the sewer if it is less than 1,200 feet shall be tested by the infiltration method before additional excavation is permitted.

17.4.2.1 The Contractor may, at his option, divide the first section of sewer into subsections of more convenient length for testing. If the section or subsection tested does not pass the leakage tests it shall be repaired and the test repeated until a satisfactory test is obtained. Excavation shall not proceed beyond the first 1,200 feet test section until test results for the entire 1,200 feet are satisfactory.

17.4.3 Allowable Leakage for Sanitary Sewer – Infiltration flow shall be measured by a 90 degree V notch weir with free fall discharge or other means acceptable to the Engineer. All gravity sewer shall be designed and specified such that the leakage outward (exfiltration) or inward (infiltration) shall not exceed two hundred (200) gallons per inch of pipe diameter per mile per day.

17.4.3.1 The result in infiltration tests shall be certified by a registered professional engineer.

17.5 MEASUREMENT AND PAYMENT

17.5.1 Work under this section will be measured and paid for as specified below. Wherever units of measure, i.e., lineal feet, each, and similar units of measurement are mentioned in the proposal, it shall be interpreted to mean the unit installed in accordance with the plans and specifications, and ready for use.

17.5.2 Sewer Pipe – Sewer pipe will be measured from center to center of manholes and depth of cut from invert to original ground line at centerline. The original ground

line will be determined immediately prior to the beginning of trench excavation. It is the Contractor's responsibility to notify the Engineer 24 hours in advance so that the Engineer may take measurements.

17.5.2.1 Payment will be made at the unit prices per lineal foot as stated in the proposal for the type of pipe specified, including pipe placed in steel casing pipe, and shall include cost of all necessary materials, tools, equipment, excavation, bedding, backfilling, cleanup, testing, etc.

17.5.3 Ductile Iron Sewers – Where ductile iron pipe is shown in lieu of vitrified clay sewer pipe, measurement and payment will be made in accordance with Item 5.2.

17.5.3.1 Cast Iron Sewers in Steel Casing Pipe – Where PVC and/or ductile iron pipe is placed in steel casing pipe, measurement will be along the centerline of the pipe.

17.5.3.1.1 Payment will be made at the unit bid price per lineal foot and shall include all necessary materials, tools and equipment necessary to install and grout the ductile iron carrier pipe inside the casing. The unit bid price does not include the casing pipe. See Sections 2.1 and 2.2.

17.5.3.2 Ductile Iron Sewers in Tunnels – When ductile iron pipe is placed in tunnels, measurement will be along the centerline of the pipe.

17.5.3.2.1 Payment will be made at the unit bid price per lineal foot and shall include all necessary materials, tools and equipment necessary to install and grout the cast iron carrier pipe inside the tunnel lining. Unit bid price does not include the tunnel. See Section 5.8.

17.5.4 Service Sewers – Measurement shall be along the pipe from the outside surface of the main sewer to the extreme end of the last pipe or fitting placed. Measurement shall be to the nearest one (1) foot.

17.5.4.1 Measurement for service risers shall be from invert of the service wye to the top of the riser fitting along the centerline of the pipe. Measurement shall be to the nearest one (1) foot.

17.5.4.2 Payment for SERVICE SEWERS shall be at the unit contract price per lineal foot for SERVICE SEWERS of the size indicated. Payment for WYES shall be at the unit contract price per each. Payment for SERVICE RISERS shall be at the unit contract price per foot for SERVICE RISERS of the size indicated. Bends, adapters and plugs shall be considered as incidental to the construction and all costs thereof shall be included in other pay items of the proposal.

17.5.4.3 Payment for cut-in connections to main sewers where no wye branch exists shall be at the contract unit price for wye branches.

17.5.5 Manholes – Manholes more than six (6') feet in depth shall be measured to the nearest one-tenth (0.10) of a foot, from invert of the outlet pipe vertically to the top of the casting, for the purpose of determining the additional depth of manhole to be paid for at the unit bid price per vertical foot in additional to the base price for each.

17.5.5.1 Drop manhole connections shall be measured to the nearest one-tenth (0.10) of a foot, from invert of the inlet pipe to the invert of the manhole.

17.5.5.2 Payment for each MANHOLE shall consist of a basic price per each, complete with frame, cover, base and steps, plus a unit price per foot, for all depth in excess of six (6') feet, plus a unit price per vertical foot for each DROP MANHOLE CONNECTION where they occur. Where more than one (1) type or size designation is shown on the drawings or called for in the special provisions, each shall be covered by a separate bid item of the following form:

17.5.5.2.1 "Type----------(or size) MANHOLE, each.

17.5.5.2.2 ADDITIONAL DEPTH OF MANHOLE, per vertical foot.

17.5.5.2.3 DROP MANHOLE CONNECTION, per vertical foot.

17.5.5.3 The unit contract prices shall be full compensation for furnishing and constructing manholes, complete in place, including excavation and connection to existing sewers.

17.5.6 Watertight Manhole Frame and Cover – The unit bid price for the item WATERTIGHT MANHOLE FRAME AND COVER shall include all labor, tools, materials and equipment for furnishing and installing this lid in lieu of a standard manhole ring and cover.

17.5.7 Steel Casing Pipe – The payable boring footage will be the distance shown on the plans or as specified by the Engineer. The unit bid price per lineal foot of STEEL CASING PIPE shall include all labor, materials, tools, and equipment necessary to install the casing. (See Section 2.8). Unit bid price does not include the carrier pipe.

17.5.8 Tunnel – TUNNEL will be paid for at the unit prices bid per lineal foot for TUNNEL for the various type and sizes for the actual length of tunnel work as shown on the plans. Payment shall include all labor, materials and equipment necessary to construct the tunnel, complete in place, including excavation and backfill, shoring and bracing, furnishing and laying casing pipe where required and all other work necessary for a complete installation. Unit bid price does not include the carrier pipe.

17.5.9 Concrete Cradle – Measurement shall be made along the centerline of the pipe and the pay quantity shall be determined from Standard Detail SSC#6 attached.

17.5.9.1 Payment for furnishing CONCRETE CRADLE shall be made at the contract unit price per cubic yard for CONCRETE CRADLE. The contract price for CONCRETE CRADLE shall also include the cost of removing and disposing of the material replaced by the CONCRETE CRADLE. Unit price does not include the pipe.

17.5.10 Concrete Encasement – Measurement shall be made along the centerline of the pipe and the pay quantity shall be determined from Standard Detail SSC #6 attached.

17.5.10.1 Payment for furnishing CONCRETE ENCASEMENT will be at the unit price per cubic yard of class of concrete stated in the proposal, such price to be paid in addition to that paid per foot of sewer for the various depths encountered. The unit price stated in the proposal shall include the cost of additional depth of excavation, the furnishing and placing of concrete and laying of pipe to line and grade on bricks. See Standard Detail SSC #2.

17.5.11 Granular Cradle – Measurement of GRANULAR CRADLE shall be made by the cubic yard in place, based on the quantities per lineal foot for the respective size of conduit, as shown on Standard Detail SSC #6.

17.5.11.1 Payment for GRANULAR CRADLE shall be made at the contract unit price per cubic yard for the type of GRANULAR CRADLE used. The contract unit price for GRANULAR CRADLE shall also include the cost of removing and disposing of the materials replaced by the GRANULAR CRADLE.

17.5.11.2 When ordered by the Engineer, payment for additional depth of GRANULAR CRADLE shall be made at the contract unit price per cubic yard for GRANULAR CRADLE measured in place.

17.5.12 Selected Granular Backfill – Measurement shall be made along the centerline of the pipe and the pay quantity shall be determined from Standard Detail SSC #6 attached.

17.5.12.1 Payment shall be made at the contract unit price per cubic yard for SELECTED GRANULAR BACKFILL. SELECTED GRANULAR BACKFILL in excess of the maximum quantity as herein specified shall be furnished and placed by the Contractor at his own expense.

17.5.13 Crushed Stone – CRUSHED STONE, to be used in stabilizing the bottom of trenches, etc., will be measured and paid for per ton at the unit priced bid by the Contractor for CRUSHED STONE, which price shall include the material and the labor incident to the placing of the stone and any additional extra depth of trench or excavation necessary to accommodate the CRUSHED STONE.

17.5.14 Unclassified Excavation – UNCLASSIFIED EXCAVATION will not be paid for separately, the cost of which shall be included in the unit price for other items of work.

17.5.14.1 When the removal of existing structures or materials is classified separately as a contract pay item, payment will be made in accordance with the contract price; otherwise such work will be considered as incidental work and will not be paid for directly, but its cost shall be included in the unit price for other items of work. In either case, such price or prices shall be full compensation for all labor, materials, tools, equipment and incidentals necessary to complete the work and in the case of pavement cut and removal, shall include the cost of the required permit for cutting pavement, unless cost of permit fees are included as a bid item in the proposal.

17.5.15 Exploratory Excavation – The cost of such excavation, where ordered by the Engineer, will be paid at the contract unit price per cubic yard for "EXPLORATORY EXCAVATION".

17.5.16 Rock Excavation – Where ROCK EXCAVATION is to be measured for payment, quantities will be determined by the Engineer. Rock required to be removed shall be computed by the cubic yard. Dimensions for pay purposes shall be the difference in elevation between the top and bottom of the rock as determined by the Engineer and the specified ditch width for the pipe size being laid. Where rock is encountered in the bottom of the trench, the maximum depth for payment purposes will be six (6) inches below the bottom of the pipe.

17.5.16.1 Payment shall be made at the contract unit price per cubic yard for ROCK EXCAVATION. These process shall be full compensation for furnishing all materials, for all preparation and excavation of rock, for backfilling the excavated trench to the bottom of the pipe which selected backfill material (3.7.22), and for all labor, equipment, tools and incidentals necessary to complete the item.

17.5.17 Remove and Replace Paving – Where excavation in pavement is required the work will be paid for at the unit bid price per lineal foot for REMOVE AND REPLACE PAVEMENT and shall be measured along the centerline of construction. Extra width will not be measured for payment.

17.5.17.1 The unit bid price for this time includes all labor, tools, equipment and materials necessary to complete the work. The unit bid price shall also include the cost of using flowable fill as backfill material and/or compaction to 95% maximum density as determined by AASHTO T-9 procedures. All compaction testing shall be certified by an approved laboratory. The unit bid price shall also include the cost of removing all paving materials which are not suitable for backfilling the trench from the job. There will be no extra payment for any of the above work, the cost of which shall be included in the unit bid price for "Remove and Replace Paving".

17.5.18 Remove and Replace Asphalt Drive and Remove and Replace Concrete Drive – This work will be paid for at the unit bid price per lineal foot for REMOVE AND REPLACE ASPHALT DRIVEWAY or REMOVE AND REPLACE CONCRETE DRIVE. Measurement for payment will be along the centerline of construction. Extra width will not be measured for payment.

17.5.18.1 The unit price bid for this item shall include all labor, tools, equipment and materials necessary to accomplish the work and shall include the cost of removing all paving materials which are not suitable for backfill in the trench from the job.

17.5.19 Resurface Existing Pavement – Payment for RESURFACING EXISTING PAVEMENT will be made at the unit bid price per square yard in accordance with field measurements of area made by the City Engineer. The Contactor shall furnish the Engineer all asphalt weight tickets at the time the work is accomplished. The computed yield, arrived at by dividing the weight of asphalt used by the measured area shall be a minimum of 150 pounds per square yard. In those areas where the work is acceptable to the State Department of Public Transportation and the City Engineer, yet the computed yield is less than 150

pounds per square yard, payment will be made for the item in direct ratio of the square of the actual yield to the square of 150 pounds per square yard.

17.5.20 PC Concrete Sidewalk – Concrete sidewalk shall be measured for payment based on the amount of sidewalk ordered removed and replaced by the Engineer. The width used for computing quantities shall be the actual width of the sidewalk unless specified otherwise by the Engineer. The unit bid price per square foot for this item will be complete payment for the above work.

17.5.21 Sheeting and Bracing – Payment for SHEETING AND BRACING, except when ordered left in place, and all other work incidental to SHEETING AND BRACING shall not be made separately unless specified or as shown on the plans or as directed by the Engineer, but shall be included in the contract price for other items.

17.5.21.1 Payment for timber sheeting ordered left in place shall be made at the contract unit price per 1,000 board feet of TIMBER SHEETING LEFT IN PLACE.

17.5.21.2 Payment for STEEL SHEET PILING when specified shall be made at the contract unit price per square foot for STEEL SHEET PILING.

17.5.21.3 Payment for STEEL SHEET PILING ordered left in place shall be made at the contract unit price per square foot for STEEL SHEET PILING LEFT IN PLACE.

17.5.22 Sodding, Fertilizing and Seeding – Measurement of surfaces to be sodded or seeded shall be made of the area within the rights-of-way designated by the Engineer for restoration. Payment shall be made at the contract unit bid price to the nearest one-tenth (0.10) acre, for FERTILIZING AND SEEDING of class specified. The cost of restoring areas beyond the right-of-way, designated by the Engineer, shall be borne by the Contractor.

17.5.23 Connections to Other Sewers or to Appurtenances – The lump sum price for making connections to other sanitary sewers and appurtenances shall be full compensation for removing, repairing and/or replacing pipe and/or structures and shall be full compensation for the completed work in place including all materials, labor, tools and equipment.

STANDARD DITCH BACKFILL DETAIL

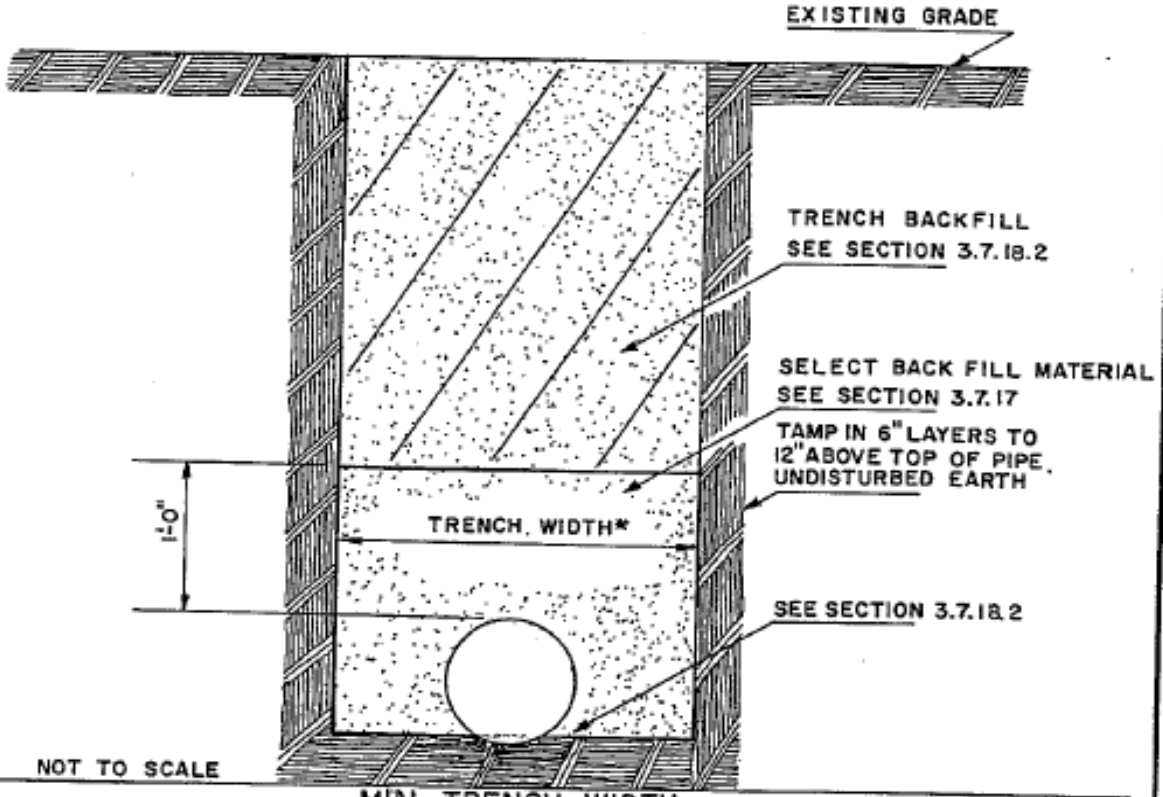

NOT TO SCALE

MIN. TRENCH WIDTH

PIPE SIZE I.D.	6" THRU 10"	12"	15"	18"	21"	24"
TRENCH WIDTH*	2'-6"	2'-8"	2'-10"	3'-2"	3'-8"	4'-0"
TRENCH WIDTH WITH BRACING	3'-2"	3'-4"	3'-6"	3'-10"	4'-4"	4'-8"

TRENCH WIDTH DIMENSIONS ARE FROM THE INSIDE OF THE SHEETING AND BRACING AND AT AND BELOW THE TOP OF THE PIPE.

SEE SECT. 3.7.3 FOR PIPE OVER 24" DIA.

SOUTH CAROLINA REGISTERED PROFESSIONAL ENGINEER No. 15973 JOHN A. RICKETTS

CITY ENGINEER

REVISED: 2-21-94

REVISED: NOV. 2, 1979

DATE: 9-8-78

COLUMBIA ENGINEERING DEPARTMENT

STANDARD DETAIL SSC # 1

CONCRETE PIPE ENCASEMENT

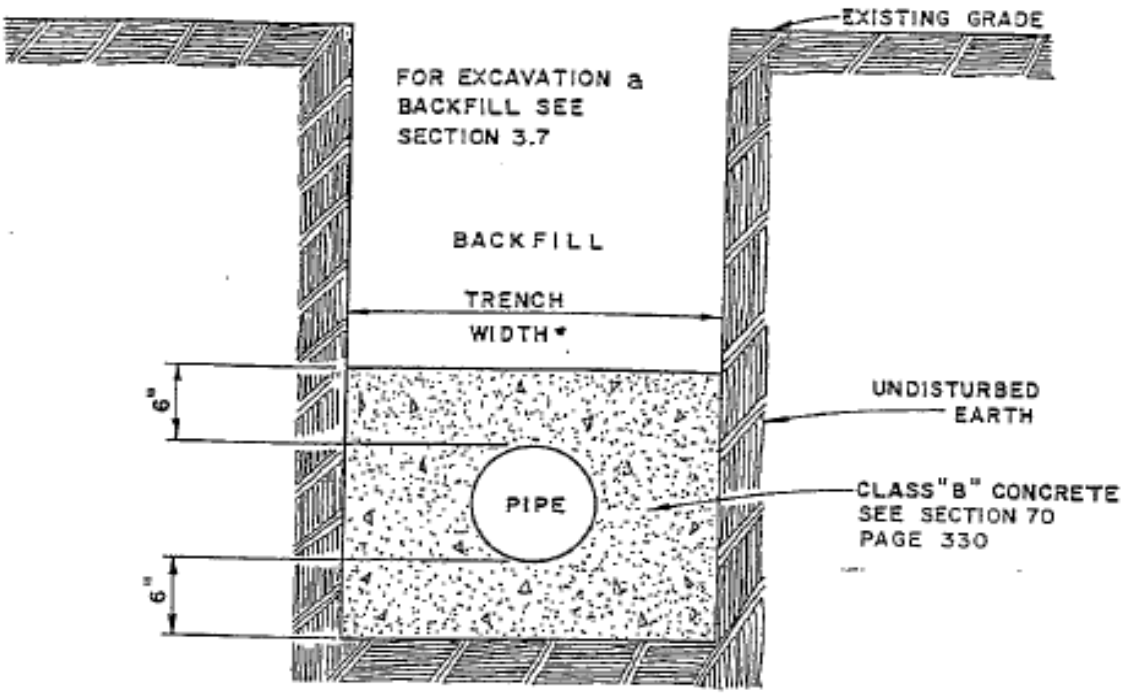

NOT TO SCALE

MIN.. TRENCH WIDTH

PIPE SIZE I.D.	6" THRU 10"	12"	15"	18"	21"	24"
TRENCH WIDTH*	2'-6"	2'-8"	2'-10"	3'-2"	3'-8"	4'-0"
TRENCH WIDTH WITH BRACING	3'-2"	3'-4"	3'-6"	3'-10'	4'-4"	4'-8"

TRENCH WIDTH DIMENSIONS ARE FROM THE INSIDE OF THE SHEETING AND BRACING AND AT AND BELOW THE TOP OF THE PIPE.

CONCRETE USED IN ENCASEMENT SHALL CONFORM TO SECTION 701 OF THE SCDH & PT SPECIFICATIONS FOR HIGHWAY CONSTRUCTION, LATEST EDITION.

SEE SECT. 3.7.3 FOR PIPE OVER 24" DIA.

COLUMBIA ENGINEERING DEPARTMENT

REVISED: 2-21-94

REVISED: NOV. 2, 1979

SOUTH CAROLINA REGISTERED PROFESSIONAL ENGINEER No.

CITY ENGINEER

DATE: 9-8-78

STANDARD DETAIL #SSC 2

GRANULAR CRADLE .

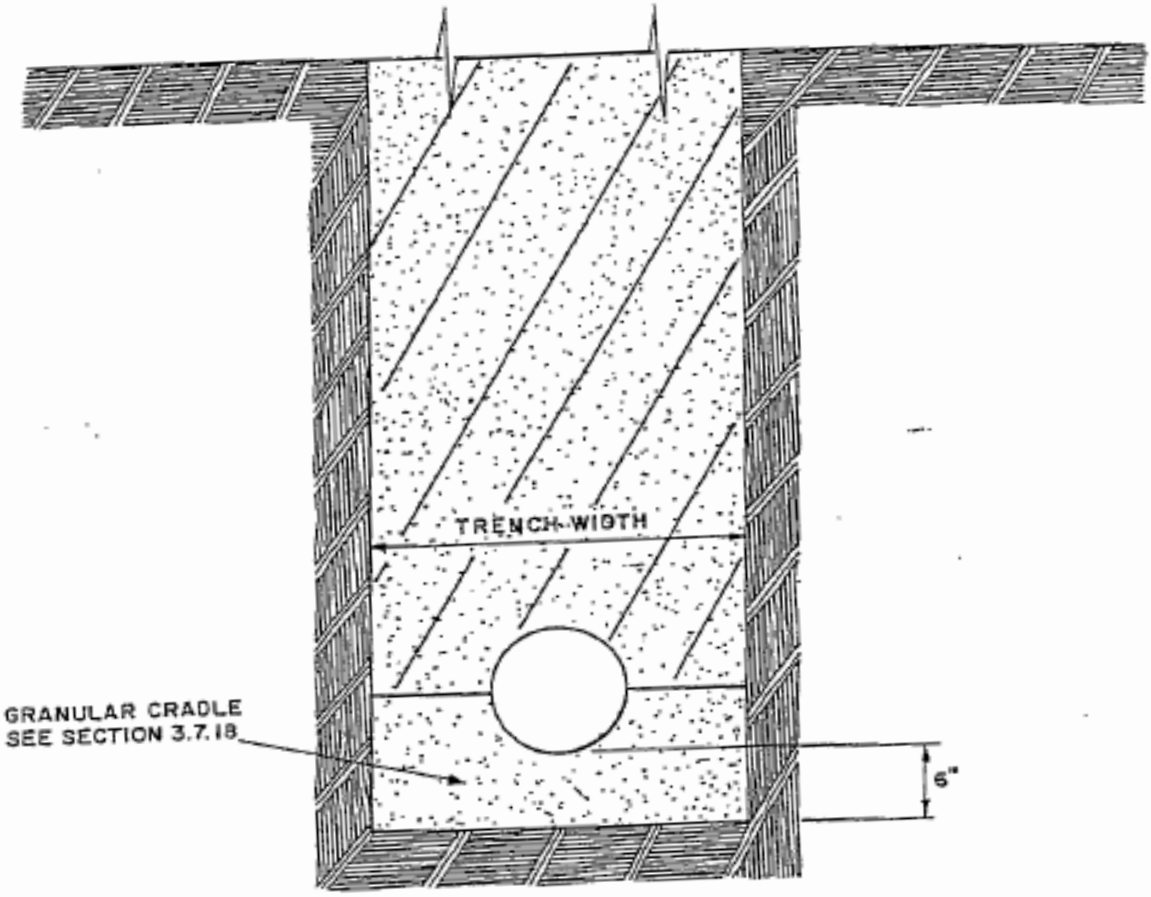

REVISED: 2-21-94

LIMITS FOR EXCAVATING FOR PAYMENT PURPOSES ARE AS SHOown IN TABLE I ANY EXCAVATION BEYOND THESE LIMITS WILL BE BACKFILLED WITH A SUITABLE MATERIAL AS APPROVED BY THE ENGINEER.

FOR MINIMUM TRENCH WIDTH SEE SECTION 3.7.3.

REVISED: NOV. 2, 1979

DATE: 9-8-78

COLUMBIA ENGINEERING DEPARTMENT

CONCRETE CRADLE

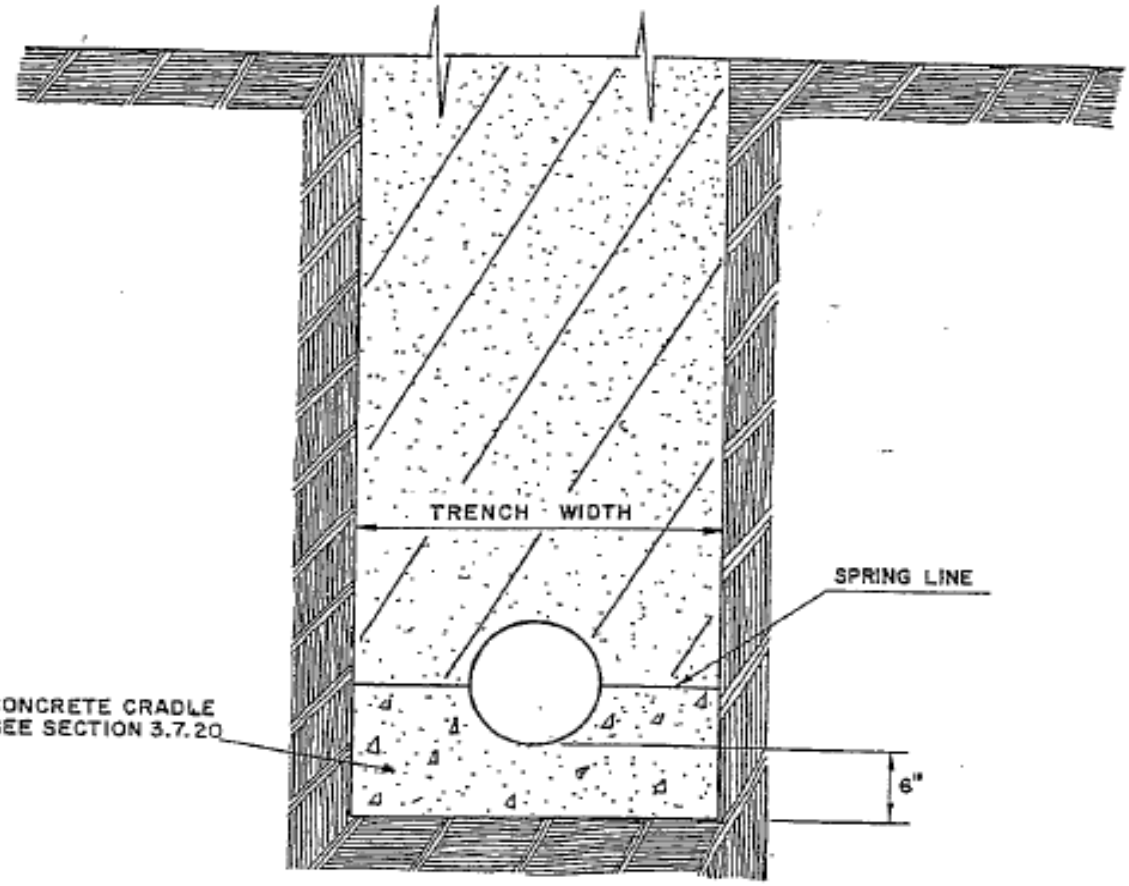

LIMITS FOR EXCAVATING FOR PAYMENT PURPOSES ARE AS SHOWN IN TABLE I ANY EXCAVATION BEYOND THESE LIMITS WILL BE BACKFILLED WITH A SUITABLE MATERIAL AS APPROVED BY THE ENGINEER.

FOR MINIMUM TRENCH WIDTH SEE SECTION 3.7.3

COLUMBIA ENGINEERING DEPARTMENT

REVISED: AUG. 15, 1990

REVISED: NOV. 2, 197

REVISED: 2-21-94

SOUTH CAROLINA REGISTERED PROFESSIONAL ENGINEER No. 5553 J. RICKETTS

CITY ENGINEER

DATE: 9-8-78

STANDARD DETAIL SSC #4

TYPICAL PERMANENT REPAIR SECTION

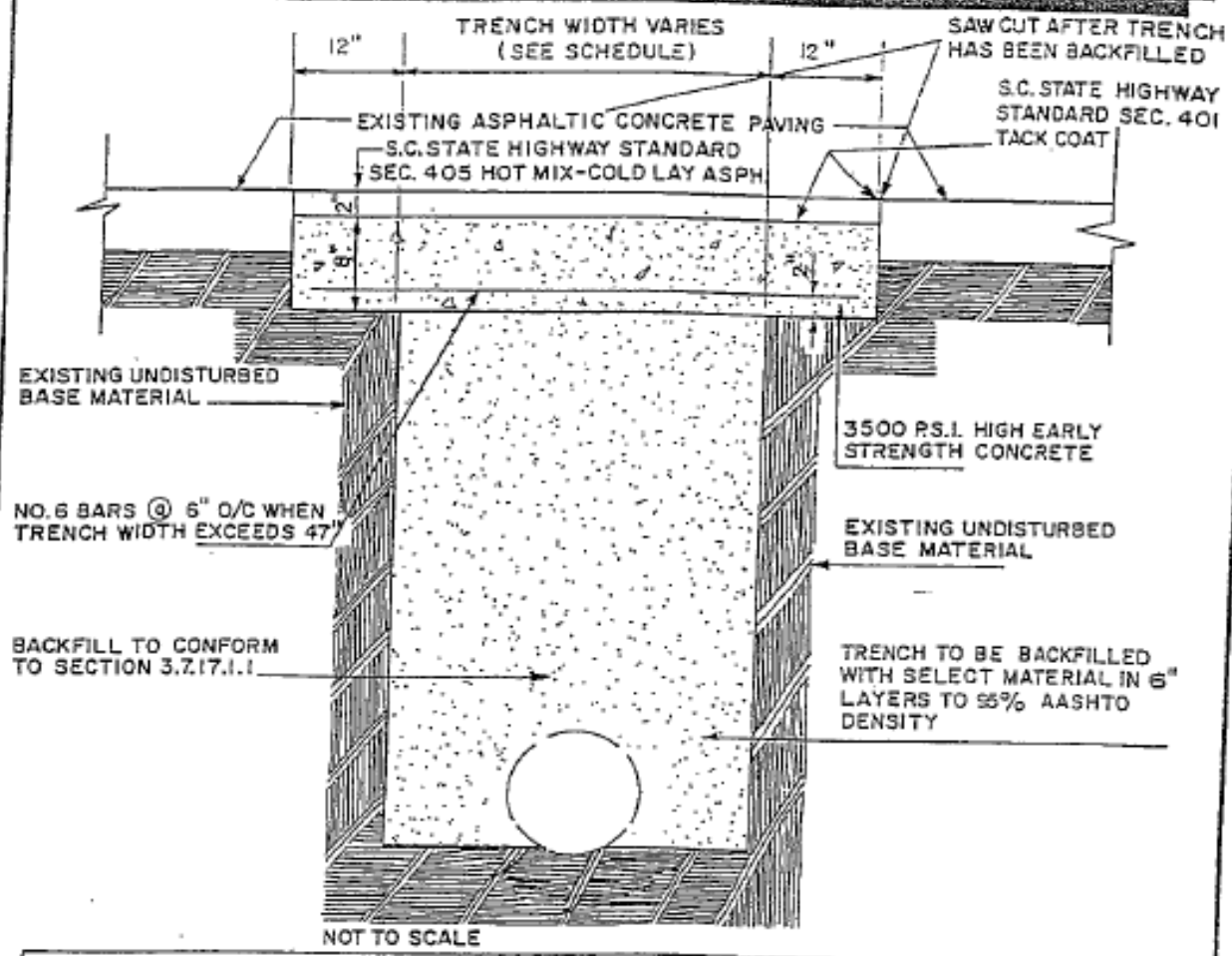

NOT TO SCALE

MIN. TRENCH WIDTH						
PIPE SIZE I.D.	6" THRU 10"	12"	15"	18"	21"	24"
TRENCH WIDTH	3'-0"	3'-0"	3'-3"	3'-6"	3'-9"	4'-6"
TRENCH WIDTH WITH BRACING	4'-0"	4'-0"	4'-3"	4'-6"	4'-9"	5'-6"

TAR | REVISED TABLE

ALL CONSTRUCTION AND MATERIALS SHALL BE IN ACCORDANCE WITH CITY OF COLUMBIA AND SCDOT STANDARD SPECIFICATIONS.

SEE SECTION 3.7.3 FOR PIPE OVER 24" DIA.

REVISED-2/17/94

REVISED-9/10/93

CITY ENGINEER

DEPARTMENT OF UTILITIES & ENGINEERING

REVISED: NOV. 2, 1979

DATE: 9-8-78

GRANULAR/CONCRETE CRADLE VOLUMES

TABLE I

INSIDE DIAMETER OF CONDUIT IN INCHES "D"	MINIMUM TRENCH WIDTH AT TOP OF CONDUIT	PAYMENT QUANTITIES PER FOOT OF CONDUIT						
		GRANULAR CRADLE CONCRETE CRADLE CU. YDS./FT.	PERMANENT TYPE PAV'T REMOVAL AND REPLACEMENT SQ. YDS. PER FT.	CONCRETE FOR PERMANENT TYPE REPLACEMENT REPAIR CU. YDS. PER FOOT	CONCRETE PIPE PROTECTION CU. YDS./FT.	SELECT BACKFILL CU. YDS./FT. OF DEPTH	CONCRETE ENCASEMENT CU. YDS./FT.	TEMPORARY COURSE AGGREGATE SURFACE CU. YDS./FT.
6	2'-6"	0.07	0.56	0.13	0.07	0.09	0.14	0.05
8	2'-6"	0.07	0.56	0.13	0.07	0.09	0.14	0.05
10	2'-6"	0.08	0.56	0.13	0.08	0.09	0.16	0.05
12	2'-8"	0.09	0.57	0.13	0.09	0.10	0.18	0.05
15	2'-10"	0.09	0.61	0.13	0.09	0.10	0.18	0.05
18	3'-2"	0.12	0.64	0.14	0.12	0.12	0.24	0.06
21	3'-8"	0.15	0.69	0.15	0.15	0.14	0.30	0.07
24	4'-0"	0.17	0.73	0.16	0.17	0.15	0.34	0.07
27	4'-3"	0.19	0.75	0.17	0.19	0.16	0.38	0.08
30	4'-7"	0.21	0.80	0.18	0.21	0.17	0.42	0.09
33	5'-4"	0.27	0.88	0.20	0.27	0.20	0.54	0.10
36	5'-8"	0.29	0.92	0.20	0.29	0.21	0.58	0.11
42	6'-3"	0.35	0.98	0.22	0.35	0.23	0.70	0.12
48	6'-10"	0.40	1.05	0.23	0.40	0.25	0.80	0.13
54	7'-11"	0.51	1.17	0.25	0.51	0.29	1.02	0.15
60	8'-6"	0.58	1.23	0.27	0.58	0.31	1.16	0.16
66	9'-1"	0.65	1.30	0.29	0.65	0.33	1.30	0.17
72	9'-8"	0.72	1.30	0.30	0.72	0.36	1.44	0.18
78	10'-3"	0.79	1.43	0.32	0.79	0.38	1.58	0.19
84	10'-10"	0.86	1.49	0.33	0.86	0.40	1.72	0.20
90	11'-5"	0.94	1.56	0.35	0.94	0.42	1.88	0.21
96	12'-0"	1.02	1.64	0.36	1.02	0.44	2.04	0.22
102	12'-7"	1.10	1.68	0.38	1.10	0.47	2.20	0.24
108	13'-2"	1.19	1.75	0.39	1.19	0.49	2.38	0.25

PAVEMENT REPLACEMENT BASED ON 8" THICK CONCRETE SLAB.
PIPE FROM 6" TO 36" IS DIMENSIONED FOR VCP.

PIPE FROM 42" AND LARGER IS DIMENSIONED FOR RCCP, CLASS III, WALL B.

CALCULATIONS BASED ON CITY OF COLUMBIA SPECIFICATIONS AND DETAILS FOR SANITARY SEWER CONSTRUCTION.

JBR	REVISED TABLE ON CONCRETE REPAIR

SOUTH CAROLINA REGISTERED PROFESSIONAL ENGINEER No. 4589 JOHN A. RICKETTS

CITY ENGINEER

REVISED MAXIMUM TRENCH WIDTH CHANGED TO MINIMUM 2-21-94

REVISED TABLES ON CONCRETE REPAIR AND PAVEMENT REPLACEMENT

DEPARTMENT OF UTILITIES & ENGINEERING | 9/10/93

DATE: 9-12-78

STANDARD DETAIL SSC # 6

SERVICE WYE

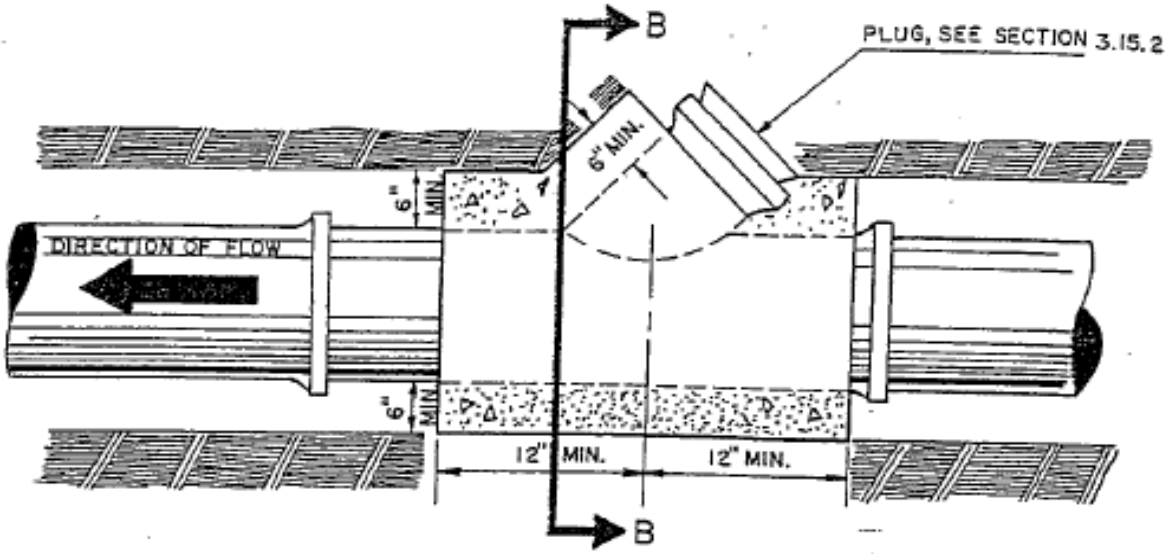

PLAN

NOT TO SCALE

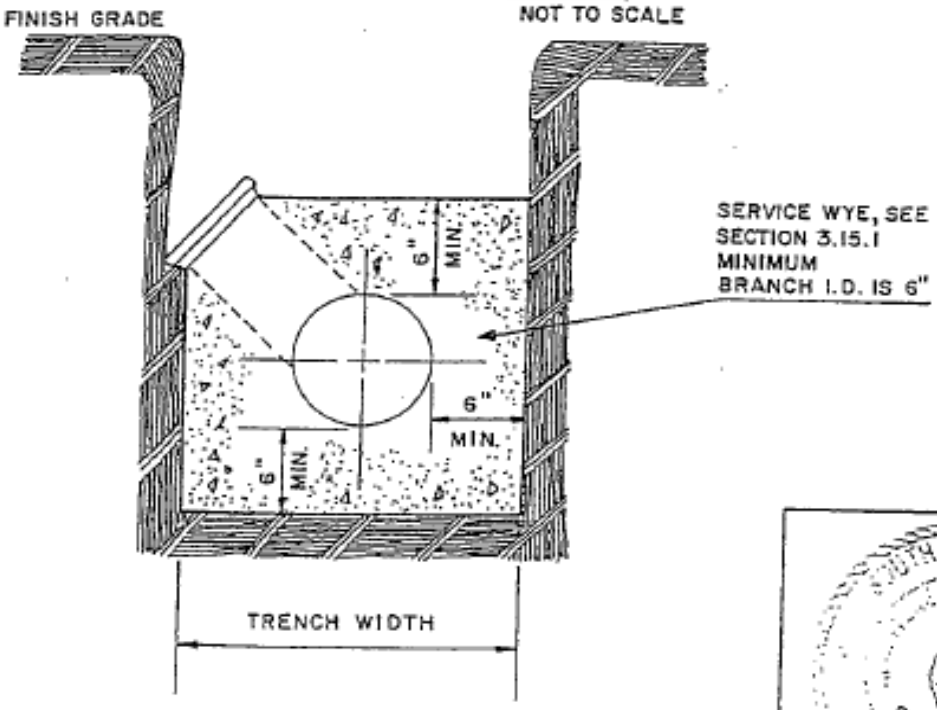

SECTION "B-B"

NOT TO SCALE

CL. B. CONCRETE PER SCDHPT SECT. 701

CITY ENGINEER

COLUMBIA ENGINEERING DEPARTMENT

REVISED: NOV. 12, 1979

DATE: 9-8-78

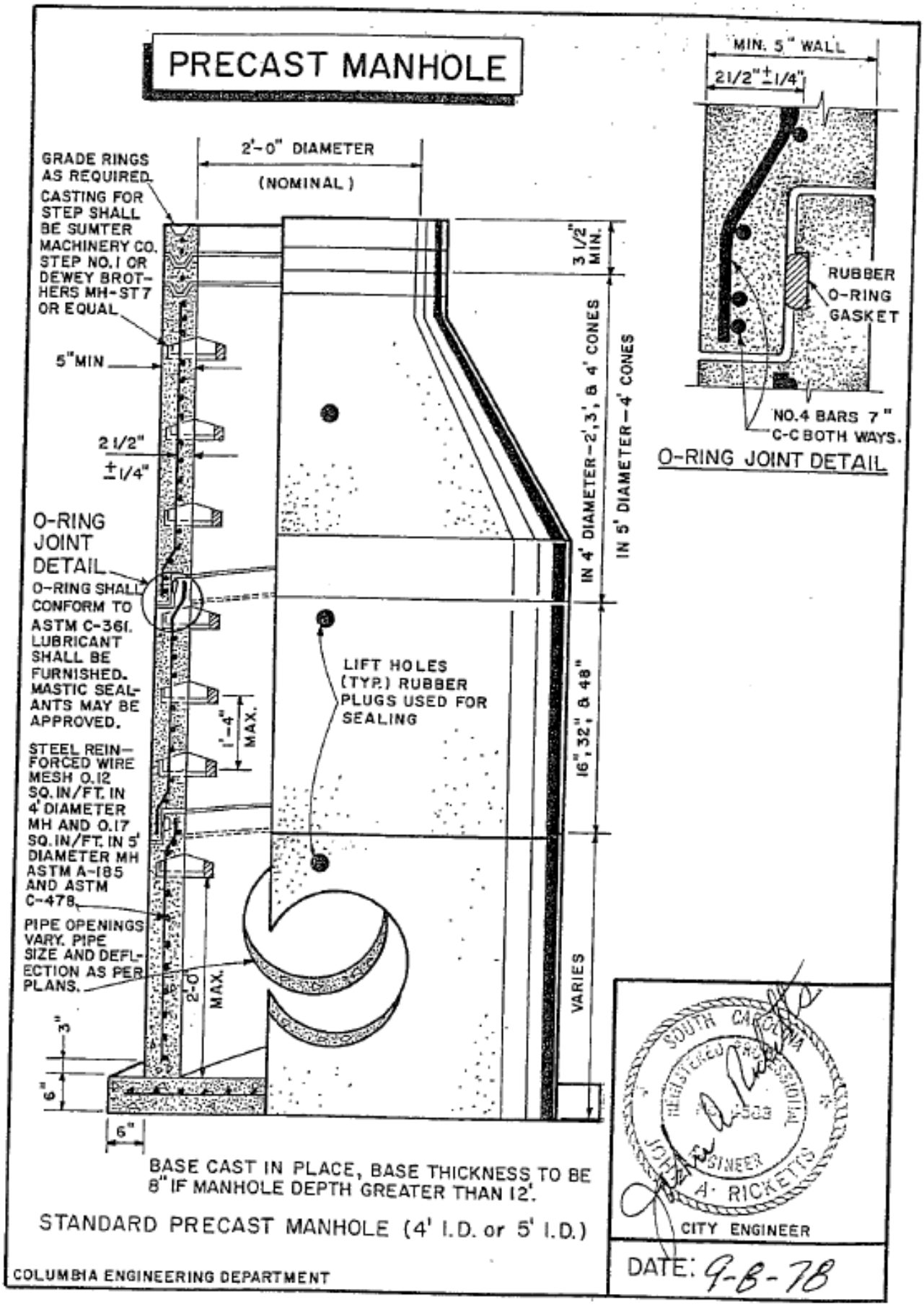
PRECAST MANHOLE
2'-0" DIAMETER
(NOMINAL)
GRADE RINGS AS REQUIRED.
CASTING FOR STEP SHALL BE SUMTER MACHINERY CO. STEP NO. 1 OR DEWEY BROTHERS MH-ST7 OR EQUAL
5" MIN
2 1/2" ±1/4"
O-RING JOINT DETAIL
O-RING SHALL CONFORM TO ASTM C-361. LUBRICANT SHALL BE FURNISHED. MASTIC SEALANTS MAY BE APPROVED.
STEEL REINFORCED WIRE MESH 0.12 SQ. IN/FT. IN 4' DIAMETER MH AND 0.17 SQ. IN/FT. IN 5' DIAMETER MH ASTM A-185 AND ASTM C-478.
PIPE OPENINGS VARY. PIPE SIZE AND DEFLECTION AS PER PLANS.
1'-4" MAX.
2'-0" MAX.
3"
6"
6"
LIFT HOLES (TYP.) RUBBER PLUGS USED FOR SEALING
3 1/2" MIN.
IN 4' DIAMETER-2', 3', & 4' CONES
IN 5' DIAMETER-4' CONES
16", 32", & 48"
VARIES
BASE CAST IN PLACE, BASE THICKNESS TO BE 8" IF MANHOLE DEPTH GREATER THAN 12'.
STANDARD PRECAST MANHOLE (4' I.D. or 5' I.D.)
COLUMBIA ENGINEERING DEPARTMENT
MIN. 5" WALL
21/2" ±1/4"
RUBBER O-RING GASKET
NO. 4 BARS 7" C-C BOTH WAYS.
O-RING JOINT DETAIL
SOUTH CAROLINA
REGISTERED PROFESSIONAL ENGINEER
JOHN A. RICKETTS
CITY ENGINEER
DATE: 9-8-78

STANDARD BRICK MANHOLE

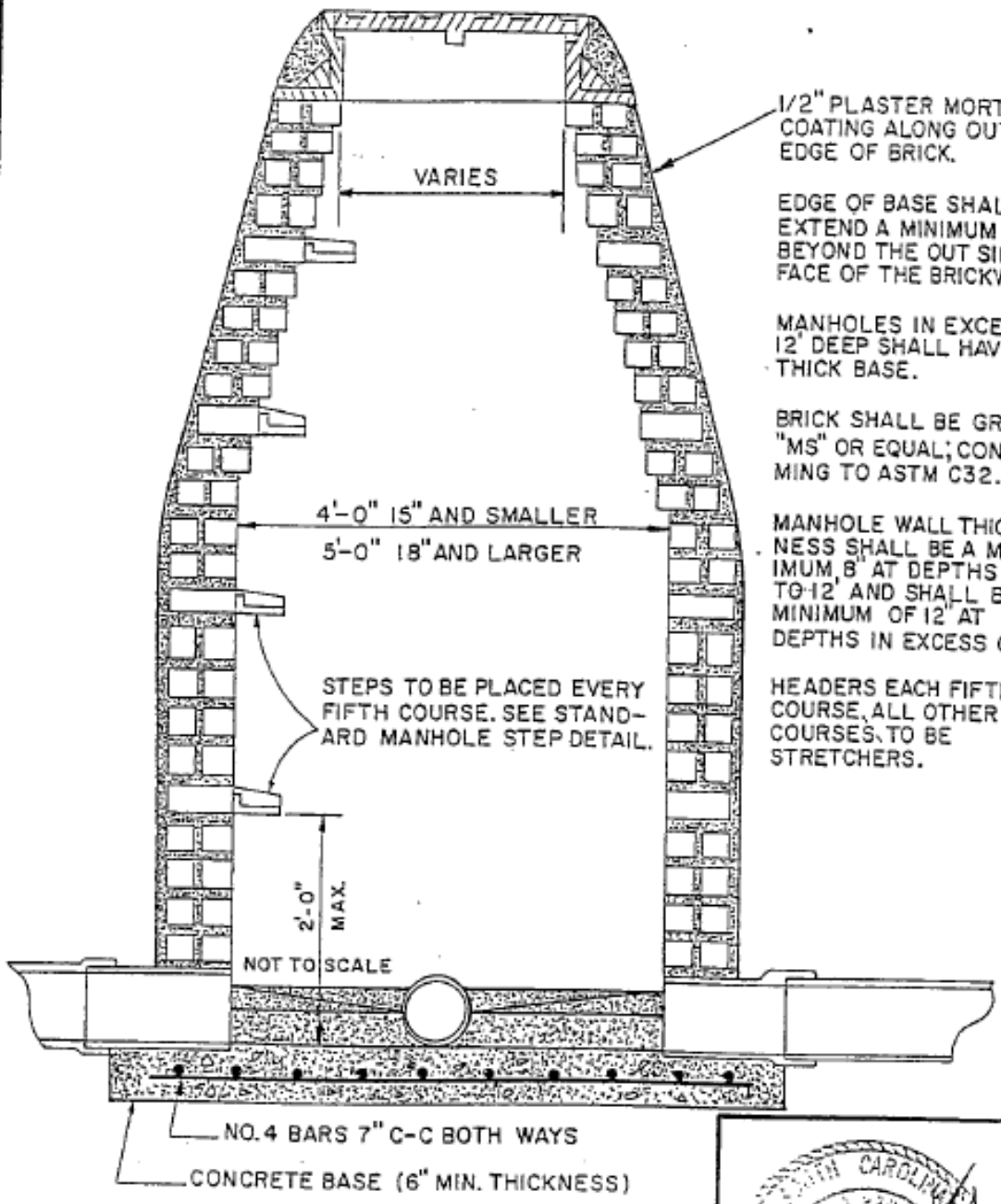

1/2" PLASTER MORTAR COATING ALONG OUT SIDE EDGE OF BRICK.

EDGE OF BASE SHALL EXTEND A MINIMUM OF 6" BEYOND THE OUT SIDE FACE OF THE BRICKWORK.

MANHOLES IN EXCESS OF 12' DEEP SHALL HAVE 8" THICK BASE.

BRICK SHALL BE GRADE "MS" OR EQUAL; CONFORMING TO ASTM C32.

MANHOLE WALL THICKNESS SHALL BE A MINIMUM 8" AT DEPTHS UP TO 12' AND SHALL BE A MINIMUM OF 12" AT DEPTHS IN EXCESS OF 12'.

HEADERS EACH FIFTH COURSE, ALL OTHER COURSES TO BE STRETCHERS.

CITY ENGINEER

DATE: 9-8-78

COLUMBIA ENGINEERING DEPARTMENT

STANDARD DETAIL SSC # 13

STANDARD DROP MANHOLE

EDGE OF BASE SHALL EXTEND A MINIMUM OF 6" BEYOND THE OUTSIDE FACE OF THE BRICK WORK.

MANHOLES IN EXCESS OF 12' DEEP SHALL HAVE 8" THICK BASE.

BRICK SHALL BE GRADE "MS" OR EQUAL; CONFORMING TO ASTM C32.

FOR INCOMING SEWER SMALLER THAN THAN 12" USE VERTICAL PIPE OF SAME DIAMETER. FOR INCOMING SEWER 12" OR GREATER, USE 12" VERTICAL PIPE.

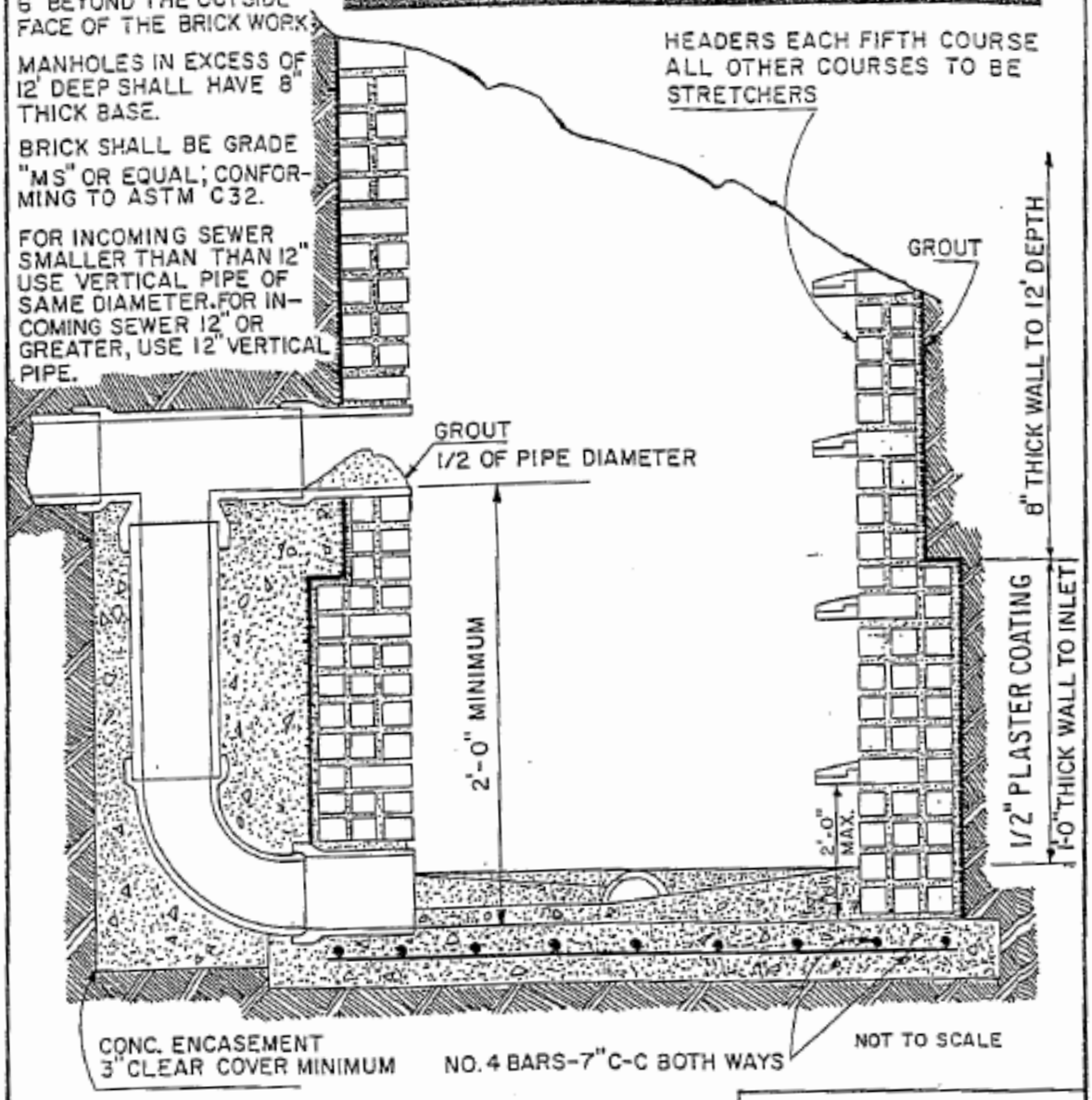

CONCRETE TO BE IN ACCORDANCE WITH SECTION 3.16.2

CITY ENGINEER

REVISED: NOV. 2, 1979

DATE: 9-8-78

COLUMBIA ENGINEERING DEPARTMENT

SHALLOW MANHOLE

ITEM	DESCRIPTION	WALL THICKNESS
2.8	COMMON BRICK	8"
2.8.1	CEMENT BRICK	8"
2.12	CONCRETE	5"

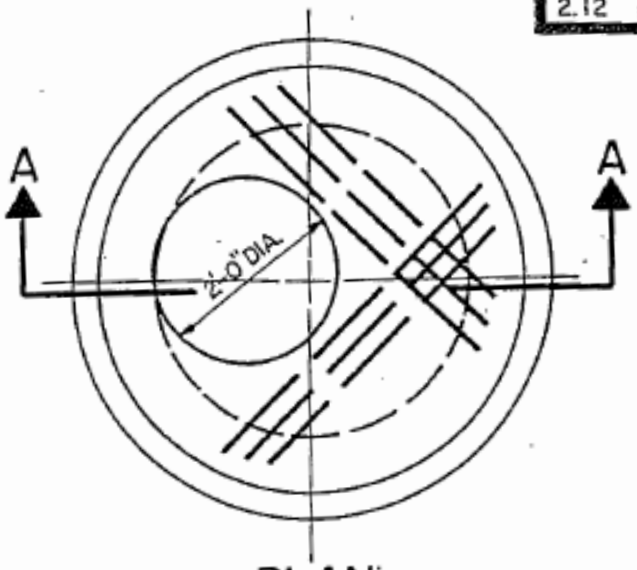

PLAN

NOT TO SCALE

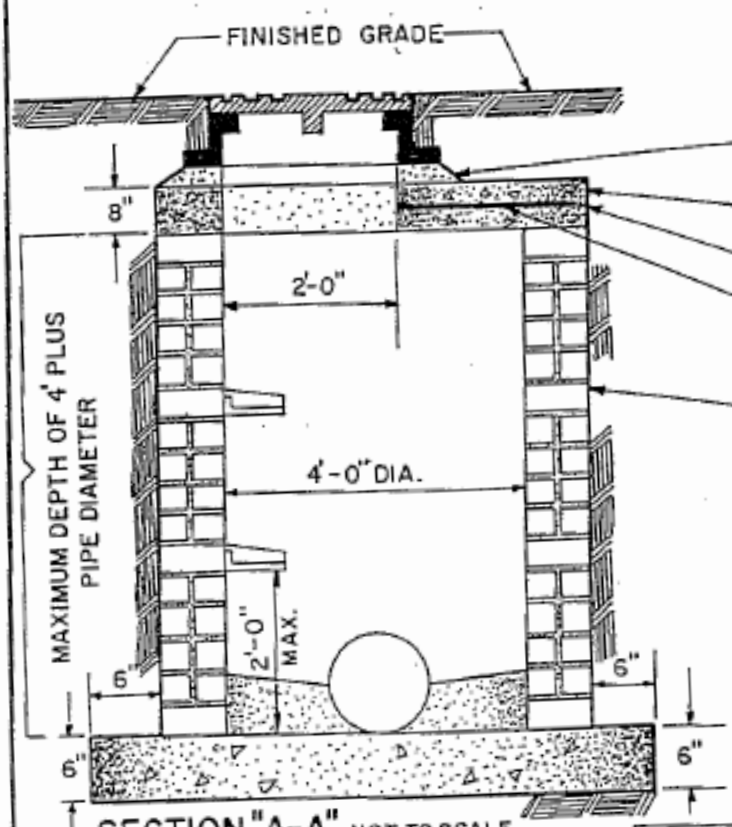

SECTION "A-A" NOT TO SCALE

COLUMBIA ENGINEERING DEPARTMENT

REVISED: NOV. 2, 1979

DATE: 9-6-78

SOUTH CAROLINA
REGISTERED
A. RICKETTS
CITY ENGINEER

TYPICAL SECTION SHOWING BOTTOM OF MANHOLE

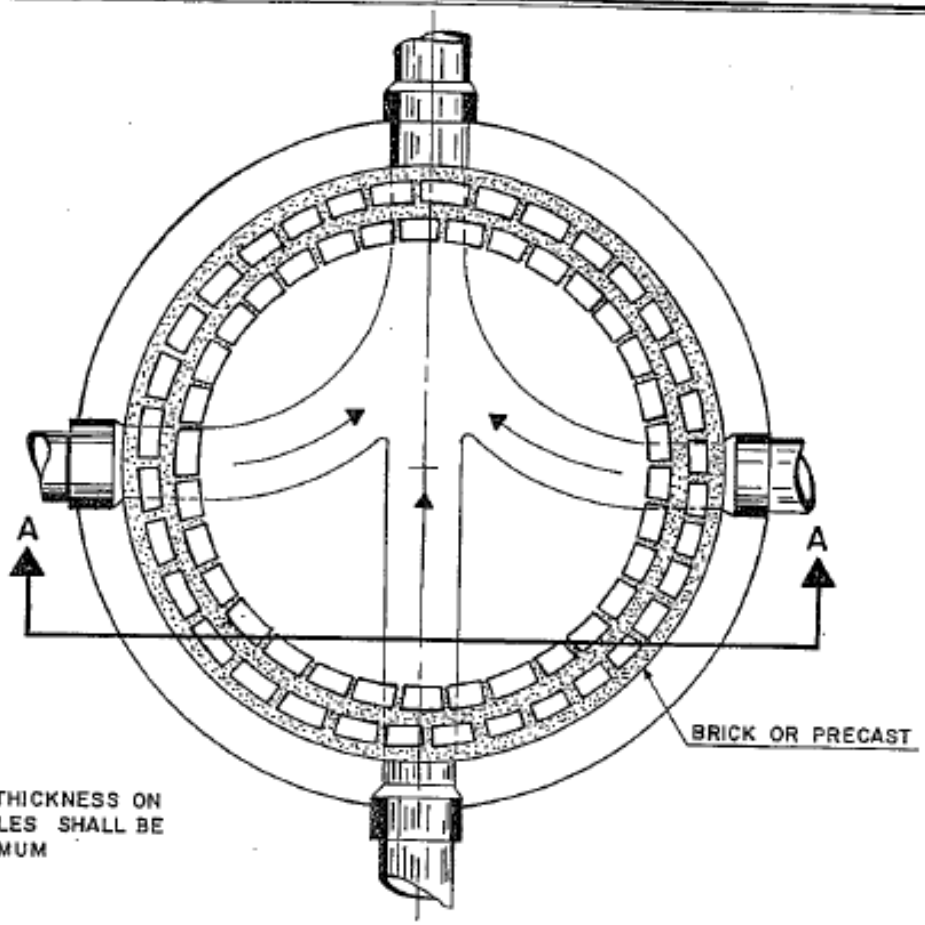

WALL THICKNESS ON MANHOLES SHALL BE 5" MINIMUM

PLAN

NOT TO SCALE

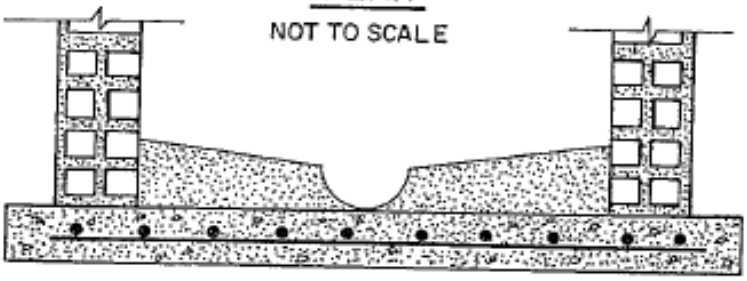

SECTION A-A

NOT TO SCALE

SOUTH CAROLINA REGISTERED PROFESSIONAL ENGINEER No. 6583 JOHN A. RICKETTS

CITY ENGINEER

COLUMBIA ENGINEERING DEPARTMENT

REVISED:

DATE: 11-6-79

STANDARD DETAIL SSC# 17

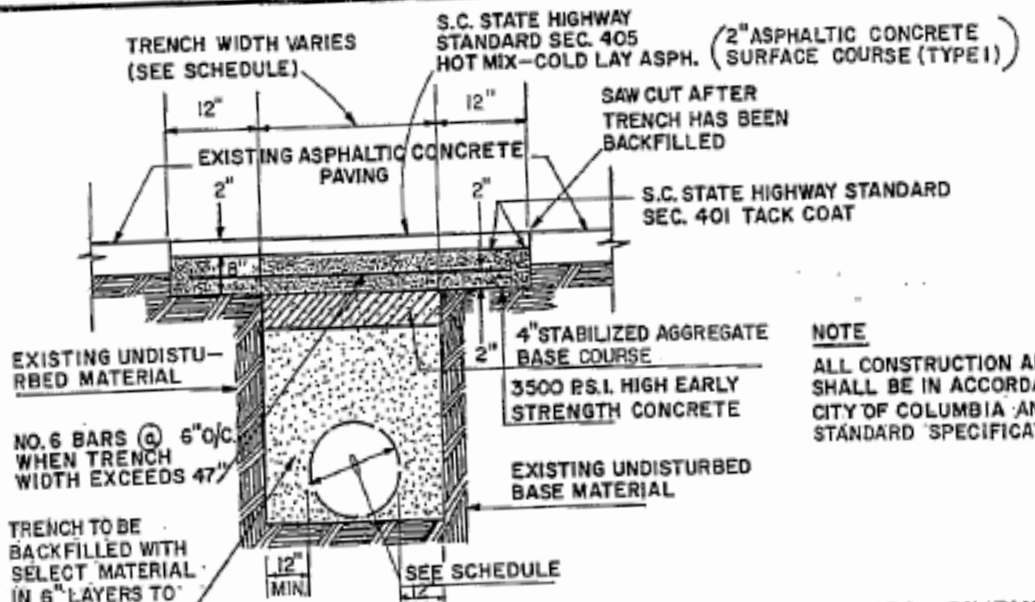

NOTE

ALL CONSTRUCTION AND MATERIALS SHALL BE IN ACCORDANCE WITH CITY OF COLUMBIA AND SCDOT STANDARD SPECIFICATIONS.

TYPICAL PERMANENT REPAIR SECTION ROAD PAVEMENT

NOT TO SCALE.

MIN. TRENCH WIDTH SCHEDULE					
PIPE SIZE I.D.	12" & LESS	15" TO 21"	24" TO 30"	33" TO 54"	60" & OVER
TRENCH WIDTH (W/O SHORING)	36"	I.D+24"	I.D+30"	O.D.+30"	O.D.+36"
TRENCH WIDTH (W/SHORING)	48"	I.D+36"	I.D+42"	O.D.+42"	O.D.+48"

FOR SIZES LARGER THAN 60" SEE SSC # 3.7.3.2.

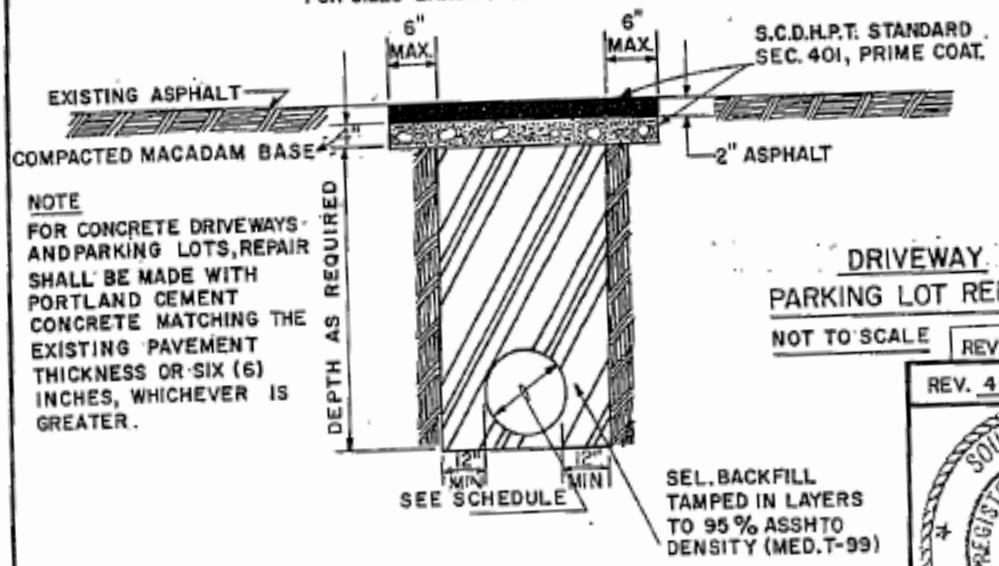

NOTE

FOR CONCRETE DRIVEWAYS AND PARKING LOTS, REPAIR SHALL BE MADE WITH PORTLAND CEMENT CONCRETE MATCHING THE EXISTING PAVEMENT THICKNESS OR SIX (6) INCHES, WHICHEVER IS GREATER.

DRIVEWAY & PARKING LOT REPAIRS

NOT TO SCALE

REV. 2-21-94	
REV. 4-9-79	JAR

SOUTH CAROLINA REGISTERED PROFESSIONAL ENGINEER No. 4583 CITY ENGINEER

DATE: 9-20-78

TYPICAL REPAIR SECTIONS

DEPARTMENT OF UTILITIES AND ENGINEERING

REVISED – 9/10/93

STANDARD DETAIL WC # 2 & SSC # 18

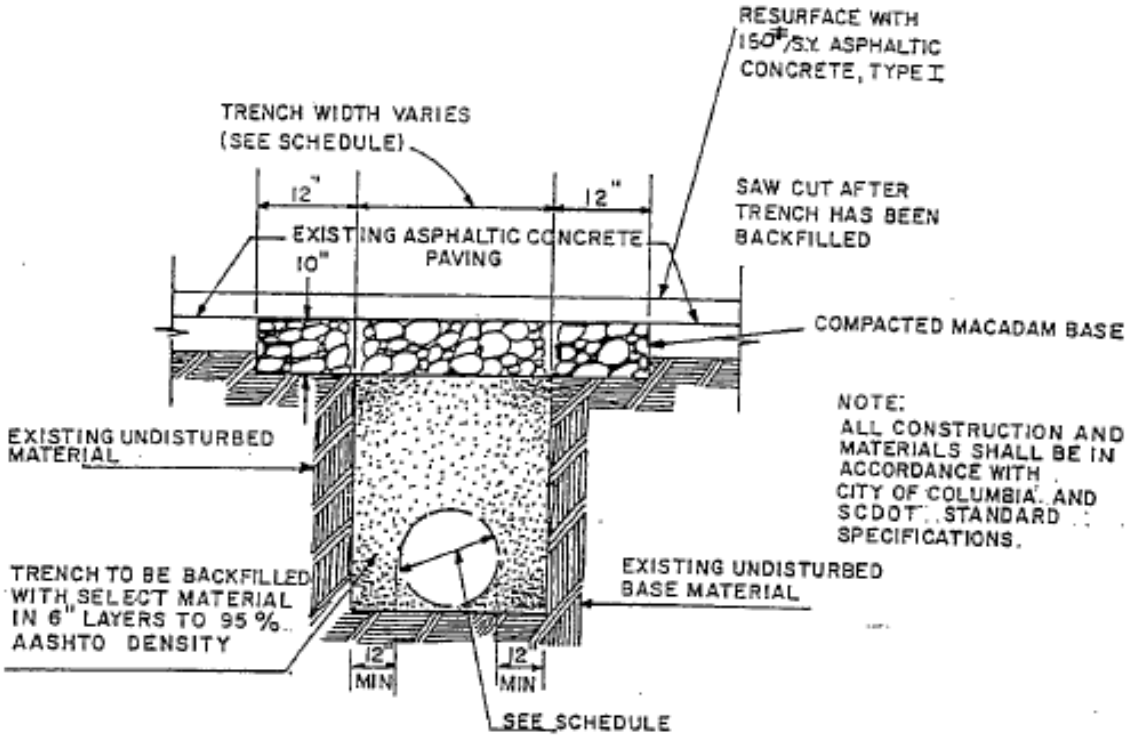

TYPICAL PERMANENT REPAIR SECTION ROAD PAVEMENT

NOT TO SCALE

FOR USE ONLY ON SECONDARY ROADS WITH LOW VOLUME OF TRAFFIC WHERE CONSTRUCTION IS GENERALLY PARALLELING THE CENTERLINE OF THE PAVING AND EXISTING STREET DOES NOT HAVE CURB AND GUTTER

MIN. TRENCH WIDTH SCHEDULE					
PIPE SIZE I.D.	12" & LESS	15" TO 21"	24" TO 30"	33" TO 54"	60" & OVER
TRENCH WIDTH (W/O SHORING)	36"	I.D.+24"	I.D.+30"	O.D.+30"	O.D.+36"
TRENCH WIDTH (W/SHORING)	48"	I.D.+36"	I.D+42"	O.D+42"	O.D+48"

SOUTH CAROLINA REGISTERED PROFESSIONAL ENGINEER No. 4583 JOHN A. RICKETTS

TYPICAL REPAIR SECTIONS

REVISED: 2-21-94 | REVISED - 9/10/93

DEPARTMENT OF UTILITIES & ENGINEERING | REVISED DATE: 8-20-79 JPR2

CITY ENGINEER

DATE: 8-16-79

TYPICAL REPAIR SECTION

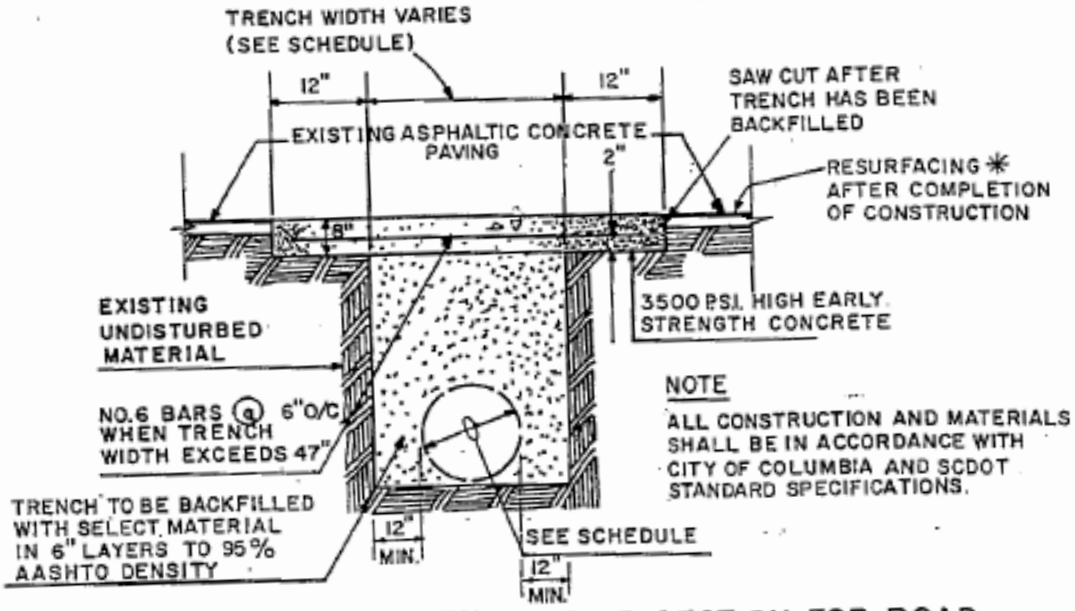

TYPICAL PERMANENT REPAIR SECTION FOR ROAD PAVEMENT WHEN ROAD IS TO BE RESURFACED

(NOT TO SCALE)

MIN. TRENCH WIDTH SCHEDULE					
PIPE SIZE I.D.	12" & LESS	15" TO 21"	24" TO 30"	33" TO 54"	60" & OVER
TRENCH WIDTH (W/O SHORING)	36"	I.D+24"	I.D+30"	O.D.+30"	O.D.+36"
TRENCH WIDTH (W/SHORING)	48"	I.D+36"	I.D.+42"	O.D.+42"	O.D.+48"

FOR SIZES LARGER THAN 60" SEE SSC#3.7.3.2.

✱ ON STREETS WITH EXISTING CURB AND GUTTER, EXISTING ASPHALT PAVEMENT SHALL BE MILLED TO A UNIFORM DEPTH OF 1-1/4" BELOW EDGE OF GUTTER PRIOR TO RESURFACING.

REVISED: 2-21-94	
REVISED – 9/10/93	
REV.	8-22-88

6-25-79

CITY ENGINEER

DATE: 6-25-79

(THIS SECTION TO BE USED ONLY WHEN SPECIFIED ON THE BID PROPOSAL FORM)
DEPARMENT OF UTILITIES & ENGINEERING

STANDARD DETAIL WC #13 & SSC. #19

STANDARD PIPE BEDDING AND BACKFILLING DETAIL PVC PIPE

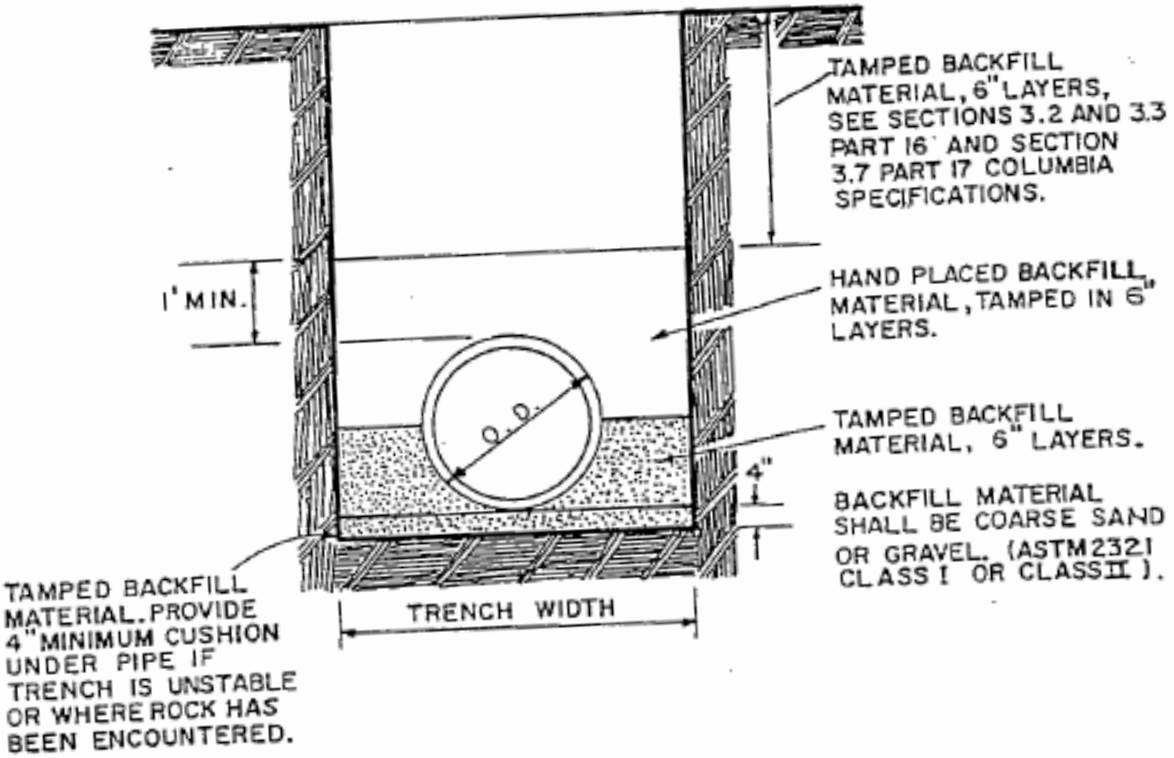

THE PIPE IS TO BE BEDDED IN COMPACTED 6" LAYERS TO THE SPRINGING LINE FIRST, THEN BACK-FILLED WITH HAND PLACED MATERIAL COMPACTED IN 6" LAYERS TO A DEPTH OF 1' MINIMUM ABOVE THE PIPE. SEE SECTIONS 3.2 AND 3.3 (PART 16) AND SECTION 3.7 (PART 17) COLUMBIA SPECIFICATIONS FOR REMAINDER OF THE BACKFILL.

CITY ENGINEER

DATE: 11 - 25 - 91

DEPARTMENT OF UTILITIES AND ENGINEERING

STANDARD DETAIL WC #11 AND SSC #20

PART 18: SPECIFICATION FOR ROADWAY IMPROVEMENTS MATERIALS AND CONSTRUCTION

TABLE OF CONTENTS

Paragraph	Description	Page No.
18.1	General	18-1
18.2	Construction Materials	18-1
18.3	Construction Methods	18-2
18.4	Testing Methods	18-2
18.5	Measurement and Payment	18-2

CITY OF COLUMBIA REGULATIONS
PART 18
SPECIFICATIONS FOR ROADWAY IMPROVEMENTS MATERIALS AND CONSTRUCTION

18.1 GENERAL

18.1.1 These specifications contemplate the installation of new roadways, the resurfacing/widening of existing roadways, and appurtenant roadway work within the road right-of-way, all in the corporate limits of the City of Columbia.

18.1.2 Roadway improvements will be installed at the locations shown on the plans and to the position, alignment and grade shown thereon. In the event of conflict in the vertical grading established, resolution of the conflict shall be as directed by the City Engineer.

18.1.3 Water used for construction will be furnished by the City through approved connections to the city water system. Check valves to reduce the possibility of contamination will be furnished by the contractor when directed by the City Engineer.

18.1.4 In distributing material and equipment at the site of the work, the Contractor shall locate them so that interference with traffic and ingress/egress shall be at a minimum.

18.1.5 All materials furnished by the contractor shall be delivered and distributed at the site by the Contractor. Materials furnished by the City shall be picked up by the Contractor at points designated by the City and hauled to the work site.

18.1.6 The Contractor shall proceed with caution in excavating so that the exact location of underground structures, both known and unknown, may be determined. He shall be held responsible for the repair of such structures when broken or otherwise damaged.

18.1.7 Where there is a conflict between the General Specifications and Special Provisions, the Special Provisions shall govern.

18.1.8 Roadways identified to be resurfaced resulting from and following utility installation shall be milled prior to resurfacing unless otherwise and specifically approved by the City Engineer. This is necessary to avoid drainage problems that occur when elevations are modified due to overlays.

18.2 CONSTRUCTION MATERIALS

18.2.1 Materials used in the building of new roadways, the resurfacing and widening of existing roadways, and appurtenant roadway work will be in accordance with the South Carolina Department of Highways and Public Transportation Standard Specifications, latest edition.

18.2.2 Standard Drawings. The attached drawings #RD-1, RI-1 through RI-10, represent typical details of construction and materials to be used in the course of roadway

construction. They are meant to illustrate acceptable standards; approved equals must be submitted to the City Engineer for his approval prior to their use in the City's system.

18.2.3 Where there is a conflict between the South Carolina Department of Highways and Public Transportation Department's Standard Specifications, and the Special Provisions, the Special Provisions will govern.

18.3 CONSTRUCTION METHODS

18.3.1 Construction methods used in the building of new roadways, the resurfacing and widening of existing roadways, and appurtenant roadway work will be in accordance with the South Carolina Department of Highways and Public Transportation's Standard Specifications, latest edition.

18.3.2 Where there is a conflict between the South Carolina Department of Highways and Public Transportation's Standard Specifications and the Special Provisions, the Special Provisions shall govern.

18.4 TESTING METHODS

18.4.1 Frequency (minimum) of testing the new roadway, the resurfacing and widening of existing roadways, and appurtenant road work shall be as described in the South Carolina Department of Highways and Public Transportation's Standard Specifications, latest edition. Special Provisions may delineate additional testing.

18.4.2 The materials to be tested will be supplied by the Contractor. Personnel, tools, and equipment necessary for the Engineer or his representative to take samples will also be supplied by the Contractor.

18.4.2.1 The cost of minimum testing required by the standard specifications for highway construction will be borne by the Contractor except as specified in the Special Provisions.

18.4.3 Test locations selected will be solely at the discretion of the City Engineer, or his representative.

18.5 MEASUREMENT AND PAYMENT

18.5.1 Measurement of in place completed work shall be in accordance with the South Carolina Department of Highways and Public Transportation's Standard Specifications, latest edition.

CURB AND GUTTER DETAILS

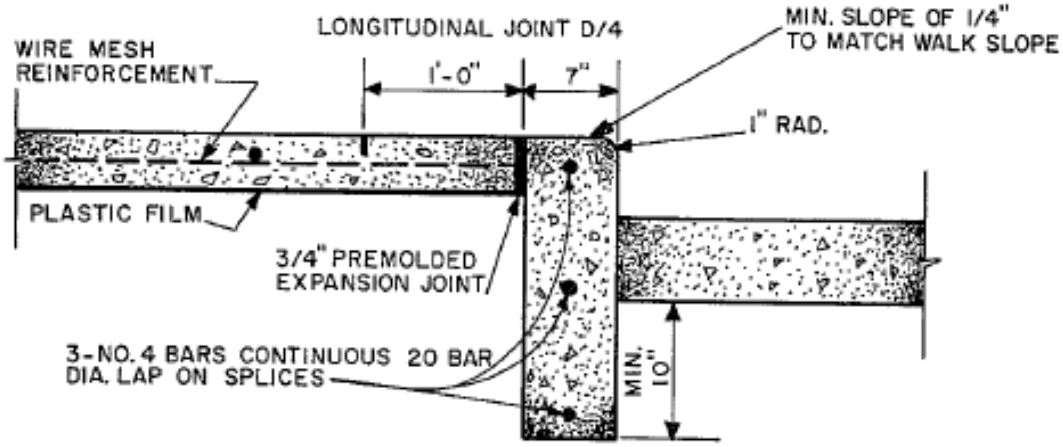

TYPE "A"

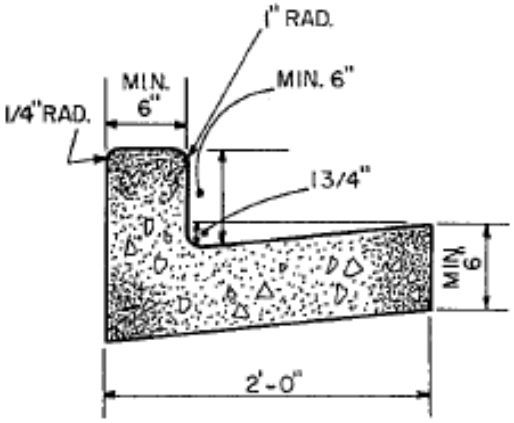

TYPE "B"

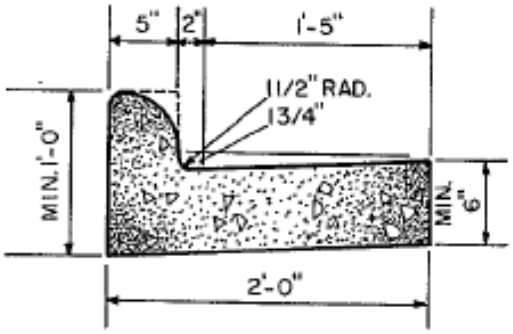

TYPE "C"

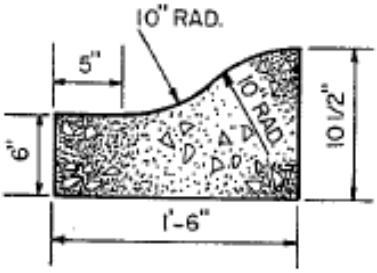

TYPE "D"

DATE: 1-16-79

COLUMBIA ENGINEERING DEPARTMENT

STANDARD DETAIL RT-1

DRIVEWAY DETAILS
(FOR EXISTING CURB OPENINGS)

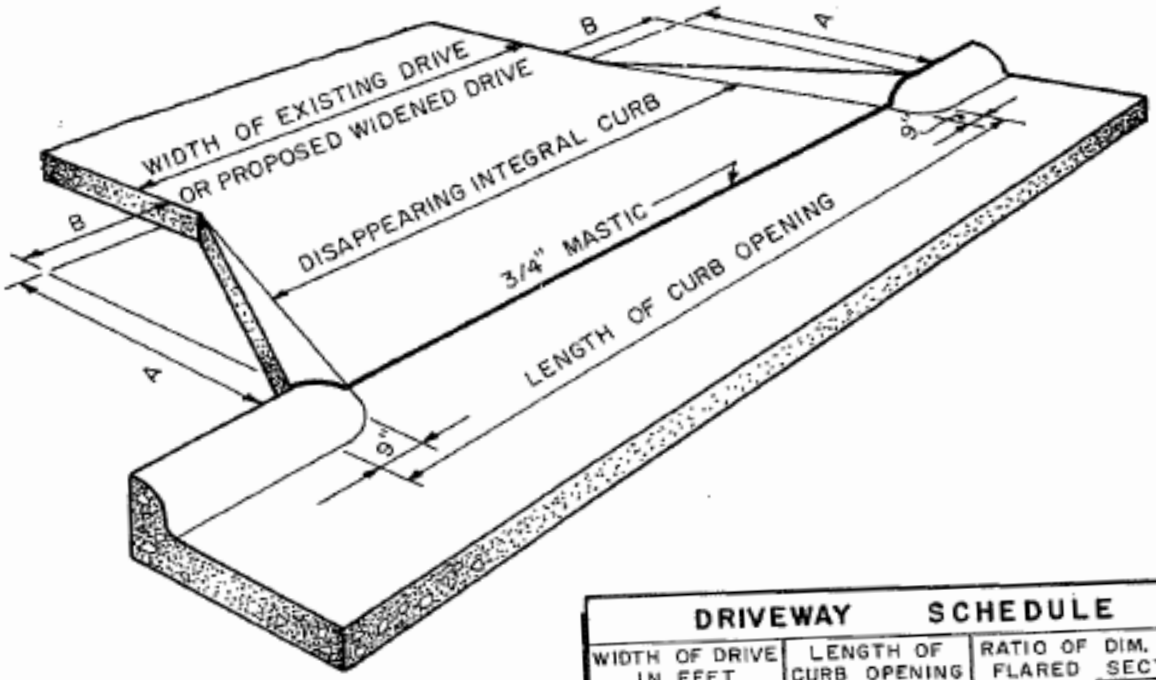

DRIVEWAY SCHEDULE

WIDTH OF DRIVE IN FEET (SEE NOTE 1)	LENGTH OF CURB OPENING IN FEET	RATIO OF FLARED DIM. FOR SECTION	A	B
8 THRU 10	16	MIN.	1	1
		MAX.	2	1
11 THRU 15	20	MIN.	1	1
		MAX.	2	1
16 THRU 20	24	MIN.	1	1
		MAX.	2	1
OVER 20	SEE CITY ENGINEER	SEE CITY ENGINEER		

COLUMBIA ENGINEERING DEPARTMENT

NOTES

1. IF PROPERTY OWNER PROPOSES TO WIDEN EXISTING DRIVE, USE EXISTING WIDTH PLUS WIDTH OF PROPOSED WIDENING TO ENTER SCHEDULE AND DETERMINE LENGTH OF CURB OPENING.
2. IN NO CASE SHALL CURB OPENING BE CONSTRUCTED BEYOND EXTENDED PROPERTY LINE OF ADJOINING PROPERTY.
3. CONSTRUCT DISAPPEARING CURB ONLY WHEN NEW DRIVE SECTION FILLS ENTIRE CURB OPENING, OTHERWISE USE A FLAT SECTION.
4. WHEN POSSIBLE, SLOPE OF NEW DRIVE SHALL NOT EXCEED 1" VERTICAL TO 7" HORIZONTAL

JAR 1-16-79

CITY ENGINEER

DATE: 1-16-79

STANDARD DETAIL RI-2

DRIVEWAY DETAILS

(WHERE CURB CUT IS REQUIRED)

RADIUS SECTION

NOTES:

1. IN NO CASE SHALL CURB OPENING BE CONSTRUCTED BEYOND EXTENDED PROPERTY LINE OF ADJOINING PROPERTY.
2. WHEN POSSIBLE, SLOPE OF NEW DRIVE SHALL NOT EXCEED 1" VERTICAL TO 7" HORIZONTAL.
3. MAINTAIN GUTTER GRADE ACROSS OPENING.
4. EDGE ALL JOINTS.

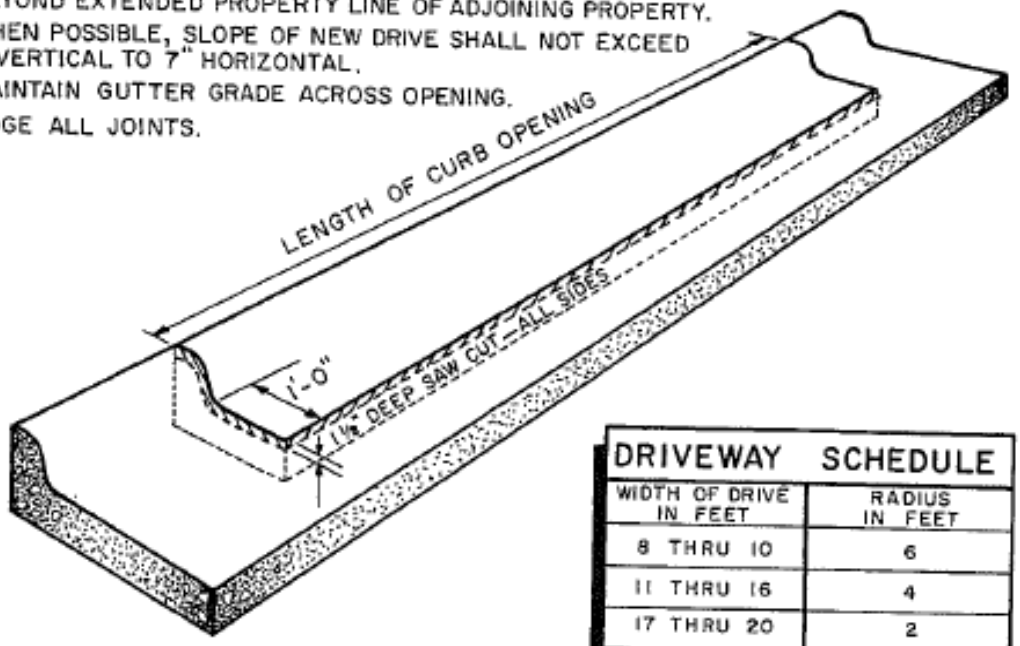

DRIVEWAY SCHEDULE	
WIDTH OF DRIVE IN FEET	RADIUS IN FEET
8 THRU 10	6
11 THRU 16	4
17 THRU 20	2
OVER 20	SEE CITY ENGINEER

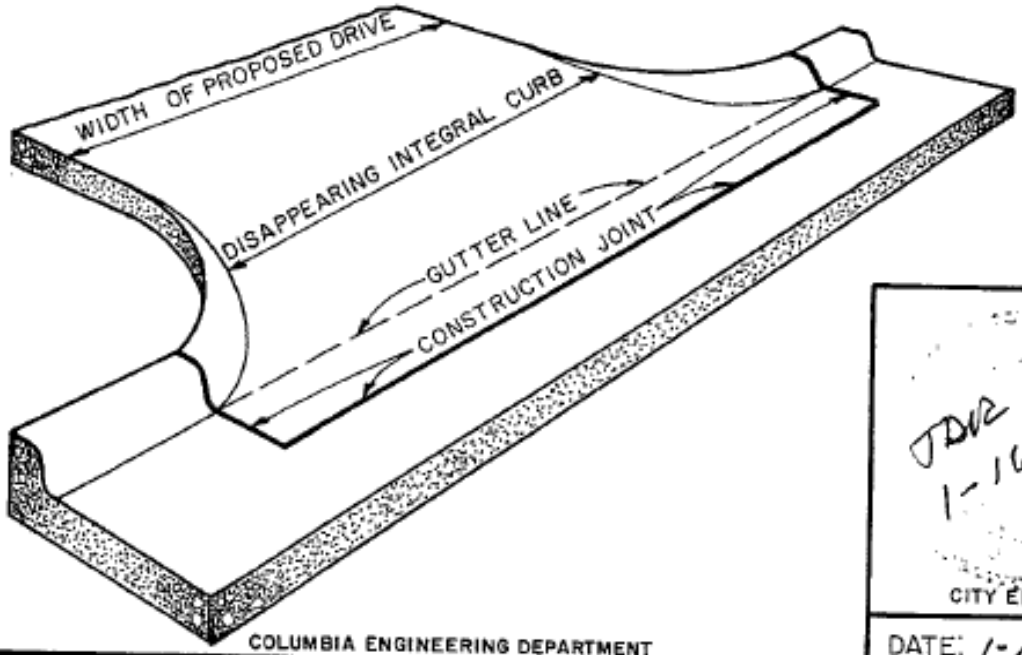

JDR 1-16-79

RICKETTS

CITY ENGINEER

COLUMBIA ENGINEERING DEPARTMENT

DATE: 1-16-79

STANDARD DETAIL RI-3

ALLEY RETURN DETAILS

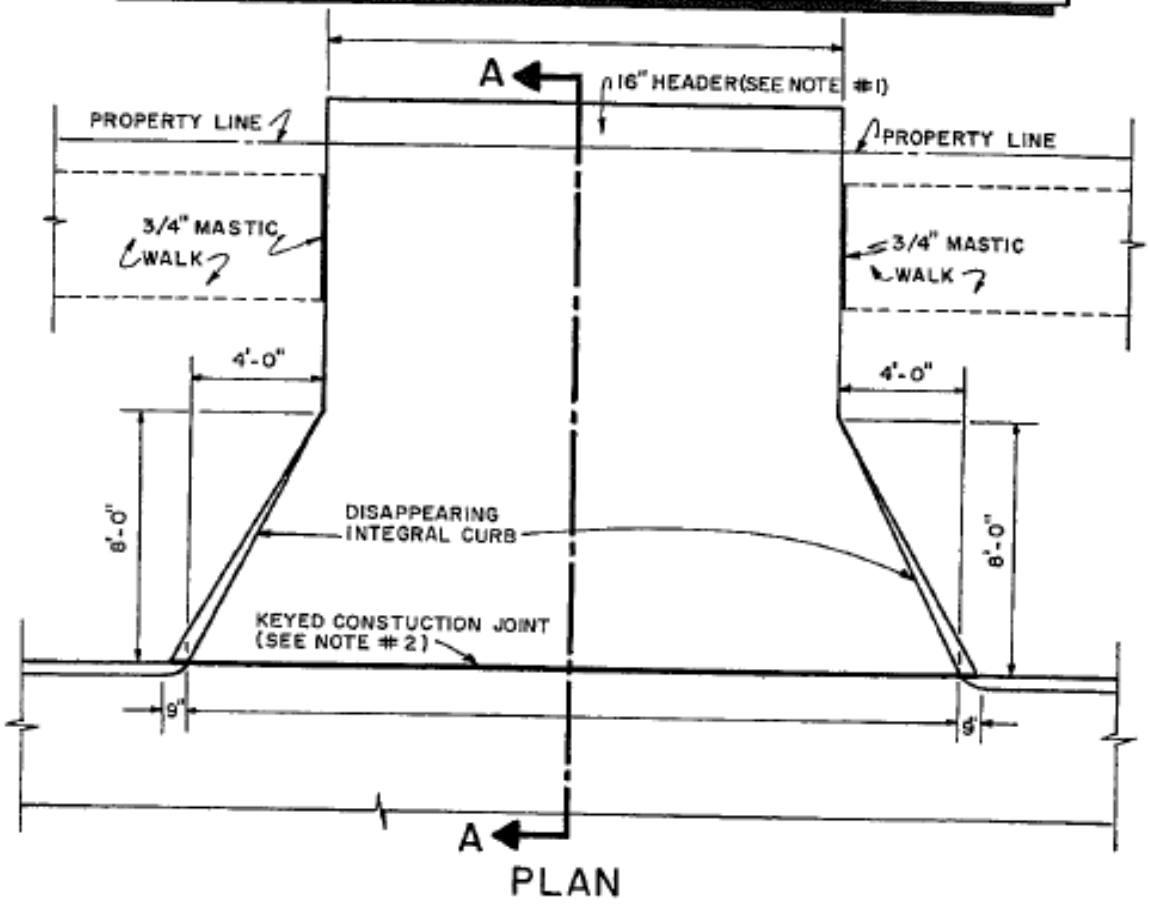

PLAN

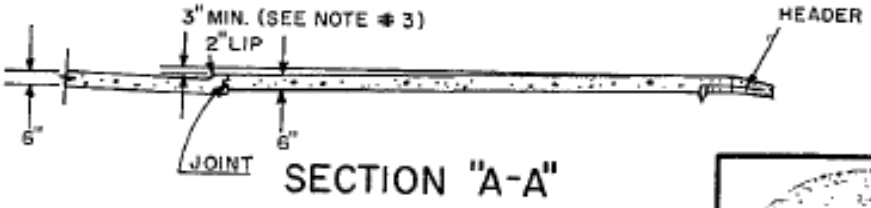

SECTION "A-A"

NOTES:

1. IF ALLEY IS NOT PAVED USE HEADER AS SHOWN ON PLAN. IF ALLEY IS PAVED AT A LATER DATE, REMOVE HEADER AND INSERT 3/4" MASTIC BETWEEN RETURN AND NEW PAVING. IF ALLEY IS ALREADY PAVED INSERT 3/4" MASTIC BETWEEN RETURN AND OLD PAVING.
2. IF ALLEY RETURN IS NOT POURED, DROP CURB AND USE KEYED CONSTRUCTION JOINT, UNLESS OTHERWISE NOTED ON PLANS.
3. A MIN. SLOPE OF 3" TO BE MAINTAINED FROM PROPERTY LINE TO LIP OF DROPPED CURB.

COLUMBIA ENGINEERING DEPARTMENT

JAR 1-16-79 RICKETTS

CITY ENGINEER

DATE: 1-16-79

STANDARD DETAIL RI-4

PAVEMENT JOINT DETAILS

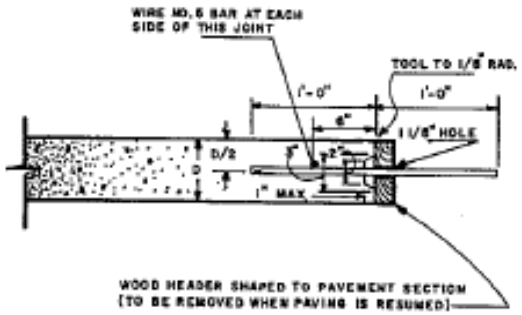

DAYS WORK OR EMERGENCY JOINT

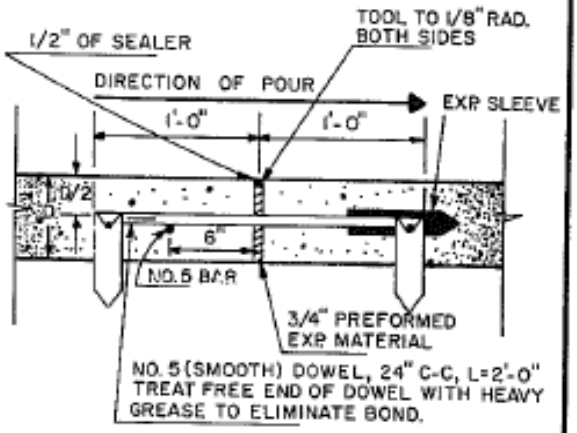

EXPANSION JOINT

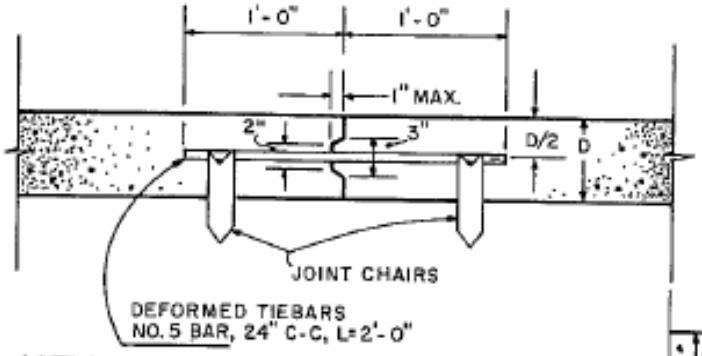

KEY AND DOWELLED JOINT

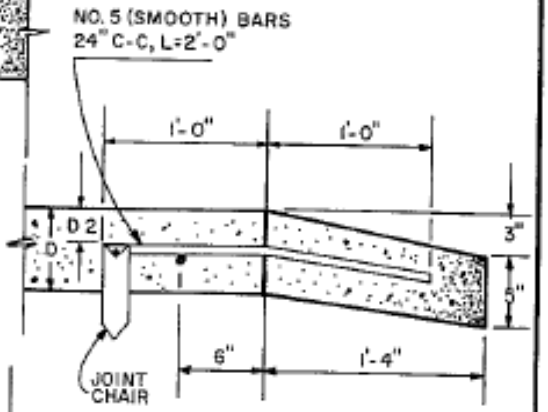

HEADER DETAIL

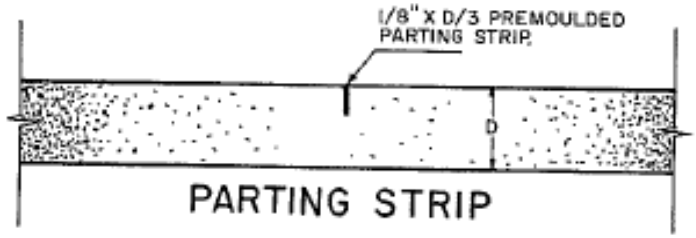

PARTING STRIP

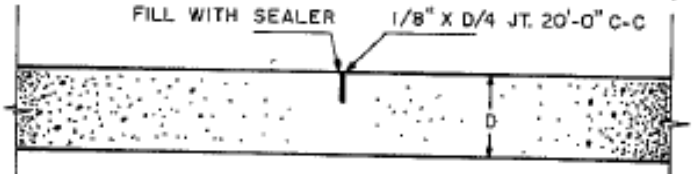

SAWED CONTRACTION JOINT

JAR 1-16-79

CITY ENGINEER

DATE: 1-16-79

COLUMBIA ENGINEERING DEPARTMENT

STANDARD DETAIL RI-5

℄ JOINT FOR FULL WIDTH POUR

(USE K. & D. JOINT FOR 1/2 WIDTH POUR)

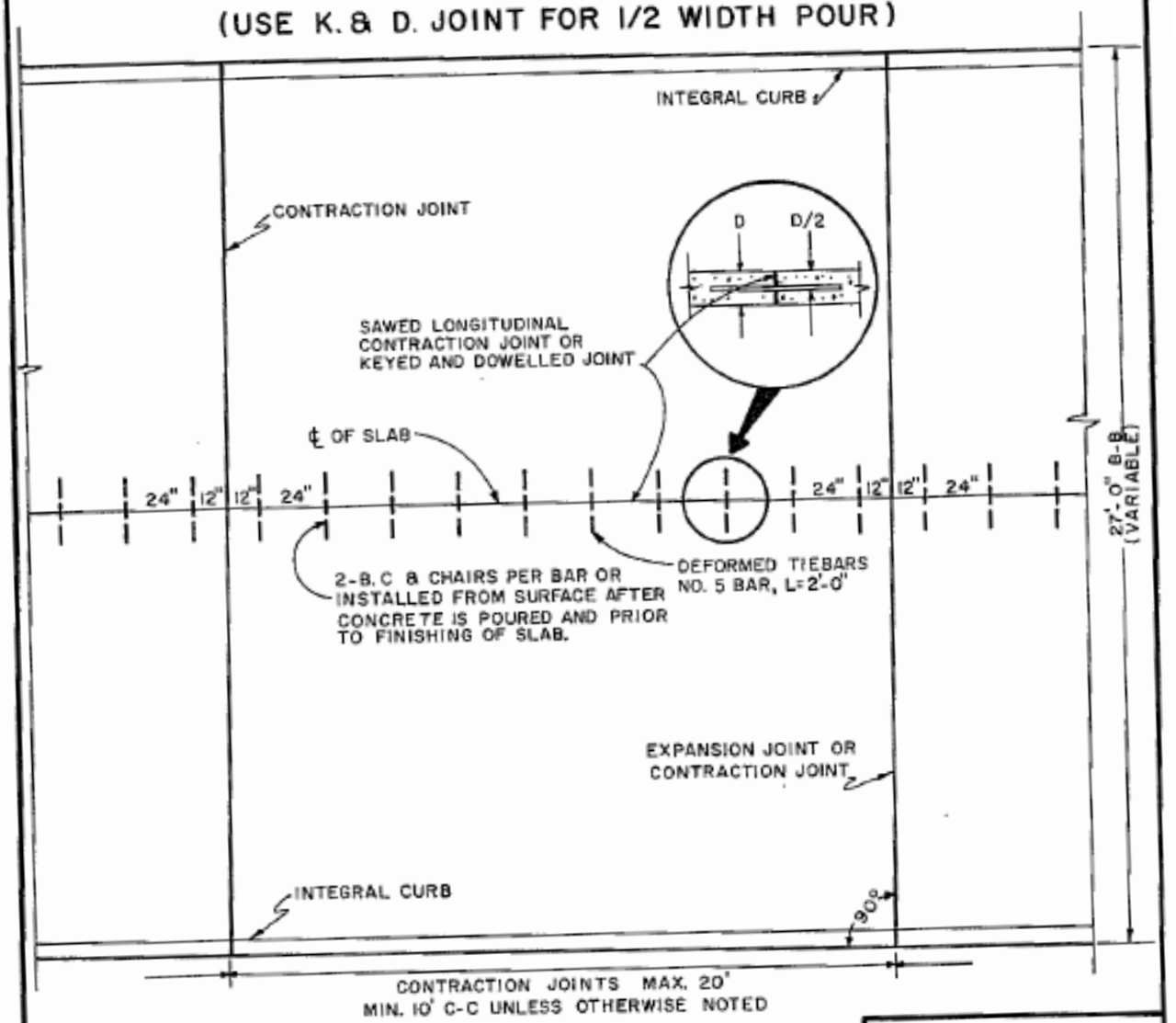

NOTE:
FOR PAVING WIDTH IN EXCESS OF 27'-0" SEE PLANS FOR SPACING AND TYPES OF LONGITUDINAL.

JAR 1-16-79

CITY ENGINEER

DATE: 1-16-79

COLUMBIA ENGINEERING DEPARTMENT

STANDARD DETAIL RI-6

STANDARD ALLEY DROP INLET

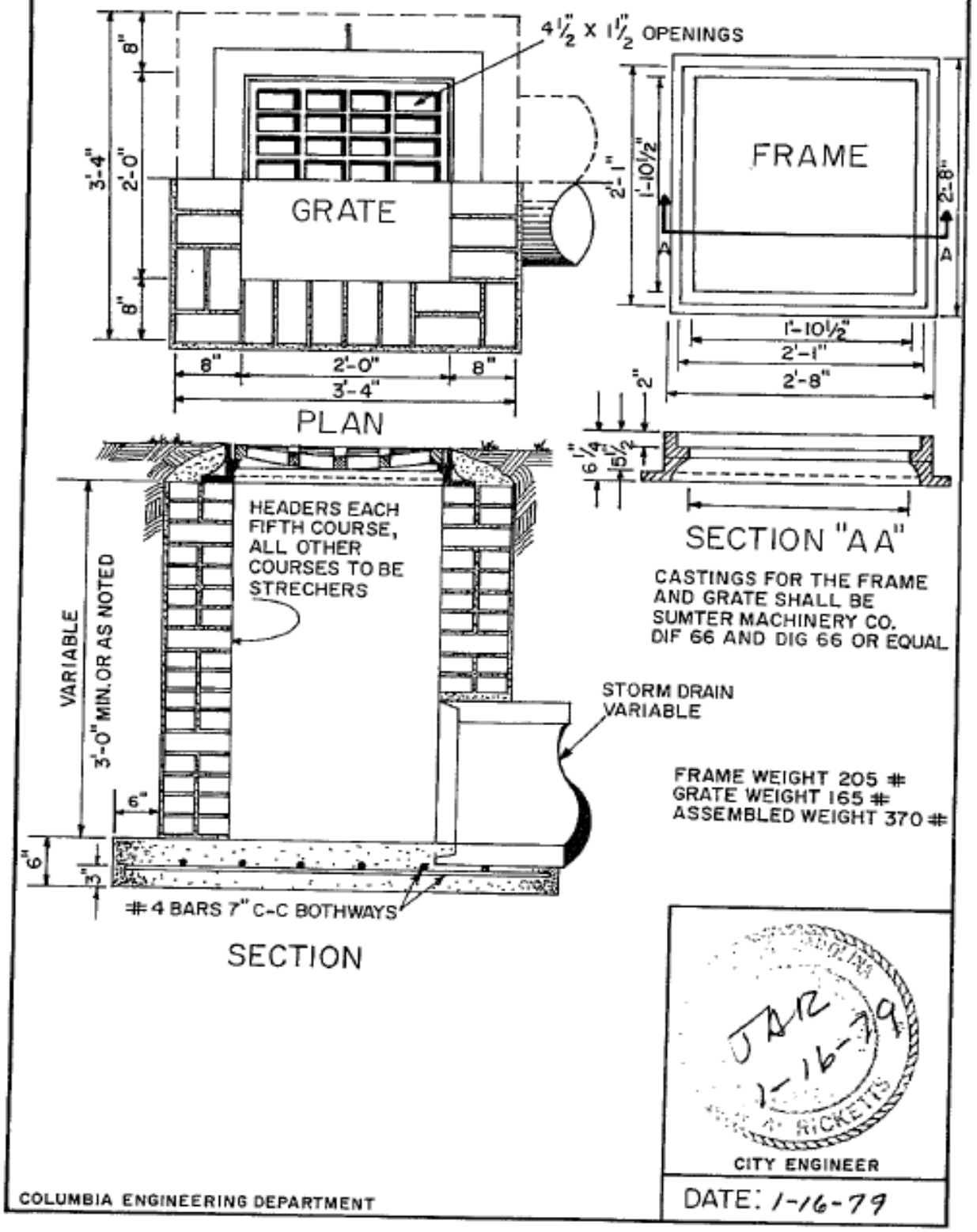

STANDARD DETAIL RI-7

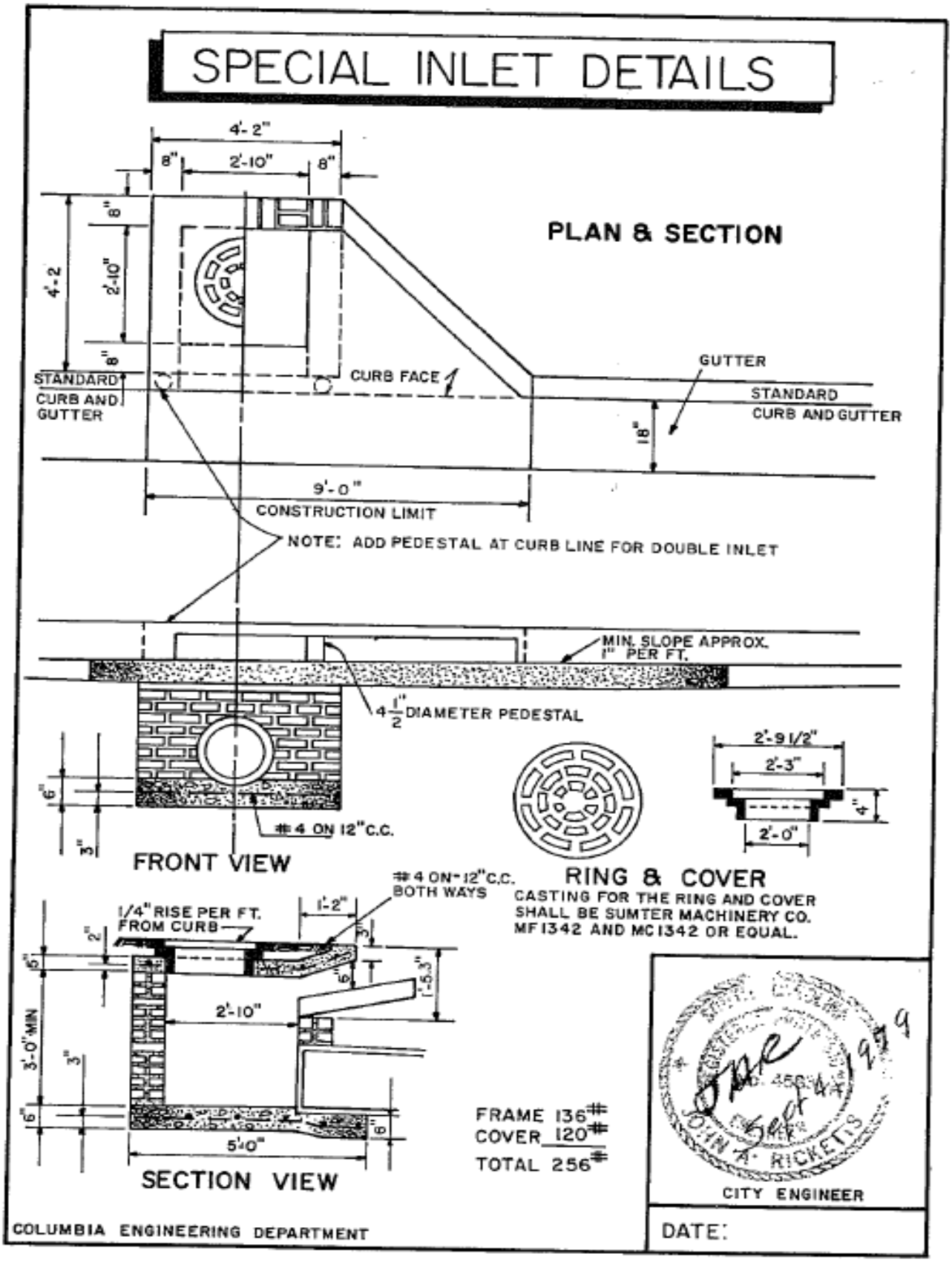

STANDARD DETAIL RI-8 (REVISED)

STANDARD ROUND TOP INLET

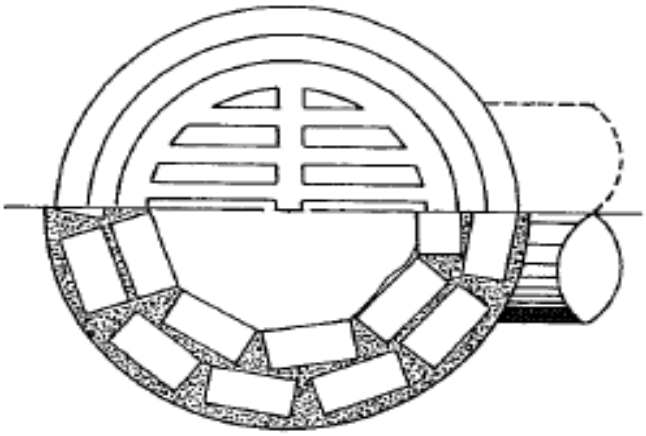

PLAN & SECTION

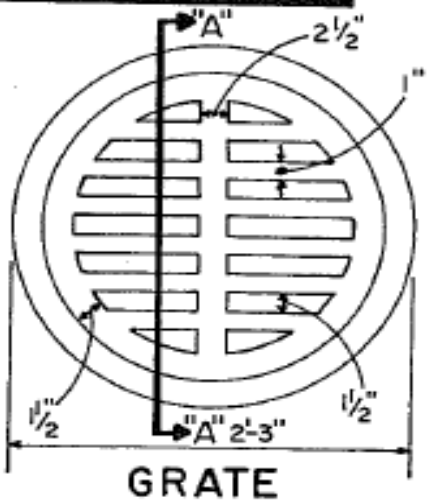

GRATE

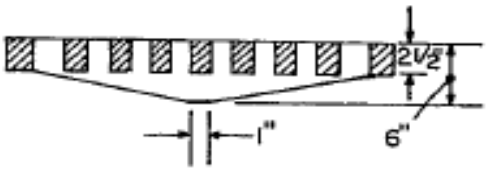

SECTION "AA"

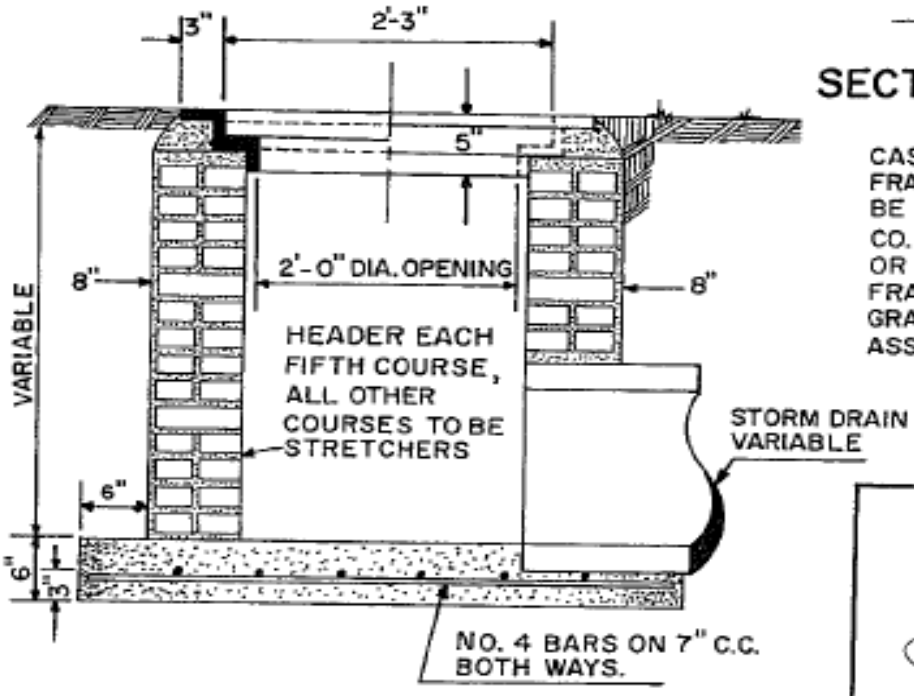

CASTINGS FOR THE FRAME AND GRATE TO BE SUMTER MACHINERY CO. MF-23 AND MG-23 OR EQUAL
FRAME WEIGHT 215 #
GRATE WEIGHT 240 #
ASSEMBLED WEIGHT 455 #

JPR 1-16-79
RICKETTS
CITY ENGINEER

COLUMBIA ENGINEERING DEPARTMENT

DATE: 1-16-79

STANDARD DETAIL RI-9

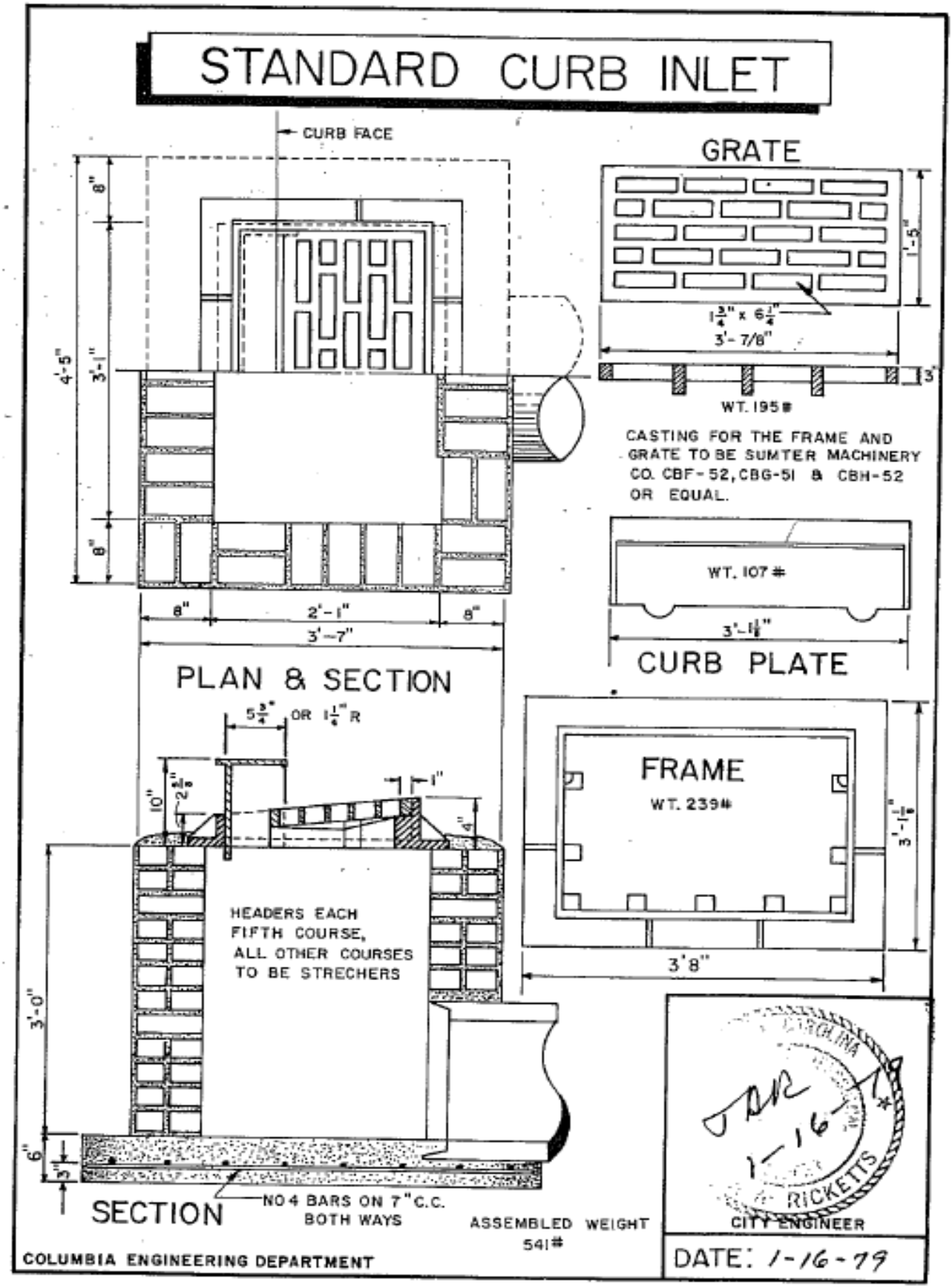

STANDARD DETAIL RI-10

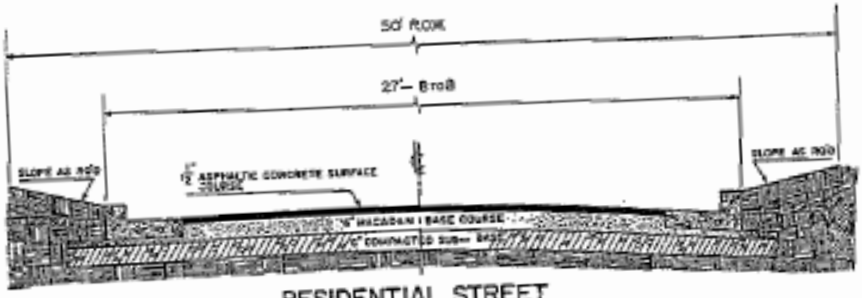

RESIDENTIAL STREET

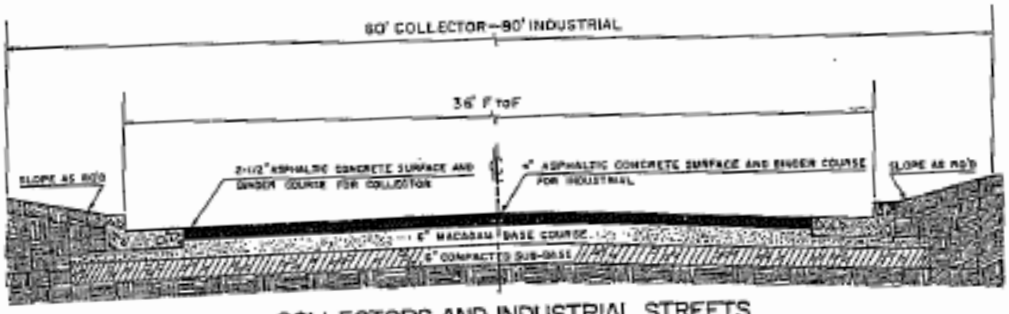

COLLECTORS AND INDUSTRIAL STREETS

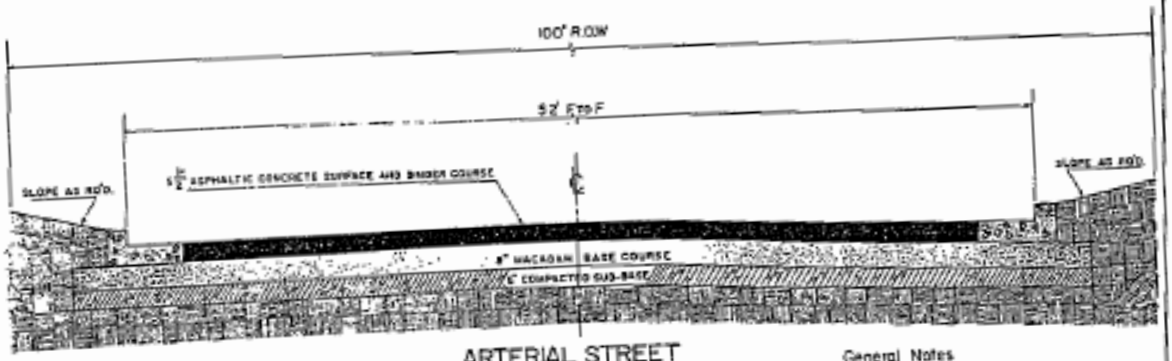

ARTERIAL STREET

EQUIVALENT THICKNESS REQUIRED TO MAKE ONE INCH OF HOT LAID ASPHALTIC CONCRETE(2)	
HOT LAID ASPHALTIC CONCRETE SURFACE	1.00
HOT LAID ASPHALTIC CONCRETE BINDER	1.00
BITUMINOUS SURFACING	1.00
EARTH TYPE BASE (CRD SURF MTL)	4.0
EARTH TYPE BASE (PIT MTL)	3.5
MACADAM BASE	3.0
CEMENT STABILIZED EARTH BASE	2.0
HOT LAID SAND ASPHALT BASE	1.5
STABILIZED AGGREGATE BASE	1.75
HOT LAID ASPHALT AGGREGATE BASE	1.25
CEMENT STABILIZED AGGREGATE BASE	1.0
OLD PCC PAVEMENT	1.10
EARTH TYPE SUB-BASE (CRD SURF MTL)	5.0
EARTH TYPE SUB-BASE (PIT MTL)	4.0
SOIL AGGREGATE SUB-BASE	4.0
CEMENT STABILIZED EARTH SUB-BASE	2.5

OLD SURFACING	
OLD ASPHALTIC CONCRETE SURFACE	2.0
OLD ASPHALTIC CONCRETE BINDER	1.0
OLD SAND ASPHALT	1.5
BITUMINOUS SURFACING	1.5
OTHER, 80% OF THE ORIGINAL VALUE	
OLD BASES	
70% OF THE ORIGINAL VALUE	
OLD SUB-BASES	
80% OF THE ORIGINAL VALUE	

General Notes

1. THE ABOVE SECTIONS INDICATE MINIMUM REQUIREMENTS.
2. MATERIALS OF EQUAL STRENGTH, IN THEIR RESPECTIVE THICKNESSES REQUIRED MAY BE SUBSTITUTED IN LIEU OF THE MINIMUM. SEE THE ROAD DESIGN STANDARDS, CITY OF COLUMBIA, FOR THE PROCEDURE.
3. CONSTRUCTION OF ROAD SECTIONS TO BE IN ACCORDANCE WITH THE ROAD CONSTRUCTION SPECIFICATIONS.
4. THESE SECTIONS APPLY TO FLEXIBLE PAVEMENT.
5. BARRIER OR ROLL TYPE CURBING IS ACCEPTABLE.

CITY OF COLUMBIA
DEPARTMENT OF ENGINEERING
COLUMBIA, SOUTH CAROLINA

SCALE: NONE
DATE: AUG. 19, 1977
DRAWN BY: J.C. HERRIN
REVISED
DESIGN ENGINEER

STANDARD ROAD SECTIONS

DRAWING NUMBER

RD-1

PART 19: SPECIFICATION FOR FENCING MATERIALS
TABLE OF CONTENTS

Paragraph	Description	Page No.
19.1	General	19-1
19.2	Construction Materials	19-1

CITY OF COLUMBIA REGULATIONS
PART 19
SPECIFICATIONS FOR FENCING MATERIALS

19.1 GENERAL. These specifications cover materials and installation requirements for chain link fence with gates and other appurtenances.

19.1.1 The Contractor shall furnish the City Engineer with shop drawings of fencing, gates, etc. for his approval.

19.1.2 The Contractor shall do all necessary clearing, grubbing and grading along the line of work and shall furnish all materials and all labor for the installation of the fencing.

19.1.3 Upon completion of the work, the Contractor will be required to dispose of all surplus materials and rubbish and to restore all property which has been damaged in the course of work.

19.1.4 The fence is to be erected along the lines established by the City Engineer and the bottom of the fabric is to be held as uniformly as practicable two (2") inches above finish grade.

19.2 CONSTRUCTION MATERIALS

19.2.1 Fabric

19.2.1.1 Fabric shall be woven to a height and of a gauge called out in the Special Provisions.

19.2.1.2 Fabric shall be woven in a two (2") inch mesh from steel wire. Fabric shall be hot-dip galvanized after weaving with heavy zinc coating. Top and bottom salvages have a twisted and barbed finish; barbing to be done by cutting wire on a bias.

19.2.1.3 Tensile Strength: Wire of which the fabric is made shall have a minimum tensile strength of 80,000 pounds per square inch.

19.2.1.4 Galvanizing Test: The City of Columbia, acting through its Engineer, reserves the right to test the fabric used. Test to be in accordance with ASTM A90-69 or latest revision. This test to be made at Contractor's expense.

19.2.2 Barbed Wire: Barbed wire shall be of the four point pattern composed of two strands of 12 gauge steel wire with 14 gauge barbs spaced on five (5") inch centers. Barbed wire to be galvanized after weaving or galvanized before weaving when using aluminum barbs.

19.2.3 Line Posts: Use hot-dip galvanize 2 3/8" O.D. steel pipe weighing a minimum of 3.65 pounds per lineal foot. No used, rerolled or open seam material will be permitted in posts or rails.

19.2.4 Terminal Posts: End, corner and pull posts shall be hot-dip galvanized steel pipe 3" O.D. – 5.79 pounds per lineal foot. Gate posts shall be hot-dip galvanized steel pipe in accordance with the following tabulations:

GATE FRAME	GATE OPENING	GATE POST	MINIMUM WEIGHT PER LIN. FT.
2" O.D.	Single to 6' or Double to 12'Incl	3" O.D.	5.79
2" O.D.	Single Over 6' to 13; or Double Over 12' to 26' Incl.	4" O.D.	9.11
2" O.D.	Single Over 13' to 18' or Double Over 26' to 36' Incl.	6-5/8" O.D.	18.97
2" O.D.	Single Over 18' or Double Over 36'	8-5/8" O.D.	24.70

19.2.5 Post Spacing: Posts to be spaced in line of fence not farther apart than 10 ft. centers.

19.2.6 Post Setting: All posts to be set plumb and to be set in concrete footings of proper size and shape as shown in Standard Details FC #3 and FC #4 to furnish a foundation and support sufficient to withstand any strain or shock ordinarily brought to bear on a fence of this character. A liberal factor of safety is to be provided.

19.2.7 Extension Arms: Line post arms shall be of pressed steel, end and corner post arms of malleable iron or pressed steel: gate posts to have ball top. Each arm to carry three barbed wires at an angle of 45 degrees; the top most barbed wire approximately 12 inches above the fabric and approximately 12 inches from fence line as shown in Standard Details FC #6 and FC #7. Barbed wires to be securely fastened in slots by heavy wire pins. Arms having projection to be bent down over barbed wires may not be used. All components shall be hot-dip galvanized.

19.2.8 Top and Bottom Rail (Standard Detail FC #2): Shall be hot-dip galvanized steel pipe 1 5/8" O.D., or "H" Section, weight 2.27 lbs. per lineal foot; provided with couplings approximately every 20 feet. Couplings are to be outside sleeve type and at least 7 inches long; one coupling in every five to have a heavy spring to take up expansion and contraction. Top rail to pass through base of line post tops and form a continuous brace from end to end of each stretch of fence. Top and bottom rail to be securely fastened to terminal posts by pressed steel connections.

19.2.9 Braces (Standard Detail FC #1): Shall be hot-dip galvanized. Brace material to be same as top rail. To be spaced midway between top rail and bottom rail and to extend from terminal post to first adjacent line post, and from gate post to first

adjacent line post. Braces are to be securely fastened to posts by suitable pressed steel connections, then trussed from line post back to terminal post with 3/8" round rod.

19.2.10 Fittings: Shall be hot-dip galvanized. All fittings are to be malleable cast iron, or pressed steel.

19.2.11 Fabric Bands: Fabric is to be fastened to line posts with aluminum fabric bands spaced approximately 16 inches (to handle 8' fence) apart, and to top rail with tie wires spaced approximately 24 inches apart.

19.2.12 Gates (Standard Drawings FC #3, FC #4 and FC #5): Gate frames shall be constructed of 2" minimum outside diameter standard pipe, nominal weight 2.72 pounds per foot, hot-dip galvanized steel pipe, securely welded. Fabric to match the fence shall be installed in the frame by means of tension bars with hook bolts. Each frame shall be provided with 3/8" diameter adjustable truss rods. Bottom hinge to be heavy malleable iron ball and socket type designed to carry the weight of the gate. Upper hinge to be wrap around type with malleable base and pressed steel strap. Each gate to be equipped with positive type latching device with provision for padlocking. All gates to be provided with center plunger rod catch and semi-automatic outer catches to secure gates in opened position. Gate size shall be as called out in the Special Provisions.

STANDARD DESIGN FOR FENCING

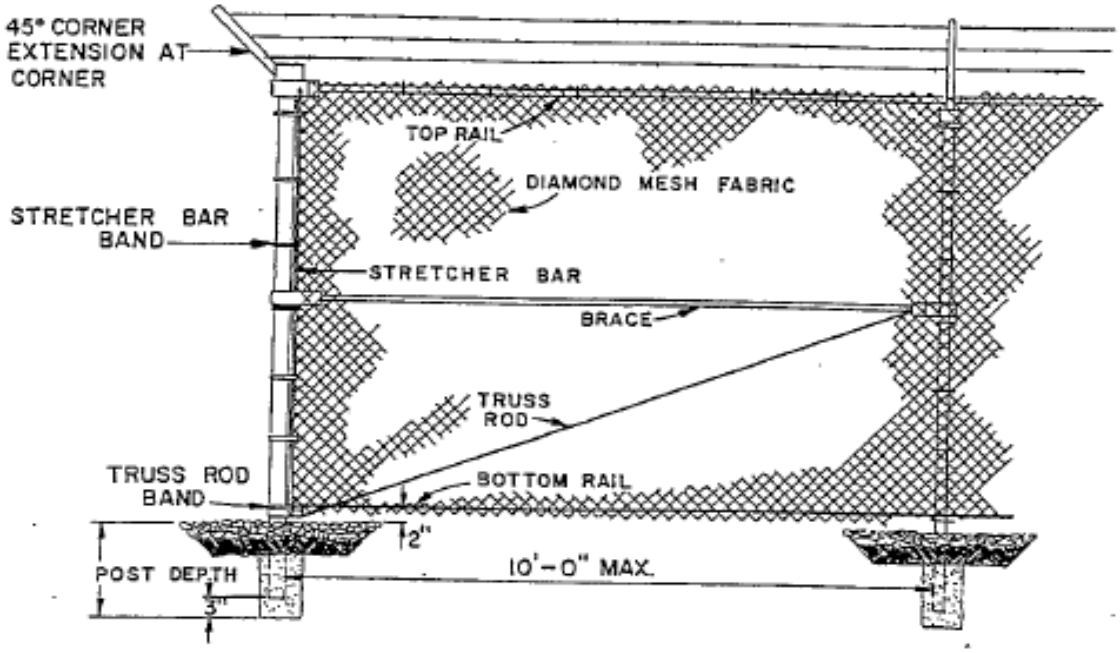

TYPICAL FENCE CORNER

NOTES: SEE F.C. #4 FOR FOOTING DEPTH, DIAMETER

SOUTH CAROLINA PROFESSIONAL ENGINEER No. 5583 JOHN F. RICKETTS

CITY ENGINEER

COLUMBIA ENGINEERING DEPARTMENT

REVISED DETAIL NUMBERS	DRAWN BY – JH	APPROVED BY JFR	DATE: 5-5-78
	DATE 10/18/78	DATE 10-24-78	

STANDARD DETAIL F.C. # 1

STANDARD DESIGN FOR FENCING

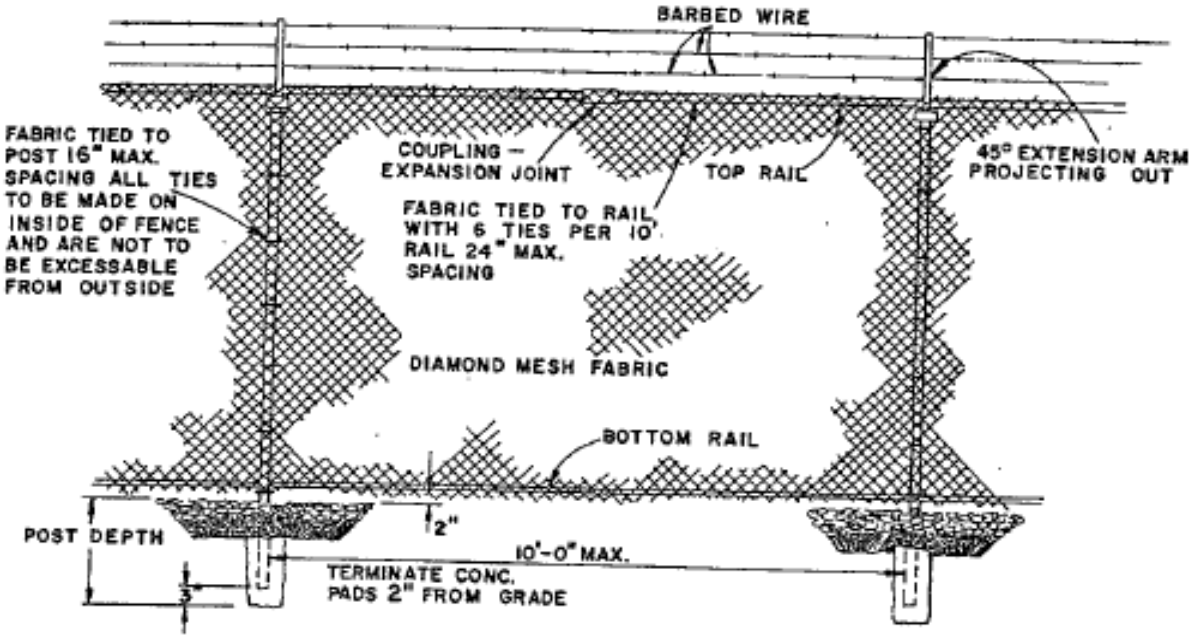

TYPICAL FENCE LINE SPAN

NOTES: SEE F.C. # 4 FOR FOOTING DEPTH, DIAMETER

COLUMBIA ENGINEERING DEPARTMENT

REVISED DETAIL NUMBERS	DRAWN BY- JH	APPROVED BY JDR
	DATE 10/18/78	DATE 10-24-78
DELETED" FROM 6 TIES PER 10' RAIL	DRAWN BY- DJ	APPROVED BY JDR
	DATE 7/28/78	DATE 8-2-78

CITY ENGINEER

DATE: 5-5-78

STANDARD DETAIL F.C. # 2

STANDARD DESIGN FOR FENCING

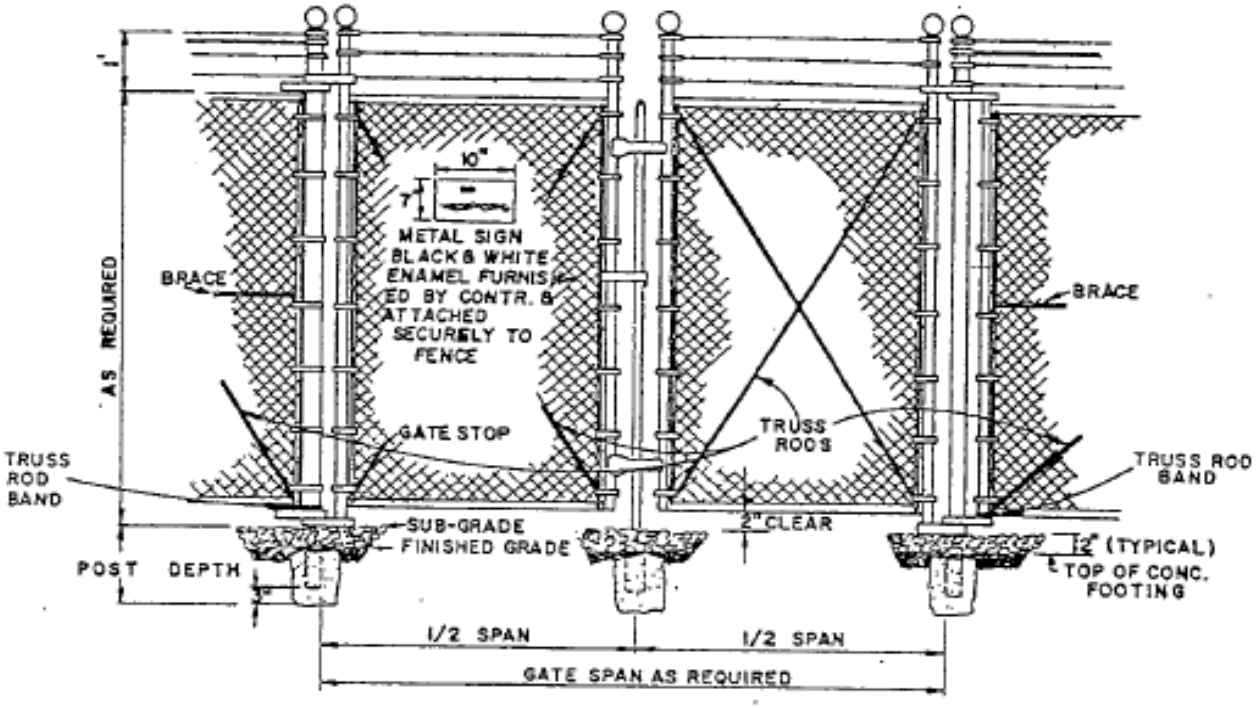

TYPICAL DOUBLE SWING DRIVE GATE

NOTES: SEE F.C. # 4 FOR FOOTING DEPTH, DIAMETER

COLUMBIA ENGINEERING DEPARTMENT

REVISED DETAIL NUMBERS	DRAWN BY-JH	APPROVED BY JAR
	DATE 10/18/78	DATE 10-24-78
ADDED TRUSS ROD & BANDS TO GATE POST	DRAWN BY- DJ	APPROVED BY JAR
	DATE 7/28/78	DATE 8-2-78

CITY ENGINEER

DATE: 5-5-78

STANDARD DETAIL F.C. # 3

STANDARD DESIGN FOR FENCING

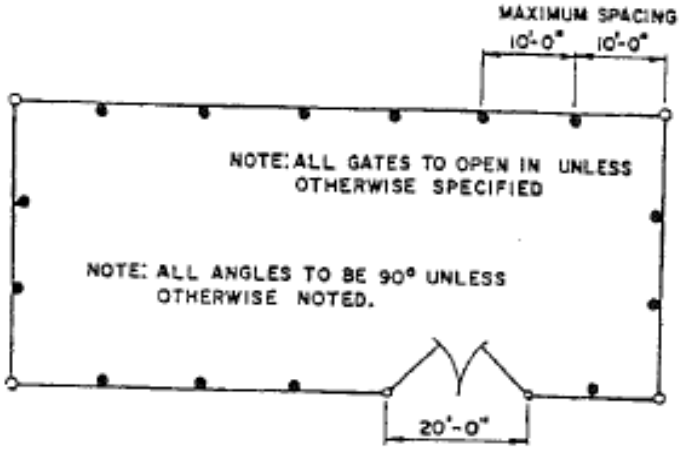

TYPICAL FENCE LAYOUT PLAN

NAME OF PART	PIPE SIZE NOM. O.D.	POST DEPTH IN FOOTING	MINIMUM FOOTING DIMENSIONS		
			TOP DIA.	BOTTOM DIA.	FOOTING DEPTH
LINE POST	2-1/2	3'-0	0'-10	1'-2	3'-3
END AND ANGLE POST	3	3'-0	1'-0	1'-4	3'-3
DOUBLE GATE POST, WIDTH OVER 12' TO 26'	4	4'-0	1'-4	2'-0	4'-3
GATE PLUNGER STOP(OR CATCH)			0'-10	1'-2	3'-0
GATE KEEPER			0'-7	0'-10	3'-0
GATE FRAME	2				
TOP BOTTOM RAIL	1-5/8				
BRACE	1-5/8				
TENSION WIRE	#7 GAUGE				

NOTES.
1. ALL DIMENSIONS ARE IN INCHES EXCEPT AS NOTED.

COLUMBIA ENGINEERING DEPARTMENT

REVISED DETAIL NUMBERS	DRAWN BY - J H	APPROVED BY JAR
	DATE - 10/18/78	DATE 10-24-78
ADDITION OF TENSION WIRE	DRAWN BY - D. JONES	APPROVED BY: JAR
	DATE - JUNE 15, 1978	DATE 6-15-78

SOUTH CAROLINA REGISTERED PROFESSIONAL ENGINEER No. 5

CITY ENGINEER

DATE: 5-5-78

STANDARD DETAIL EC. # 4

STANDARD DESIGN FOR FENCING

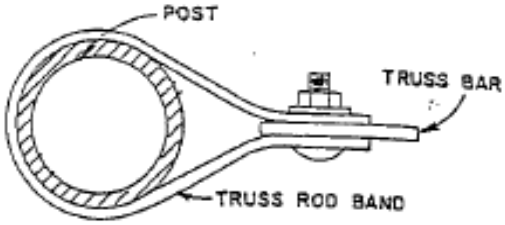

TYPICAL TRUSS ROD BAND

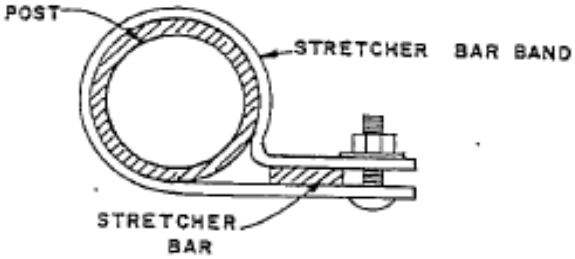

TYPICAL STRETCHER BAR BAND

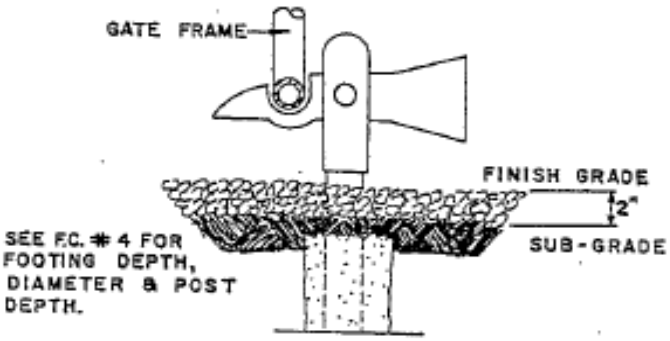

TYPICAL GATE KEEPER

SOUTH CAROLINA PROFESSIONAL ENGINEER No. 4683 JOHN A. RICKETTS

CITY ENGINEER

COLUMBIA ENGINEERING DEPARTMENT

REVISED DETAIL NUMBERS	DRAWN BY-J H	APPROVED BY JRR
	DATE 10/18/78	DATE 10-24-78

DATE: 5-5-78

STANDARD DETAIL F.C. # 5

STANDARD DESIGN FOR FENCING

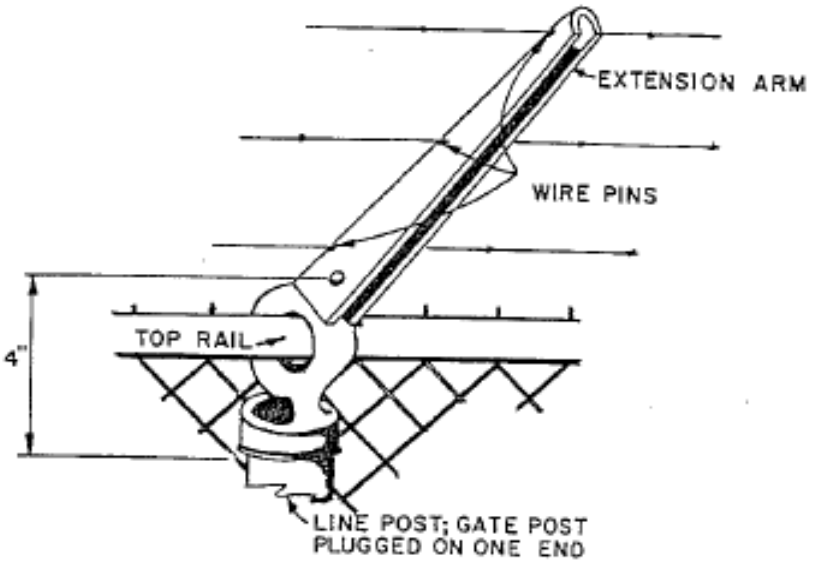

TYPICAL EXTENSION ARM
GATE, END, & LINE POSTS

JDR
8-2-78

CITY ENGINEER

COLUMBIA ENGINEERING DEPARTMENT

REVISED DETAIL NUMBERS	DRAWN BY-JH	APPROVED BY JDR	DATE: 8-2-78
	DATE 10/18/78	DATE 10-24-78	

STANDARD DETAIL F.C. # 6

STANDARD DESIGN FOR FENCING

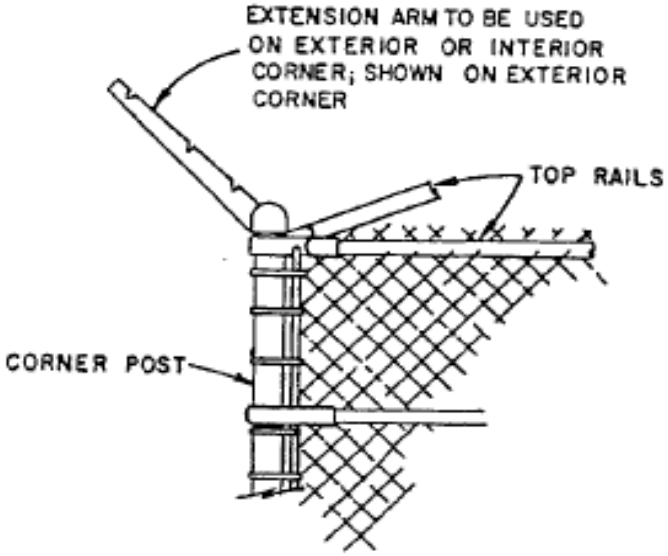

TYPICAL EXTENSION ARM
CORNER & ANGLE POSTS

SOUTH CAROLINA REGISTERED PROFESSIONAL ENGINEER JOHN A. RICKETTS

CITY ENGINEER

COLUMBIA ENGINEERING DEPARTMENT

REVISED DETAIL NUMBERS	DRAWN BY - JH	APPROVED BY JAR
	DATE 10/18/78	DATE 10-24-78

DATE: 8-2-78

STANDARD DETAIL EC. # 7

STANDARD DESIGN FOR FENCING

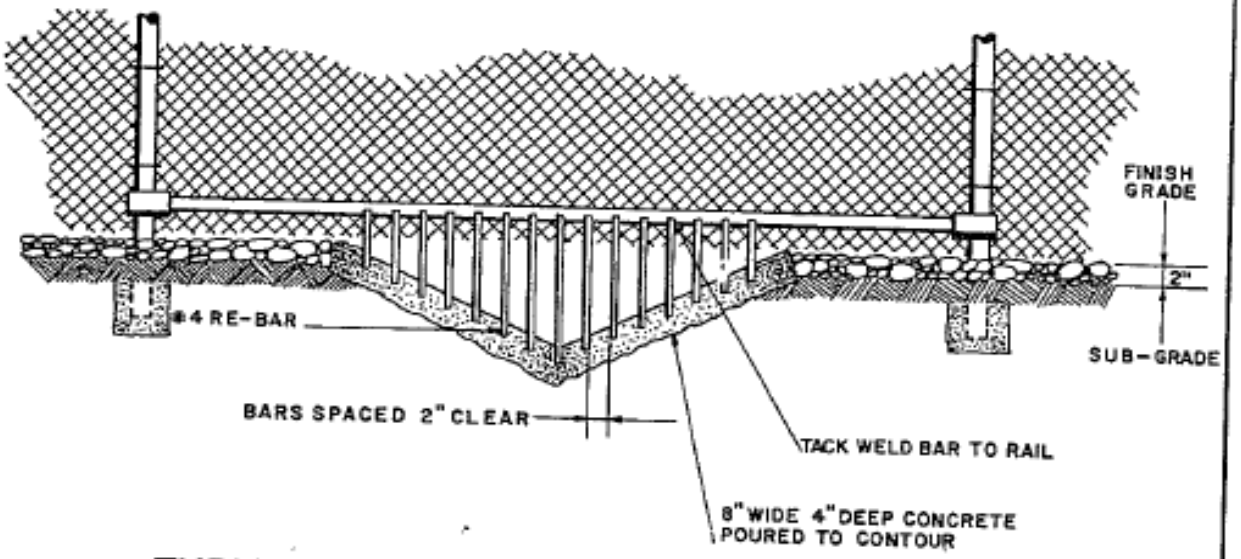

TYPICAL GUARD FOR SWALE

SOUTH CAROLINA REGISTERED PROFESSIONAL ENGINEER No. 4583 JOHN A. RICKETTS

CITY ENGINEER

COLUMBIA ENGINEERING DEPARTMENT

DATE: 10-25-78

STANDARD DETAIL EC. # 8

STANDARD DESIGN FOR FENCING

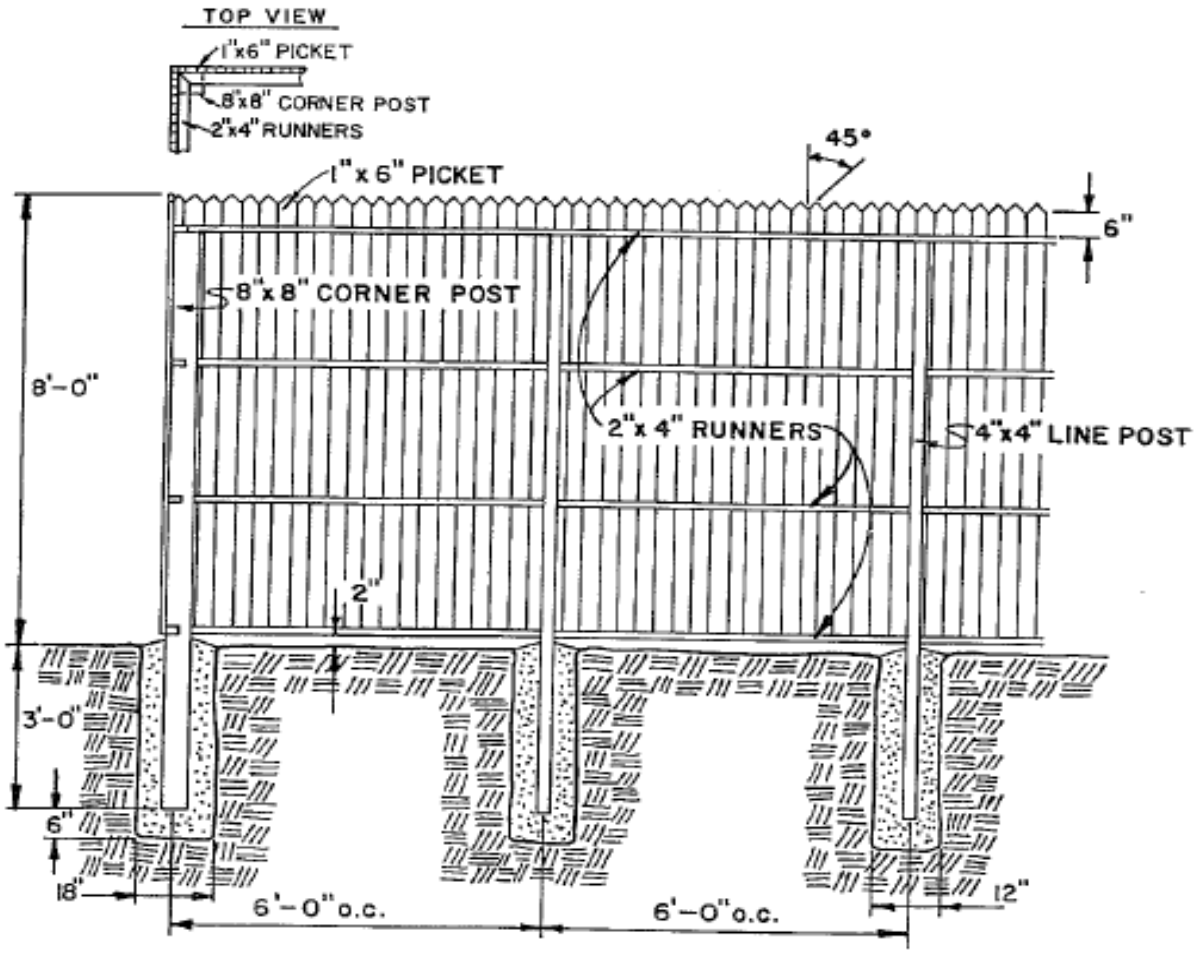

TYPICAL FENCE CORNER

SOUTH CAROLINA REGISTERED PROFESSIONAL ENGINEER

CITY ENGINEER

DEPARTMENT OF UTILITIES AND ENGINEERING

DATE: 2-24-87

STANDARD DETAIL F.C. # 9

STANDARD DESIGN FOR FENCING

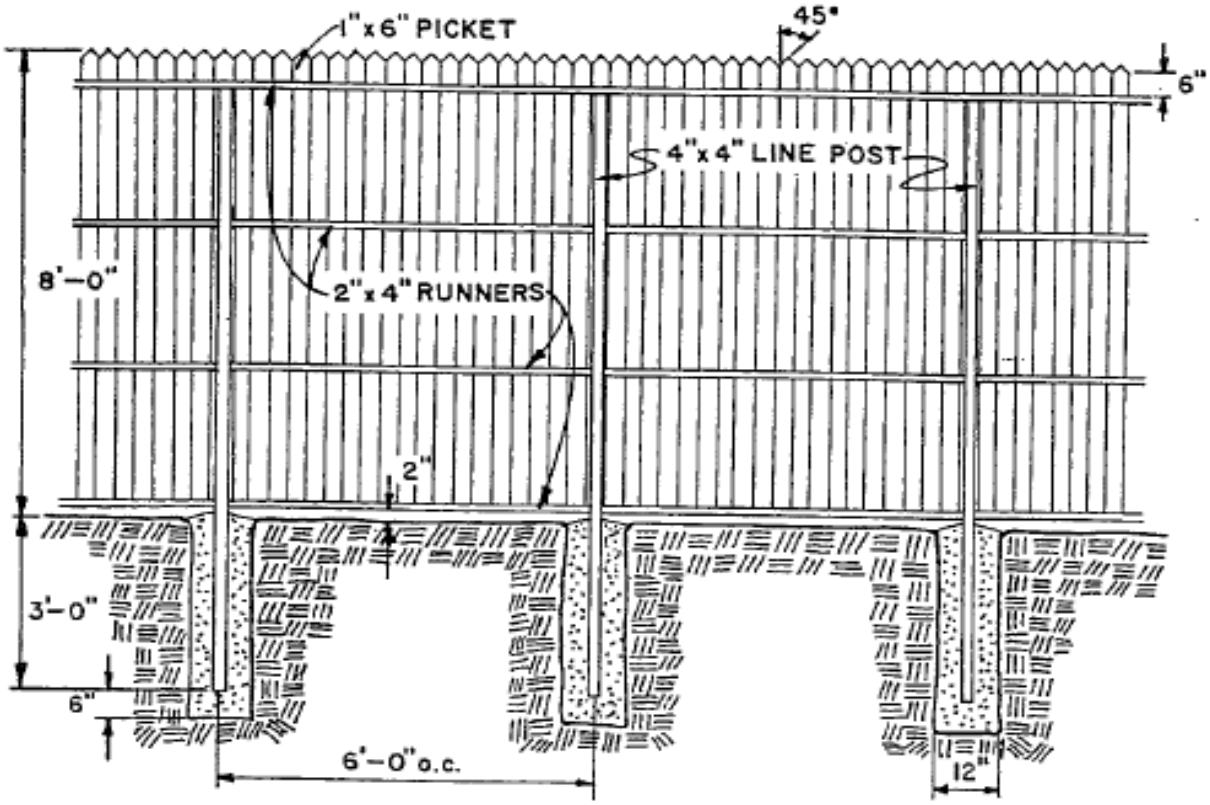

TYPICAL FENCE LINE SPAN

SOUTH CAROLINA REGISTERED PROFESSIONAL ENGINEER No. 10098 DAVID A. JOHNSON

CITY ENGINEER

DEPARTMENT OF UTILITIES AND ENGINEERING

DATE: 2-24-87

STANDARD DETAIL F.C. # 10

STANDARD DESIGN FOR FENCING

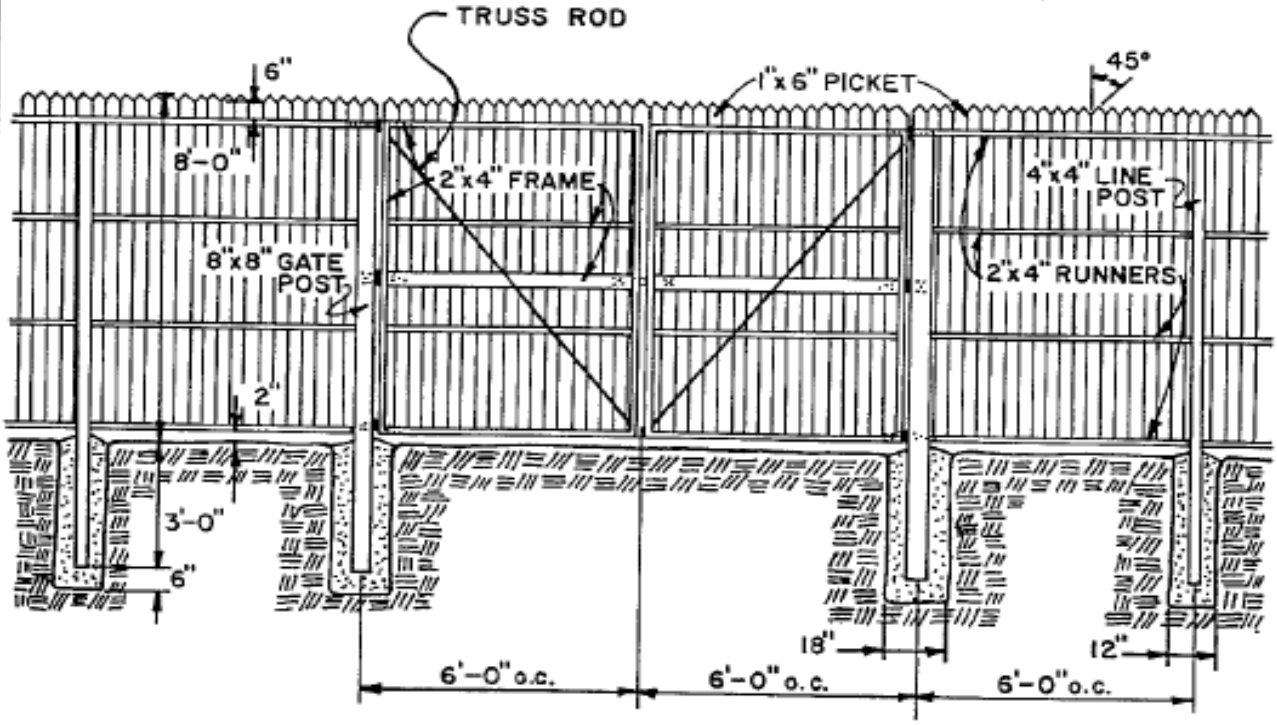

TYPICAL DOUBLE SWING DRIVE GATE

SOUTH CAROLINA REGISTERED PROFESSIONAL ENGINEER DAVID A. JOHNSON

CITY ENGINEER

DEPARTMENT OF UTILITIES AND ENGINEERING

DATE: 2-24-87

STANDARD DETAIL F.C.# 11

STANDARD DESIGN FOR FENCING

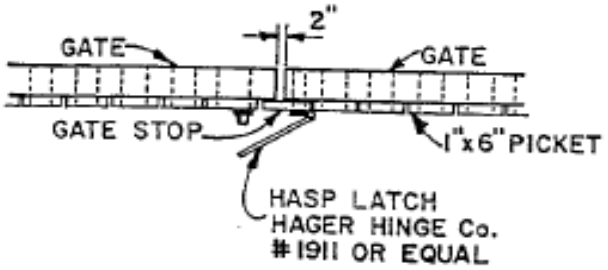

TYPICAL HASP LATCH AND GATE STOP

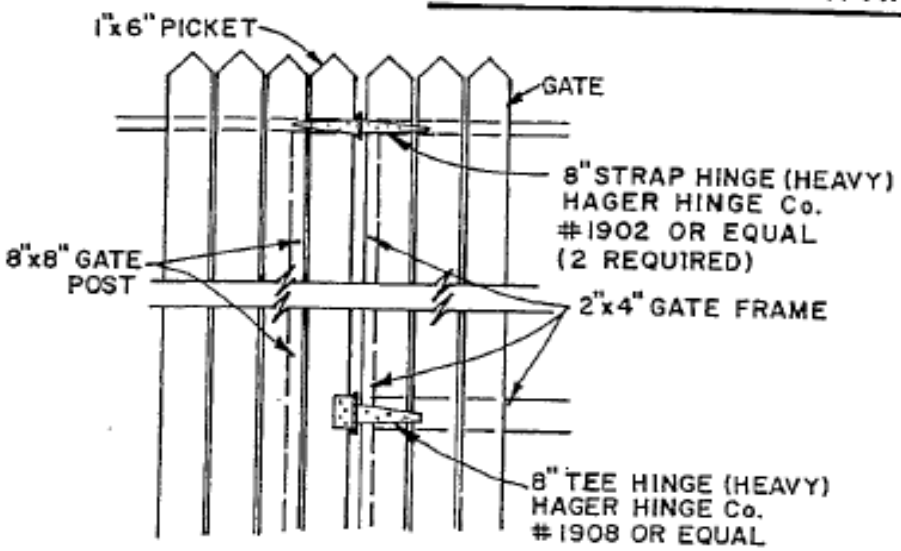

TYPICAL HINGING

SOUTH CAROLINA
REGISTERED PROFESSIONAL ENGINEER
No. 10096
DAVID A. JOHNSON
CITY ENGINEER

DEPARTMENT OF UTILITIES AND ENGINEERING

DATE: 2-24-87

STANDARD DETAIL F.C.# 12

PART 20: SPECIFICATION FOR SODDING, FERTILIZING AND SEEDING
TABLE OF CONTENTS

Paragraph	Description	Page No.
20.1	General	20-1
20.2	Construction Materials	20-1
20.3	Construction Methods	20-2
20.4	Testing (Omitted)	20-3
20.5	Measurement and Payment	20-3

CITY OF COLUMBIA REGULATIONS
PART 20
SPECIFICATIONS FOR SODDING, FERTILIZING AND SEEDING

20.1 GENERAL

20.1.1 At locations indicated on the plans, in the special provisions, or where designated by the Engineer, the Contractor shall prepare seed beds, furnish and spread fertilizers, and furnish and plant the seed specified herein on disturbed areas.

20.1.2 Any disturbed areas, which had established grass (sod), must be replaced with sod. Any seeding in these areas shall be considered temporary.

20.1.3 The Contractor shall water seeded areas and sodded areas until grass has become established.

20.2 CONSTRUCTION MATERIALS

20.2.1 Fertilizer shall be standard commercial 10-08-6 or 10-7-4 grade, uniform in composition, free flowing and suitable for application with approved equipment, delivered to the site in bags or other convenient containers, each fully labeled, conforming to applicable State Laws.

20.2.2 Lime shall be ground limestone containing all of the finer particles obtained in the grinding process and ground sufficiently fine so that not less than 80 per cent will pass through a No. 8 sieve. The calcium carbonate equivalent must be at least 80 per cent. One or both must be greater than 80 so that the multiplication of the per cent of calcium carbonate equivalent by the per cent of material passing through the No. 8 sieve will be equal to or be in excess of 0.72. The moisture content at the time of shipment must not exceed 8 per cent.

20.2.3 The classes of Seeding Mixture shall consist of one or more of the classes listed below. Seeding Mixtures form the specified class shall be designated by the Engineer, based on the season of the year when seeding operations are performed.

20.2.3.1 Seeding Mixtures

LOCATIONS	SEEDS	LBS./ACRE	SEASON TO USE
1 – Sunny	Bermuda, hulled Bermuda, unhulled Rye grass, Italian	25 25 150	February through April
2- Sunny	Bermuda, hulled Bermuda, unhulled Millet, brown top	25 25 25	May through September 15
3 – Sunny	Bermuda, unhulled Rye grass, Italian	60 150	September 15 through February

LOCATIONS	SEEDS	LBS./ACRE	SEASON TO USE
4 – Shady	Substitute carpet grass for Bermuda in 1, 2 and 3	40	All season
5 – Step Slopes	Lespedeza, Sericea (Clay Soils) Add to 1, 2, 3 and 4	25	
OR			
6 -	Love grass, weeping (Sandy Soils) Add to 1, 2, 3 and 4	30	
	Use Dolomitic Limestone at one ton per acre. Use 500 lbs. of 10-10-10 Fertilizer per acre.		

20.2.3.2 Hydro Seeding Steep Slopes:

20.2.3.2.1 After proper preparation – use the following:

½ lb. unhulled Bermuda seed / 1,000 sq.ft.
½ lb. hulled Bermuda seed / 1,000 sq. ft.
8 lbs. 12-4-8 Fertilizer / 1,000 sq.ft.
35 lbs. wood fibre with tack /1,000 sq.ft.
*4 lbs. Italian Rye grass seed / 1,000 sq.ft. (September 15 – Mark)
*Substitute ¾ lb. Brown top Millet / 1,000 sq.ft. from April to September 15

20.3 CONSTRUCTION METHODS

20.3.1 After the areas to be seeded have been brought to the proper grades and cleared on all stones, boulders and debris, the areas shall be thoroughly tilled to a depth of at least three (3) inches by discing, harrowing or other approved methods until the condition of the soil is acceptable to the Engineer. If, as a result of a rain, a crust is formed over the prepared surface, the surface shall again be placed in a suitable condition for planting.

20.3.2 Fertilizer shall be distributed uniformly at the rate of four hundred (400) pounds per acre, over the area indicated to be fertilized, and shall be incorporated into the soil to a depth of at least three (3) inches by discing, harrowing or other approved methods acceptable to the Engineer. The incorporation of fertilizer may be a part of the tillage operation specified above.

20.3.3 Lime shall be distributed uniformly on all areas to be fertilized at the rate of one (1) ton to one (1) acre and shall be incorporated in the soil to a depth of at least three (3) inches by discing, harrowing, or other methods acceptable to the Engineer, immediately following or simultaneously with the incorporation of the fertilizer.

20.3.4 Seeding Methods – No seed shall be sown during high winds or when the ground is not in a proper condition for seeding or shall any seed to sown until the purity test has been completed for the seeds to be used, and shows that the seed meets the noxious weed free requirements. Equipment shall be operated in a manner to insure complete coverage of the entire area to be seeded. When seed or fertilizer is applied with a hydraulic seeder, the rate of application shall be not less than 1,000 gallons of slurry per acre. This slurry shall contain the proper quantity of seed or fertilizer specified per acre. When using a hydraulic seeder, the fertilizer and seed shall be applied n two separate operations.

20.3.5 Within 12 hours, all seed areas, shall be rolled at right angles to the run-off with an approved type roller or cultipacker to compact the seed bed and place the seed in contact with the soil. On areas seeded with a hydraulic seeder, rolling shall not be required.

20.3.6 The optimum depth for seeding shall be one quarter (1/4) inch.

20.3.7 All legumes shall be inoculated with the proper bacteria in the amounts and manner recommended by the manufacturer of the inoculant before sowing or being mixed with other seeds for sowing. The inoculant shall be furnished by the Contractor and shall be approved by the Engineer. The seed shall be sown as soon as possible after inoculation and seed that has been standing more than five hours after inoculation shall be reinoculated before sowing. If legumes are applied by hydro seeder, three times the normal amount of inoculant shall be used. The Contractor shall furnish the inoculant and the cost of furnishing same shall be included in the contract unit price per acre for seeding of the class specified.

20.3.8 The classes of seeding mixtures shall consist of one or more of the classes listed. Seeding Mixtures from the specified classes shall be designated by the Engineer, based on the season of the year when seeding operations are performed.

20.3.9 Replacement of sodded areas – At locations specified, or shown on the plans, or designated by the Engineer, the Contractor shall remove and carefully store the sod. Upon compaction of the trench in a manner satisfactory to the Engineer, the sod shall be replace in a neat, workman like manner, over a minimum of two (2) inches of topsoil. Any deficiency in sod necessary to restore the surface to a condition comparable to that which existed before construction operations began will be furnished by the Contractor unless other specified.

20.4 TESTING (OMITTED)

20.5 MEASUREMENT AND PAYMENT

20.5.1 Sodding, Fertilizing and Seeding – Measurement of surfaces to be sodded or seeded shall be made of the area within the right-of-way designated by the Engineer for restoration. Payments shall be made at the contact unit price per acre measured to the nearest one-tenth (0.10) acre as specified. The cost of restoring areas beyond the right-of-way, designated by the Engineer, shall be borne by the Contractor.

CITY OF COLUMBIA REGULATIONS
PART 21
SANITARY SEWER SERVICE AGREEMENT

DELETED

PART 22: FLOOD DAMAGE PREVENTION ORDINANCE
TABLE OF CONTENTS

Description	Page No.
Ordinance	22-1

CITY OF COLUMBIA REGULATIONS
PART 22
FLOOD DAMAGE PREVENTION ORDINANCE

ORDINANCE

Amending 1979 Code of Ordinances of The City of Columbia,
South Carolina, Part 6, Chapter 12 Flood Damage Prevention

BE IT ORDAINED by the Mayor and Council this 3rd day of October, 1990, that the 1979 Code of Ordinances of The City of Columbia, South Carolina, Part 6, Chapter 12 Flood Damage Prevention, is amended as follows:

1. Article B, Section 6-12011 Definitions of terms, is amended by inserting the following:

(11) Existing construction means any structure for which the "Start of construction" commenced before August 26, 1981.

(12) Existing manufactured home park or subdivision means a manufactured home park or subdivision for which the construction of facilities for servicing the lots which the manufactured homes are to be affixed (including at a minimum the installation of utilities, the construction of streets, and either final site grading or the pouring of concrete pads) is completed before August 26, 1981.

(13) Expansion to an existing manufactured home park of subdivision means the preparation of additional sites by the construction of facilities for servicing the lots on which the manufactured homes are to be affixed (including the installation of utilities, the construction of streets, and either final site grading or the pouring of concrete pads).

2. (11) Flood or flooding through (18) Highest adjacent grade are renumbered (14) through (21).

3. (22) is added as follows:

(22) Historic structure means any structure that is:

a. Listed individually in the National Register of Historic Places (a listing maintained by the Department of Interior) or preliminary determined by the Secretary of the Interior as meeting the requirements for individual listing on the National Register:

b. Certified or preliminarily determined by the Secretary of the Interior as contributing to the historical significance of a registered historic district or a district preliminary determined by the Secretary to quality as a registered historic district:

c. Individually listed on a state inventory of historic places in states with historic preservation programs which have been approved by the Secretary of the Interior; or

d. Individually listed on a local inventory of historic places in communities with historic preservation programs that have been certified either: 1. by an approved state

program as determined by the Secretary of the Interior, or 2. directly by the Secretary of the Interior in states without approved programs.

4. (20) Manufactured home is re-numbered (23), (19) Mean sea level is re-numbered (24), (21) National geodetic vertical datum (NGVD) is re-numbered (25).

5. (22) is amended to read as follows:

(26) New construction means structures for which the "start of construction" commenced on or after the effective date of this chapter. The term also includes any subsequent improvements to such structure.

6. (27) and (28) are added as follows:

(27) New manufactured home park or subdivision means a manufactured home park or subdivision for which the construction of facilities for servicing the lots on which the manufactured homes are to be affixed (including at a minimum the installation of utilities, the construction of streets, and either final site grading or the pouring of concrete pads) is completed on or after the effective date hereof.

(28) Recreational vehicle means a vehicle which is:

a. built on a single chassis;

b. 400 square feet or less when measured at the largest horizontal projection;

c. designed to be self-propelled or permanently towable by a light duty truck; and

d. designed primarily not for use as a permanent dwelling but as temporary living quarters for recreational, camping, travel or seasonal use.

7. (23) Start of construction is re-numbered (29), (24) Structure is renumbered (30).

8. (31) is added as follows:

(31) Substantial damage means damage of any origin sustained by a structure whereby the cost or restoring the structure to its before damaged condition would equal or exceed 50 per cent of the market value of the structure before the damage occurred.

9. (25) Substantial improvement is re-numbered (32).

10. (33) is added as follows:

(33) Substantially improved existing manufactured home parks or subdivision is where the repair, reconstruction, rehabilitation or improvement of the streets, utilities and pads equal or exceed 50 per cent of the value of the streets, utilities and pads before the repair, reconstruction or improvement commenced.

11. (26) is re-numbered (34).

12. Article E, Section 6-12052 Specific standards, is amended by inserting the following:

(4) Standards for manufactured homes and recreational vehicles.

(a) All manufactured homes placed, or substantially improved, on individual lots or parcels, in expansions to existing manufactured home parks or subdivisions, or in substantially improved manufactured home parks or subdivisions, must meet all the requirements for new construction, including elevation and anchoring.

(b) All manufactured homes placed or substantially improved in an existing manufactured home park or subdivision must be elevated so that:

(i) the lowest floor of the manufactured home is elevated no lower than two (2) feet above the level of the base flood elevation; or

(ii) the manufactured home chassis is supported by reinforced piers or other foundation elements of at least an equivalent strength, of no less than 36 inches in height above grade;

(iii) the manufactured home must be securely anchored to the adequately anchored foundation system to resist flotation, collapse and lateral movement;

(iv) in an existing manufactured home park or subdivision on which a manufactured home has incurred "substantial damage" as the result of a flood, any manufactured home placed or substantially improved must meet the standards of Article E, Section 6-12052 (4) (a) or (b) above.

(c) All recreational vehicles placed on sites must either

(i) be fully licensed and ready for highway use, or

(ii) the recreational vehicle must meet all the requirements for new construction including anchoring and elevation requirements of Article E, Section 6-12052 (4) (b) (i) and (iii) above.

A recreation vehicle is ready for highway us if it is on its wheels or jacking system, is attached to the site only by quick disconnect type utilities and security devices, and has no permanently attached structures.

13. (4) Floodways. Is re-numbered (5).

Requested by:

_____ /s_____

Approved by:

/s_____ ATTEST:

City Manager

Approved as to form:

/s_____ /s_____

City Attorney City Clerk

Introduced September 19, 1990

Final Reading October 3, 1990

ORDINANCE

Amending 1979 Code of Ordinances of The City of Columbia,
South Carolina, Part 6, Chapter 12 Flood Damage Prevention,
by Repealing Entire Chapter and Adopting new Chapter 12

BE IT ORDAINED by the Mayor and Council this 3rd day of February, 1988, that the 1979 Code of Ordinances of The City of Columbia, South Carolina, Part 6, Chapter 12 Flood Damage Prevention, is hereby repealed and new Chapter 12 is adopted as shown on attached.

Requested by:

_____ /s_____
MAYOR

Approved by:

/s_____

ATTEST:

Approved as to Form:

/s_____ /s_____
City Attorney City Clerk

Introduced: 1/20/88

Final Reading: 2/3/88

FLOOD DAMAGE PREVENTION ORDINANCE

ARTICLE 1. STATUTORY AUTHROIZATION, FINGINS OF FACT, PURPOSE AND OBJECTIVES

SECTION A. STATUTORY AUTHROIZATION

The Legislature of the State of South Carolina has in Act No. 283 of 1975 (statutes) delegated the responsibility to local governmental units to adopt regulations designed to promote the public health, safety and general welfare of its citizenry. Therefore, the City Council____ (governing body) of the City of Columbia, South Carolina does ordain as follows:

SECTION B. FINDINGS OF FACT

(1) The flood hazard areas of the City of Columbia are subject to periodic inundation which results in loss of life and property, health and safety hazards, disruption of commerce and governmental services, extraordinary public expenditures for flood protection and relief, and impairment of the tax base, all of which adversely affect the public health, safety and general welfare.

(2) These flood losses are caused by the cumulative effect of obstructions in flood plains causing increases in flood heights and velocities, and by the occupancy in flood hazard areas by uses vulnerable to floods or hazardous to other lands which are inadequately elevated, flood-proofed, or otherwise protected form flood damages.

SECTION C. STATEMENT OF PURPOSE

It is the purpose of this ordinance to promote the public health, safety and general welfare to minimize public and private losses due to flood conditions in specific areas by provisions designed to:

(1) restrict or prohibit uses which are dangerous to health, safety and property due to water, erosion, flood heights and velocities;

(2) require that uses vulnerable to floods, including facilities which serve such uses, be protected against flood damage at the time of initial construction;

(3) control the alteration of natural flood plains, stream channels, and natural protective barriers which are involved in the accommodation of flood waters;

(4) control filling, grading, dredging and other development which may increase erosion or flood damage; and ,

(5) prevent or regulate the construction of flood barriers which will unnaturally divert flood waters or which may increase flood hazards to other lands.

SECTION D. OBJECTIVES

The objectives of this ordinance are:

(1) to protect human life and health;

(2) to minimize expenditures of public money for costly flood control projects;

(3) to minimize the need for rescue and relief efforts associated with flooding and generally undertaken at the expense of the general public;

(4) to minimize prolonged interruptions;

(5) to minimize damage to public facilities and utilities such as water and gas mains, electric, telephone and sewer lines, streets and bridges located in flood plains;

(6) to help maintain a stable tax base by providing for the sound use and development of flood prone areas in such a manner as to minimize future flood blight arms; and,

(7) to insure that potential home buyers are notified that property is in a flood are.

ARTICLE 2. DEINFITIONS

Unless specifically defined below, words or phrases used in this ordinance shall be interpreted so as to give them the meaning they have in common usage and to give this ordinance its most reasonable application.

"Addition (to an existing building)" means any walled and roofed expansion to the perimeter of a building in which the addition is connected by a common loadbearing wall other than a fire wall. Any walled and roofed addition which is connected by a fire wall or is separated by independent perimeter loadbearing walls is new construction.

"Appeal" means a request for a review f the _____City Engineer's_____
(local administrator)

"Area of shallow flooding" means a designated AO Zone on a community's Flood Insurance Rate Map (FIRM) with base flood depths from one to three feet where a clearly defined channel does not exist, where the path of flooding is unpredictable and indeterminate, and where velocity flow may be evident.

"Area of special flood hazard" is the land in the flood plain within a community subject to a one percent or greater chance of flooding in any given year.

"Base flood" means the flood having a one percent chance of being equaled or exceeded in any given year.

"Basement" means that portion of a building having its first floor subgrade (below ground level) on all sides.

"Breakaway wall" means a wall that is not part of the structural support of the building and is intended through its design and construction to collapse under specific lateral loading forces without causing damage to the elevated portion of the building or the supporting foundation system.

"Building" means any structure build for support, shelter, or enclosure for any occupancy or storage.

"Development" means any man-made changes to improved or unimproved real estate, including, but not limited to, buildings or other structures, mining, dredging, filling, grading, paving, excavation, drilling operations, or permanent storage of materials.

"Elevated building" means a non-basement building built to have the lowest floor elevated above the ground level by means of fill, solid foundation perimeter walls, pilings, columns (posts and piers), shear walls, or breakaway walls.

"Flood" or "flooding" means a general and temporary condition of partial or complete inundation of normally dry land areas from the unusual and rapid accumulation of surface waters from any source.

"Flood Hazard Boundary Map (FHBM)" means an official map of a community, issued by the Federal Emergency Management Agency, where the boundaries of the areas of special flood hazard have been defined as Zone A.

"Flood Insurance Rate Map (FIRM)" means an official map of a community, on which the Federal Emergency Management Agency has delineated both the areas of special flood hazard and the risk premium zones applicable to the community.

"Flood Insurance Study" is the official report provided by the Federal Emergency Management Agency. The report contains flood profiles, as well as the Flood Boundary and Floodway Map and the water surface elevation of the base flood.

"Floodway" means the channel of a river or other watercourse and the adjacent land areas that must be reserved in order to discharge the base flood without cumulatively increasing the water surface elevation more than one foot.

"Floor" means the top surface of an enclosed area in a building (including basement), I.e.., top of a slab in concrete slab construction or top of wood flooring in wood frame construction. The term does not include the floor of a garage used solely for parking vehicles.

"Functional dependent facility" means a facility which cannot be used for its intended purpose unless it is located or carried out in close proximity to water, such as a dock. The term does not include long-term storage, manufacture, sales, or service facilities.

"Highest adjacent grade" means the highest natural elevation of the ground surface, prior to construction, next to the proposed walls of a structure.

"Mean Sea Level" means the average height of the sea for all stages of the tide. It is used as a referenced for establishing various elevations within the flood plain. For the purpose of this ordinance, the term is synonymous with National Geodetic Vertical Datum (NGVD).

"Manufactured home" means a structure, transportable in one or more sections, which is built on a permanent chassis and designed to be used with or without a permanent foundation when connected to the required utilities. The term also includes park trailers, travel trailers, and similar transportable structures placed on a site for 180 consecutive days or longer and intended to "be improved property.

"National Geodetic Vertical Data (NGVD)" as corrected in 1929 is a vertical control used as a reference for establishing various elevations within the flood plain.

"New construction" means structures for which the "start of construction" commenced on or after the effective date of this ordinance.

"Start of construction" includes substantial improvements, and means the date the building permit was issued, provided the actual start of construction, repair, reconstruction, or improvement was within 180 days of the permit date. The actual start means the first placement of permanent construction of a structure (including a manufactured home) on a site, such as the pouring of slabs or footings, installation of piles, construction of columns, or any work beyond the stage of excavation or the placement of a manufactured home on a foundation. Permanent construction does not include land preparation, such as clearing, grading or filling; nor does it include the installation of streets and/or walkways; nor does it include excavation for basement, footings, piers or foundations or the erection of temporary forms; nor does it include the installation on the property of accessory buildings, such as garages or sheds not occupied as dwelling units or not part of the main structure.

"Structure" means a walled and roofed building that is principally above ground, a manufactured home, a gas or liquid storage tank, or other man-made facilities or infrastructures.

"Substantial improvement" means any combination of repairs, reconstruction, alteration, or improvements to a structure in which the cumulative cost equals or exceeds fifty percent of the market value of the structure. The market value of the structure should be (1) the appraised value of the structure prior to the start of the initial repair or improvement, or (2) in the case of damage, the value of the structure prior to the damage occurring. For the purposes of this definition, "substantial improvement" is considered to occur when the first alteration of any wall, ceiling, floor, or other structural part of the building commences, whether or not that alteration affects the external dimensions of the structure. The term does not, however, include any project for improvement of a structure required to comply with existing health, sanitary, or safety code specifications which are solely necessary to assure safe living conditions.

"Variance" is a grant of relief from the requirements of this ordinance which permits construction in a manner otherwise prohibited by this ordinance where specific enforcement would result in unnecessary hardship.

ARTICLE 3. GENERAL PROVISIONS

SECTION A. LANDS TO WHICH THIS ORDINANCE APPLIES

This ordinance shall apply to all areas of special flood hazard within the jurisdiction of the City of Columbia.

SECTION B. BASIS FOR ESTABLISHING THE AREAS OF SPECIAL FLOOD HAZARD

The areas of special flood hazard identified by the Federal Emergency Management Agency in its Flood Insurance Study for the City of Columbia, and any other supporting data, and any revisions thereto, are adopted by reference and declared to be a part of this ordinance.

SECTION C. ESTABLISHMENT OF DEVELOPMENT PERMIT

A Development Permit shall be required in conformance with the provisions of this ordinance prior to the commencement of any development activities.

SECTION D. COMPLIANCE

No structure or land shall hereafter be located, extended, converted, or structurally altered without full compliance with the terms of this ordinance and other applicable regulations.

SECTION E. ABROGATION AND GREATER RESTRICTIONS

This ordinance is not intended to repeal, abrogate, or impair any existing easements, covenants, or deed restrictions. However, where this ordinance and another conflict or overlap, whichever imposes the more stringent restrictions shall prevail.

SECTION F. INTERPRETATION

In the interpretation and application of this ordinance all provisions shall be: (1) considered as minimum requirements; (2) liberally construed in favor of the governing body, and; (3) deemed neither to limit nor repeal any other powers granted under state statutes.

SECTION G. WARNING AND DISCLAIMER OF LIABILITY

The degree of flood protection required by this ordinance is considered reasonably for regulatory purposes and is based on scientific and engineering considerations. Larger floods can and will occur on rare occasions. Flood heights may be increased by man-made or natural causes. This ordinance does not imply that land outside the areas of special flood hazard or uses permitted within such areas will be free from flooding or flood damages. This ordinance shall not create liability on the part of the City of Columbia or by any officer or employee thereof for flood damages that result from reliance on this ordinance or any administrative decision made thereunder.

SECTION H. PENALTIES FOR VIOLATION

Violation of the provisions of this ordinance or failure to comply with any of its requirements, including violation of conditions and safeguards established in connection with grants of variance or special exceptions, shall constitute a misdemeanor. Each day such violation continues shall be considered a separate offense. Nothing herein contained shall prevent the City of Columbia from taking such other lawful action as is necessary to prevent or remedy any violation.

ARTICLE 4. ADMINISTRATION

SECTION A. DESIGNATION OF CITY ENGINEER
(local administrator)

The _____City Engineer____ is hereby appointed to administer and implement the provisions
(local administrator)
of this ordinance.

SECTION B. PERMIT PROCEDURES

Application for a Development Permit shall be made to the ____City Engineer____ on forms
(local administrator)
furnished by him or her prior to any development activities, and may include, but not be limited to, the following; plans in duplicate drawn to scale showing the nature, location, dimensions, and elevations of the area in question; existing or proposed structures, fill, storage of materials, drainage, facilities, and the location of the foregoing. Specifically, the following is required:

(1) Application Stage.

(a) Elevation in relation to mean sea level of the proposed lowest floor (including basement) of all structures;

(b) Elevation in relation to mean sea level to which any non-residential structure will be flood-proofed;

(c) Certification from a registered professional engineer or architect that the non-residential flood-proofed structure will meet the flood-proofing criteria in Article 5, Section B (2);

(d) Description of the extent to which any watercourse will be altered or relocated as a result of proposed development, and;

(2) Construction Stage.

Provide a floor elevation or flood-proofing certification after the lowest floor is completed. Upon placement of the lowest floor or flood-proofing by whatever construction means, it shall be the duty of the permit holder to submit to the __City Engineer____ a
(local administrator)
certification of the elevation of the lowest floor or flood-proofed elevation, asbuilt, in relation to mean sea level. Said certification shall be prepared by or under the direct supervision of a registered land surveyor or professional engineer and certified by same. When flood-proofing is utilized for a particular building, said certification shall be prepared by or a under the direct supervision of a professional engineer of architect and certified by same. Any work undertaken prior to submission of the certification shall be at the permit holder's risk. The
___City Engineer___ shall review the floor elevation survey data submitted. Deficiencies
(local administrator)
detected by such review shall be corrected by the permit holder immediately and prior to further progressive work being permitted to proceed. Failure to submit the survey or failure to make said corrections required hereby, shall be cause to issue a stop-work order for the project.

SECTION C. DUTIES AND RESPONSIBLITIES OF THE CITY ENGINEER

Duties of the ____City Engineer___ shall include, but not be limited to:
(local administrator)

(1) Review all development permits to assure that the permit requirements of this ordinance have been satisfied.

(2) Advise permittee that additional federal or state permits may be required, and if specific federal or state permit requirements are known, require that copies of such permits be provided and maintained on file with the development permit.

(3) Notify adjacent communities and the Water Resources Commission prior to any alteration or relocation of a watercourse, and submit evidence of such notification to the Federal Emergency Management Agency.

(4) Assure that maintenance is provided within the altered or relocated portion of said watercourse so that the flood-carrying capacity is not diminished.

(5) Verify and record the actual elevation (in relation to mean sea level) of the lowest floor (including basement) of all new or substantially improved structures in accordance with Article 4, Section B (2).

(6) Verify and record the actual elevation (in relation to mean sea level) to which the new or substantially improved structures have been flood-proofed, in accordance with Article 4, Section B (2).

(7) When flood-proofing is utilized for a particular structure, the ___City Engineer___
(local administrator)
shall obtain certification from a registered professional engineer or architect, in accordance with Article5, Section B (2).

(8) Where interpretation is needed as to the location of boundaries of the areas of special flood hazard (for example, where there appears to be a conflict between a mapped boundary and actual field conditions) the ____City Engineer____ shall make
(local administrator)
the necessary interpretation. The person contesting the location of the boundary shall be given a reasonable opportunity to appeal the interpretation as provided in this article.

(9) When base flood elevation data or floodway data have not been provided in accordance with Article 3, Section B, then the _____City Engineer_____ shall obtain,
(local administrator)
review, and reasonably utilize any base flood elevation data available from a federal, state or other source, in order to administer the provisions of Article 5.

(10) All records, pertaining to the provisions of this ordinance shall be maintained in the office of the ____City Engineer____ and shall be open for public inspection.
(local administrator)

SECTION D. VARIANCE PROCEDURES

(1) The Building Board of Adjustments and Appeals as established by
(appeal board)
Columbia City Council shall hear and decide appeals and requests for variances
(local unit)
from the requirements of this ordinance.

(2) The Building Board of Adjustments and Appeals shall hear and decide
(appeal board)
appeals when it is alleged there is an error in any requirement, decision, or determination made by the _____City Engineer_____ in the enforcement of
(local administrator)
administration of this ordinance.

(3) Any person aggrieved by the decision of the

Building Board of Adjustment and Appeals or any taxpayer may appeal such
(appeal board)
decision to the ___Court of Common Pleas__, as provided by State Law.
(name of appropriate court)

(4) Variances may be issued for the reconstruction, rehabilitation or restoration of structures listed on the National Register of Historic Places or the State Inventory of Historic Places without regard to the procedures set forth in the remainder of this section, except for Article 4, Section D (8) (a) and (d), and provided the proposed reconstruction, rehabilitation or restoration will not result in the structure losing its historical designation.

(5) In passing upon such applications, the Building Board of Adjustments and Appeals
_ (appeal bond)
shall consider all technical evaluations, all relevant factors, all standards specified in other sections of this ordinance, and:

(a) the danger that materials may be swept onto other lands to the injury of others;

(b) the danger to life and property due to flooding or erosion damage;

(c) the susceptibility of the proposed facility and its contents to flood damage and the effect of such damage on the individual owner;

(d) the importance of the services provided by the proposed facility to the community;

(e) the necessity of the facility to a waterfront location, in the case of a functionally dependent facility;

(f) the availability of alternative locations, not subject to flooding or erosion damage, for the proposed use;

(g) the compatibility of the proposed use with existing and anticipated development;

(h) the relationship of the proposed use to the comprehensive plan and flood plain management program for that area;

(i) the safety of access to the property in times of flood for ordinary and emergency vehicles;

(j) the expected heights, velocity, duration, rate of rise and sediment transport of the flood waters and the effects of wave action, if applicable, expected at the site, and;

(k) the cost of providing governmental services during and after flood conditions including maintenance and repair of public utilities and facilities such as sewer, gas, electrical, and water systems, and streets and bridges.

(6) Upon consideration of the factors listed above, and the purposes of this ordinance, the Building Board of Adjustments and Appeals may attach such
(appeal board)
conditions to the granting of variances as it deems necessary to further the purposes of this ordinance.

(7) Variance shall not be issued within any designated floodway if any increase in flood levels during the base flood discharge would result.

(8) Conditions for Variances:

(a) Variances shall only be issued upon a determination that the variance is the minimum necessary, considering the flood hazard, to afford relief; and in the instance of a historical building, a determination that the variance is the minimum necessary so as not to destroy the historic character and design of the building;

(b) Variances shall only be issued upon (i) a showing of good and sufficient cause, (ii) a determination that failure to grant the variance would result in exceptional hardship, and; (iii) a determination that the granting of a variance will not result in increased flood heights, additional threats to public safety, extraordinary public expense, create nuisance, cause fraud on or victimization of the public, or conflict with existing local laws or ordinances.

(c) Any applicant to whom a variance is granted shall be given written notice specifying the difference between the base flood elevation and the elevation to which the structure is to be built and starting that the cost of flood insurance will be commensurate with the increased risk resulting from the reduced lowest floor elevation.

(d) The ___City Engineer__ shall maintain the records of all appeal
(local administrator)
actions and report any variances to the Federal Emergency Management Agency upon request.

Article 5. PROVISIONS FOR FLOOD HAZARD REDUCTION

SECTION A. GENERAL STANDARDS

In all areas of special flood hazard the following provisions are required:

(1) New construction and substantial improvements shall be anchored to prevent flotation, collapse or lateral movement of the structure;

(2) Manufactured homes shall be anchored to prevent flotation, collapse, or lateral movement. Methods of anchoring may include, but are not limited to, use of over-the-top or frame ties to ground anchors. This standard shall be in addition to and consistent with applicable state requirements for resisting wind forces.

(3) New construction and substantial improvements shall be constructed with materials and utility equipment resistant to flood damage;

(4) New construction and substantial improvements shall be constructed by methods and practices that minimize flood damage;

(5) Electrical, heating, ventilation, plumbing, air conditioning, equipment, and other service facilities shall be designated and/or located so as to prevent water from entering or accumulating within the components during conditions of flooding.

(6) New and replacement water supply systems shall be designed to minimize or eliminate infiltration of flood waters into the system;

(7) New and replacement sanitary sewage systems shall be designed to minimize or eliminate infiltration of flood waters into the systems and discharges from the systems into flood waters;

(8) On-site waste disposal systems shall be located and constructed to avoid impairment to them or contamination from them during flooding, and;

(9) Any alteration, repair, reconstruction or improvements to a structure which is in compliance with the provisions of this ordinance, shall meet the requirements of "new construction" as contained in this ordinance.

SECTION B. SPECIFIC STANDARDS

In all areas of special flooding hazard where base flood elevation data have been provided, as set forth in Article 3, Section B, or Article 4, Section C (9), the following provisions are required:

(1) Residential Construction – New construction or substantial improvement of any residential structure shall have the lowest floor, including basement, elevated no lower than two (2) feet above the base flood elevation. Should solid foundation perimeter walls be used to elevate a structure, openings sufficient to facilitate the unimpeded movements of flood waters shall be provided in accordance with standards of Article 5, Section B (3).

(2) Non-residential Construction – New construction or substantial improvement of any commercial, industrial, or non-residential structure shall have the lowest floor, including basement, elevated no lower than two (2) feet above the level of the base flood elevation. Structures located in all A-zones may be flood-proofed in lieu of being elevated provided that all areas of the structures below the required elevation are water tight walls substantially impermeable to the passage of water, and use structural components having the capability

of resisting hydrostatic and hydrodynamic loads and the effects of buoyancy. A registered professional engineer or architect shall certify that the standards of this subsection are satisfied. Such certification shall be provided to the official as set forth in Article 4, Section B (2).

(3) Elevated buildings – New construction or substantial improvements of elevated building that include fully enclosed areas formed by foundation and other exterior walls below the base flood elevation shall be designed to preclude finished living space and designed to allow for the entry and exit of flood waters to automatically equalize hydrostatic flood forces on exterior walls.

(a) Designs for complying with this requirement must either be certified by a professional engineer or architect or meet the following minimum criteria:

(i) Provide a minimum of two openings having a total net area of not less than one square inch for every square foot of enclosed area subject to flooding;

(ii) the bottom of all opening shall be no higher than one foot above grade; and,

(iii) Openings may be equipped with screens, louvers, valves or other coverings or devices provided they permit the automatic flow of flood waters in both directions.

(b) Electrical, plumbing and other utility connections are prohibited below the base flood elevation;

(c) Access to the enclosed area shall be the minimum necessary to allow for parking of vehicles (garage door) or limited storage of maintenance equipment used in connection with the premises (standard exterior door) or entry to the living area (stairway or elevator); and

(d) The interior portion of such enclosed area shall not be partitioned or finished into separate rooms

(4) Floodways – Located within areas of special flood hazard established in Article 3, Section B, are areas designed as floodways. Since the floodway is an extremely hazardous area due to the velocity of flood waters which carry debris, potential projectiles and has erosion potential, the following provisions shall apply;

(a) Prohibited encroachments, including fill, new construction, substantial improvements and other developments unless certification (with supporting technical data) by a professional engineer is provided demonstrating that encroachment shall not result in any increase in flood levels during the base flood discharge;

(b) If Article 5, Section B (4) (a) is satisfied, all new construction and substantial improvements shall comply with all applicable flood hazard reduction provisions of Article 5.

(c) Prohibt the placement of manufactured homes (mobile homes), except in an existing manufactured homes (mobile homes) park or subdivision. A replacement manufactured home may be placed on a lot in an existing manufactured home park or subdivision provided the anchoring standards or Article 5, Section A (2), and the elevation standards of Article 5, Section B (1) are met.

SECTION C. STANDARDS FOR STREAMS WITHOUT ESTABLISHED BASE FLOOD ELEVATIONS AND/OR FLOODWAYS.

Located within the areas of special flood hazard established in Article 3, Section B, where small streams exist but where no base flood data have been provided or where no floodways have been provided, the following provisions apply:

(1) No encroachments, including fill material or structures shall be located within a distance of the stream bank equal to five (5) times the width of the stream at the top of the bank or twenty feet each side from top to bank, whichever is greater, unless certification by a professional engineer is provided demonstrating that such encroachments shall not result in any increase in flood levels during the occurrence of the base flood discharge.

(2) New construction or substantial improvements of structures shall be elevated or flood-proofed to elevations established in accordance with Article 4, Section C (9).

SECTION D. STANDARDS FOR SUBDIVISION PROPOSALS

(1) All subdivision proposals shall be consistent with the need to minimize flood damage;

(2) All subdivision proposals shall have public utilities and facilities such as sewer, gas, electrical and water systems located and constructed to minimize flood damage;

(3) All subdivision proposals shall have adequate drainage provided to reduce exposure to flood hazards, and;

(4) Base flood elevation data shall be provided for subdivision proposals and other proposed development (including manufactured homes parks and subdivisions) which is greater than the lesser of fifty lots or five acres.

SECTION E. STANDARDS FOR AREAS OF SHALLOW FLOODING (AO ZONES)

Located within the areas of special flood hazard established in Article 3, Section B, are areas designed as shallow flooding areas. These areas have special flood hazards associated with base flood depths of one to three feet (1’-3’) where a clearly defined channel does not exist and the path of flooding is unpredictable and indeterminate; therefore, the following provisions apply:

(1) All new construction and substantial improvements of residential structures shall have the lowest floor, including basement, elevated to the depth number on the Flood Insurance Rate Map, in feet, above the highest adjacent grade. If not depth number is specified, the lowest floor, including basement, shall be elevated, at least two (2) feet above the highest adjacent grade.

(2) All new construction and substantial improvements of non-residential structures shall:

(a) have the lowest floor, including basement, elevated to the depth number specified on the Flood Insurance Rate Map, in feet, above the highest adjacent grade. If no depth number is specified, the lowest floor, including basement shall be elevated at least two (2) feet above the highest adjacent grade, or;

(b) together with attendant utility and sanitary facilities be completely flood-proofed to or above that level so that any space below that level is watertight with walls substantially impermeable to the passage of water and with structural components having the capability of resisting hydrostatic and hydrodynamic loads and effects of buoyancy.

PART 23: MINORITY AND FEMALE BUSINESS ENTERPRISE PROGRAM
TABLE OF CONTENTS

Description	Page No.
Policy	23-1
Resolution	23-2

CITY OF COLUMBIA REGULATIONS
PART 23
MINORITY AND FEMALE BUSINESS ENTERPRISE PROGRAM

It is the policy of the City of Columbia that local Minority and Female Business Enterprises (MBE and FBE) shall be afforded full opportunity to participate in the construction of City projects.

The term "Local Minority and Female Business Enterprise" or "Local MBE and FBE" shall be consistent with the definition as found under Amendment Number 95507 of the Small Business Act of 1978 and must be a business enterprise with its principal office physically located in the City of Columbia Metropolitan statistical area which is licensed pursuant to the City's licensing provisions and expends funds to provide for the expenses of the Government of the City of Columbia. Further information concerning this definition may be obtained from the office of the City's Purchasing Agent.

The City Manager shall suggest a level for local MBE and FBE participation on each specific prime contact involving $25,000.00 or more. Each bidder or proposer shall make a good faith effort to meet or exceed the suggested level of participation.

Each prime contractor or prime contracts involving $25,000.00 or more are required to provide a list of all minority contractors contracted and the results of those contacts and document that a good faith effort has been made by the contractor to utilize local Minority and Female Business Enterprises by using the criteria set fort in Resolution R-90-68.

RESOLUTION

Establishing a Minority and Female Business
Enterprise Program

WHEREAS, The South Carolina General Assembly has declared that business firms owned and operated by minority persons historically have been restricted from full participation in or free enterprise system to a degree disproportionate to other businesses, and that it is in the state's best interest to assist minority-owned businesses to develop fully as a part of policies and programs which are designed to promote balanced economic and community growth; and

WHEREAS, The City of Columbia recognizes that it has a particular responsibility to promote participation of local Minority Business Enterprises (MBE's) in the Columbia Metropolitan Area in furtherance of the State policy, and to promote participation of local Female Business Enterprises (FBE's); NOW, THEREFORE,

BE IT RESOLVED by the Mayor and Council of The City of Columbia, South Carolina, this 4th day of June, 1986, as follows:

1. Policy. It is the policy of The City of Columbia that local MBE's and FBE's shall be afforded the opportunity to participate fully in the overall procurement process of The City of Columbia.

2. Objectives. The objectives of the MBE & FBE Program are to take specific steps to ensure non-discriminatory results and practices in the future, to involve local MBE's and FBE's fully in the City's procurement process.

3. Applicability. Except as otherwise provided herein, the resolution shall also apply to any federally-assisted activity with subcontracting possibilities.

4. Definitions.

A. "Minority" means a person who is a citizen or lawful permanent resident of the United States and who is:

(i) Black (a person having origins in any of the black racial groups of Africa);

(ii) Hispanic (a person of Mexican, Puerto Rican, Cuban, Central of South American, or other Spanish culture or origin, regardless of race);

(iii) Asian American (a person having origins in any of the original peoples of the Far East, Southeast Asia, the Indian subcontinent, or the Pacific Islands);

(iv) American Indian and Alaskan Native (a person having origins in any of the original peoples of North America).

B. The term "Local Minority Business Enterprise" or "Local MBE" shall be consistent with the definition as found under Amendment Number 95507 of the Small Business Act of 1978 and must be a business enterprise with its principal office physically located in the City of Columbia metropolitan statistically area which is licensed pursuant to the City's licensing

provisions and expends funds to provide for the expense of the Government of The City of Columbia.

(i) A "socially and economically disadvantaged small business" means any small business concern which:

(a) Is at least fifty-one (51%) percent owned and controlled by one or more citizens of the United States who are determined to be socially and economically

R-86-10

(b) In the case of a concern which is a corporation, fifty-one (51%) percent of all classes of voting stock of such corporation must be owned and controlled by an individual determined to be socially and economically disadvantaged.

(c) In the case of a concern which is a partnership, fifty-one (51%) percent of the partnership interest must be owned by an individual or individuals determined to be socially and economically disadvantaged and whose management and daily business operations are controlled by individuals determined to be socially and economically disadvantaged. Such individuals must be involved in the daily management and operations of the business concerned.

C. The term "Local Female Business Enterprise" or "Local FBE" shall mean a business enterprise with its principal office physically located in the City of Columbia metropolitan statistical area, which is licensed pursuant to the City's licensing provisions, which expends funds to provide for the expense of the Government of The City of Columbia, and which is at least fifty-one (51%) percent owned and controlled by one or more citizens of the United States who are female.

5. Discrimination Prohibited. No person shall be excluded from participation in, denied the benefits of, or otherwise discriminated against in connection with the award and performance of any City of Columbia or federally-assisted contract on the grounds of race, color, national origin, or sex.

6. Local MBE & FBE Liaison Officer. The City Manager shall designate a Local MBE & FBE Liaison Officer who shall administer the Local MBE & FBE Program. The Local MBE & FBE Liaison Officer shall be responsible for developing, managing, and implementing the Local MBE & FBE Program on a day-to-day basis; for carrying out technical assistance activities for disseminating information on available business opportunities so that Local MBE's and FBE's are provided an equitable opportunity to bid on all procurements; and such other responsibilities as are set forth in this resolution.

7. Procedures to Ensure that Local MBE's and FBE's Have an Equitable Opportunity to Compete for Contracts and Subcontracts. The City shall use the following techniques to facilitate MBE and FBE participation in contracting activities:

a. Arrange bid solicitations, time for the submission of bids and bid specifications so as to include the participation of local MBE's and FBE's at no loss to the City.

~~b. All prime contractors on procurements costing $25,000.00 or more will be required to complete a certification listing all minority contractors contacted and results thereof.~~

~~c. All bid specifications will require prime contractors to make reasonable efforts to utilize local MBE's and FBE's.~~

d. The City, to the extent economically and legally feasible, will break down larger contracts into smaller contracts to include the participation of small business.

e. The City will seek local MBE and FBE participation from major suppliers and Contractors by encouraging meaningful participation in minority-majority cooperative efforts by providing specifications in a timely manner to local MBE's and FBE's, majority Contractors and business associations, and by restricted competitive negotiations where appropriate and allowable.

f. The City will provide technical assistance to Local MBE's and FBE's.

g. The City will hold periodically seminars or workshops to acquaint the business community with the requirements and scope of its procurement activities. These sessions will be coordinated with organizations that are familiar with the willing to reduce problems experienced by Local MBE's and FBE's.

h. The City will utilize local minority owned banks wherever feasible.

i. The City will maintain accurate records of the participation of MBE's and FBE's.

j. It is the intent of this policy to aid local MBE's and FBE's and such businesses in the Columbia Metropolitan statistical area as meet the definitions of MBE's and FBE's and that they shall be afforded full opportunity to participate in procurement through the goals and procedures established herein, provided that the integrity of the bidding procedures and process of awarding contracts to the low acceptable bidders is maintained.

8. Directory. The city shall have available resources, including directories or lists, to facilitate in the identification of MBE's and FBE's with capabilities available to bidders in their efforts to meet the Local MBE & FBE requirements.

~~9. Procurement Goals. Specific procurement goals shall be developed by the City Manager with the recommendation of the Local MBE and FBE Liaison Officer and reported to City Council for consideration and approval annually.~~

~~10. Contract Goals. The City Manager shall establish contract goals for local MBE participation on each specific prime contract involving $25,000.00 or more with which the bidder or proposer must make a good faith effort to meet or exceed or demonstrate that it could not meet.~~

11. Records and Reports. The Local MBE & FBE Liaison Officer shall maintain such records and provide such reports quarterly to the City Manager to ensure full compliance with the Local MBE & FBE Program.

12. Complaints. Any complaint received by the City of Columbia concerning the Local MBE & FBE Program will be investigated by the Local MBE & FBE Liaison Officer and resolution of same included in periodic reports.

13. Additional Rules and Regulations. The Local MBE & FBE Liaison Officer may, with the approval of the City Manager, promulgate additional rules and regulations not inconsistent with this resolution or any Federal or State Law, regulation or grant requirement.

14. Local MBE & FBE Program Period. This Local MBE & FBE Program shall be effective for the remainder of the current fiscal year and shall continue for subsequent fiscal years unless amended or rescinded by the council. The council shall annually review the Local MBE & FBE Program including, but not limited to, its overall goals.

This resolution shall be in full force and effect immediately upon passage thereof.

Requested by:

R-86-10 __s/_____ _____s/_____
MAYOR

Approved by:

_____s/_____
City Manager

ATTEST:

Approved as to form:

_____s/_____
City Attorney

___s/_____
City Clerk

Introduced ___June 4, 1986_____

_____

Final Reading ___June 4, 1986_____

RESOLUTION

Amending Resolution $-86-10 Relating to Minority and
Female Business Enterprise Program

Whereas, the United State Supreme Court has rendered a decision which affects certain provisions of Resolution R-86-10 adopted on June 4, 1986, and it appears that modifications are necessary to preserve the validity of permissible concepts therein, NOW, THEREFORE,

BE IT RESOLVED by the Mayor and Council this 2nd day of August, 1989, that Resolution R-86-10 adopted on June 4, 1986, is hereby amended as follows:

1. Section 7b. is amended to read:

"All prime contractors on procurements costing $25,000.00 or more will be requested to provide a list of all minority contractors contacted and result thereof."

2. Section 7c. is amended to read:

"Suggested bid specifications will request prime contractors to make reasonable efforts to utilize local MBE's and FBE's."

3. Section 9. Procurement Goals. Is amended to read:

"Suggested levels of MBE and FBE participation shall be developed by the City Manager and reported to City Council."

4. Section 10. Contract Goals. is amended to read:

"The City Manager shall suggest contract goals for local MBE participation on each prime contract involving $25,000.00 or more and the bidders shall be encouraged to make a good faith effort to meet or exceed the suggested goals."

Requested by:

s/_____ s/_____

Approved by:

s/_____

City Manager ATTEST:

Approved as to form:

s/_____

City Attorney s/_____

City Clerk

Introduced _____

_____

Final Reading _____

RESOLUTION

Amending Resolution R-86-10 Relating to Minority and
Female Business Enterprise Program

BE IT RESOLVED by the Mayor and Council this 19th day of December, 1990, that Resolution R-86-10 adopted on June 4, 1986, is hereby amended as follows:

Section 7c. is amended to read:

All bid specifications will require prime contractors to make good faith efforts to utilize local MBE's and FBE's.

Good faith efforts can be demonstrated by the following:

(1) Attending pre-solicitation or pre-bid meetings that are scheduled by the City to inform M/FBE's of contracting, subcontracting and supply opportunities.

(2) Advertising in general circulation, trade association, and minority-focus media concerning subcontracting opportunities.

(3) Providing written notice to a reasonable number of specific M/FBE's that their interest in the contract is being solicited, in sufficient time to allow the M/FBE's to participate.

(4) Following up initial solicitations of interest by contacting M/FBE's to determine with certainty whether the M/FBE's are interested.

(5) Identifying and selecting portions of the work to be performed by M/FBE's in order to increase the likelihood of M/FBE participation (including, where appropriate, breaking down contracts into economically feasible units to facilitate M/FBE participation).

(6) Providing interested M/FBE's with equal access to specifications, plans, and requirements of the contract.

(7) Negotiating fairly with interested M/FBE's, not rejecting F/FBE's as unqualified without sound reasons based on a thorough investigation of their capabilities.

(8) Using the services of available minority community organizations, minority contractors' groups, local, state and federal minority business assistance offices, and other organizations that provide assistance in the recruitment and placement of M/FBE's.

(9) Assisting interested M/FBE's in obtaining bonding, lines of credit or insurance required by the apparent low bidder.

Requested by:

_____ _____

Approved by: MAYOR

_____
City Manager

ATTEST:

Approved as to form:

_____
City Attorney

_____
City Clerk

Introduced _December 19,1990 _____

_____

Final Reading _December 19. 1990____

PART 24: SPECIFICATIONS FOR PRESSURE REDUCING VALVE HOUSING
TABLE OF CONTENTS

Paragraph	Description	Page No.
24.1	General	24-1
24.2	Building Excavation and Fill	24-1
24.3	Floor	24-1
24.4	Masonry work	24-2
24.5	Portland Cement Concrete	24-3
24.6	Reinforcing Steel	24-3
24.7	Horizontal Joint Reinforcement	24-3
24.8	Anchors and Ties	24-4
24.9	Fastenings	24-4
24.10	Mortar and Grout Mixing	24-4
24.11	Erection Conditions	24-4
24.12	Metal Doors and Frames	24-5
24.13	Finish Hardware	24-6
24.14	Miscellaneous Metal Work	24-6
24.15	Painting	24-7

CITY OF COLUMBIA REGULATIONS
PART 24
SPECIFICATIONS FOR PRESSURE REDUCING VALVE HOUSING

24.1 GENERAL

24.1.1 The work under this section covers construction of the building used to house the pressure reducing valve assembly. Construction detail drawings PRV #1 through PRV #3 attached hereto are a part of these specifications.

24.2 BUILDING EXCAVATION AND FILL

24.2.1 The extent of Building Excavation and Fill shall extend a minimum of two (2) feet beyond the building perimeter.

24.2.2 Site Preparation and Excavation

24.2.2.1 Site preparation will include the removal of all surface vegetation, organic laden topsoils, existing fill, and any other unsuitable surface materials. After stripping, the exposed subgrade will be evaluated by the Engineer to confirm that all unsuitable materials have been removed.

24.2.3 Grading

24.2.3.1 Grading shall cover the building site and its surrounds.

24.2.4 Placement and Compaction

24.2.4.1 Place backfill materials in layers not more than 8” in loose depth for materials compacted by heavy compaction equipment and not more than 4” in loose depth for material compacted by hand-operated tampers.

24.2.4.2 Before compaction, moisten or aerate layer as necessary to provide the optimum moisture content of the soil material. Compact each layer to the required percentage of maximum dry density or relative dry for each area classification. Do not place backfill material in surfaces that are muddy.

24.2.4.3 Place backfill materials evenly adjacent to structures, to the required elevations. Take care to prevent, wedging action of the backfill against structures by carrying the material uniformly around the structure to approximately the same elevation in each lift.

24.2.5 Compaction Requirements

24.2.5.1 Compact soil to not less than 95 percent of a soils maximum dry density as compared to the Standard Proctor Compaction Test (ASTM D698-70). The Contractor will be responsible for all testing required to assure the above compaction requirements are met.

24.3 FLOOR – site shall be graded and leveled; floor shall be a concrete slab reinforced with wire mesh cast on a layer of crushed stone bedding. A vapor barrier shall be installed under the concrete slab.

24.4 MASONRY WORK: The work includes furnishing all materials and equipment and performing all labor necessary to construct the masonry work indicated or specified herein. Masonry work shall be coordinated with the work of other trades.

24.4.1 Materials: Cement, lime and other cementitious materials shall be delivered to the site and stored in unbroken bags, barrels, or other approved containers, plainly marked and labeled with the manufacturer's names and brands. Such materials shall be stored in dry, weathertight sheds or enclosures, and shall be stored and handled in a manner which will prevent the inclusion of foreign materials and damage by water or dampness. Masonry units shall be handled with care to avoid chipping and breakage. Materials stored on newly constructed floors shall be stacked in such a manner that the uniformly distributed loading does not exceed 50 psf. Masonry materials shall be properly protected from contact with the earth and exposure to the weather, and shall be kept dry until used. Materials containing frost or ice, and cement and lime which have been wetted by rain or other water prior to incorporation in mortar, shall not be used.

24.4.1.1 Concrete Masonry Units shall be of modular dimensions, and shall be either air, water or steam cured. Units shall be stored before use a minimum of 28 days for air cured units; 10 days for steam or water cured units; and 3 days for units cured with steam at a pressure of 120 to 150 psi and at a temperature of 350 to 365 degrees F for at least 5 hours. Surfaces of units which are to be left exposed in the finished work, or which are to be painted, shall be relatively smooth with a uniform texture. Surfaces of units to receive plaster or stucco shall be sufficiently rough to provide a suitable bond.

24.4.1.2 Hollow Load-Bearing Units: Units shall be made with normal weight aggregates and shall conform to ASTM C90. Grade N-I units shall be provided for exterior and foundation walls.

24.4.1.3 Portland Cement Mortar – Portland Cement Mortar shall consist of Portland cement, fine aggregate and water.

24.4.1.3.1 Ingredients – All materials for mortar shall conform to requirements of the SCDHPT Standard Specifications where applicable and the following specification:

24.4.1.3.1.1 Portland Cement – ASTM Designation C150; SCDHPT Standard Specifications Section 501, Concrete Materials.

24.4.1.3.1.2 Sand – SCDHPT Standard Specifications Section 501 ASTM Designation C144, 501.04 Fine Aggregate; Section 501, Concrete Materials.

24.4.1.3.1.3 Water – SCDHPT Standard Specifications Section 501.06 Water; Section 501, Concrete Materials:

24.4.1.3.2 All equipment, tools and machinery used in mixing and handling mortar shall be approved by the Engineer.

24.4.1.3.3 Composition – The proportions of Portland cement, fine aggregate and water shall be such as to produce a plastic mortar. The workability shall be consistent with the type of work for which it is used in order to secure the best results.

24.4.1.3.3.1 The mortar are specified for the several types of work, shall be proportioned one part cement and three parts fine aggregate.

24.4.1.3.3.2 Proportioning of batches shall be by volume unless otherwise shown on the plans or specified in the Special Provisions. One sack of cement weigh in ninety-four (94) pounds shall be considered one (1) cubic foot. Correction for bulking of the fine aggregate shall be made as directed by the Engineer.

24.4.1.3.4 Admixture

24.4.1.3.4.1 Lime – Lime which has been thoroughly air slaked may be added in quantities up to ten (10) percent of the cement content of the mix to increase the workability of the mortar, upon approval of or at the direction of the Engineer. Lime shall conform to ASTM Specifications, Designation C141.

24.4.1.3.4.2 Commercial Admixtures – Commercial admixtures to increase the workability of mortar or concrete will not be used unless specifically approved in writing by the Engineer.

24.5 PORTLAND CEMENT CONCRETE – Portland cement concrete for structures shall conform to Section 701 of the SCDHPT Standard Specification for Highway Construction, latest edition.

24.5.1 The 28-day compressive strength of concrete shall be not less than 3000 psi which shall be demonstrated by standard compressive tests. Each test shall consist of duplicate cylinders and not less than one test shall be made for each 50 cubic yards. One cylinder of each pair shall be tested after seven days and shall have a compressive strength of not less than 2000 psi.

24.5.2 Concrete shall contain not less than six sacks of cement per cubic yard and not more than six gallons of water per sack of cement, including water contained in aggregate.

24.6 REINFORCING STEEL – Reinforcing steel shall be of new billet steel, intermediate grade, made by the open hearth process, conforming to the requirement of the "Standard Specifications for Billet Steel Concrete Reinforcement Bars", Serial Designation C15-3 of the ASTM Designation A615-80. In addition to the reinforcing indicated on the plans, the Contractor shall furnish all necessary support bars, tie bars, etc., required for properly supporting and spacing the bars in the forms. The reinforcement will be subject to field inspection for rust, shape and dimensions.

24.6.1 Wire mesh used as reinforcement shall be of the size and spacing shown on the plans. The wire mesh shall comply with ASTM-A-185.

24.7 HORIZONTAL JOINT REINFORCEMENT – Joint reinforcements shall be fabricated from cold drawn steel wire conforming to ASTM Specification A 82.

The wire shall be either copper-clad steel or zinc-coated after fabrication. Reinforcement shall consist of two or more parallel longitudinal wires, not less than 0.1620 inch in diameter, weld connected with cross wires not less than 0.1483 inch diameter. The out-to-out spacing of the longitudinal wires shall be 1-1/2 to 1-3/4 inches less than the actual width of the wall. The distance between welded contacts of cross wires with each longitudinal wire shall not exceed 6 inches for smooth wire and 16 inches for deformed wire. Joint reinforcement shall be provided in flat sections not less than 10 feet in length, except that corner reinforcements and other special shapes may be less in length.

24.8 ANCHORS AND TIES shall be of approved designs and shall be of zinc coated steel, or of non-corrodible metal having the equivalent total strength of steel types. Zinc-coated materials shall be coated by the hot-dip process after fabrication.

24.9 FASTENINGS – Suitable galvanized bots or other approved metal fastenings shall be provided as necessary.

24.10 MORTAR AND GROUT MIXING – Materials shall be measured in approved containers, which will insure that the specified proportions of materials will be controlled and accurately maintained during the progress of the work. Measuring materials with shovels will not be permitted. Unless specified otherwise, mortar and grout shall be mixed in proportions by volume. The aggregates shall be introduced and mixed in such a manner that the materials will be distributed uniformly throughout the mass. A sufficient amount of water shall be added gradually and the mass further mixed, not less than 3 minutes, nor more than 5 minutes, until a mix of the plasticity necessary for the purposes intended is obtained. The materials shall be machine-mixed in approved mixers, of the type in which the quantity of water can be controlled accurately and uniformly. Hand mixing may be used only when specifically approved. Mortar boxes, pans and/or mixer drums shall be kept clean and free of debris or dried mortar. The mix shall be used before the initial setting of the cement has taken place; retempering of mortar or grout in which cement has started to set will not be permitted. Anti-freeze compounds, salts, or any other substance used to lower the freezing point of the mix will not be permitted. Mortar joints shall be 3/8 inch.

24.10.1 Mortar for Block Work – The color of cement and sand used in mortar for exposed work shall produce, without the admixture of any coloring matter, a mortar of uniform shade.

24.11 ERECTION CONDITIONS – Masonry shall not be laid when the air temperature is below 40° F. on a falling thermometer or when it appears probable that temperatures below 40° will be encountered before the mortar has set unless adequate means are provided for protecting the work from freezing. Work will not be permitted with, or no, frozen materials. Scaffolding shall be inspected regularly and shall be amply strong, well braced and securely tied in position. Overloading of scaffolding will not be permitted. Tops of exposed walls and partitions shall be covered with a waterproof membrane, well secured in place, when not being worked on.

24.11.1 Workmanship – Masonry walls shall be carried up level and plumb all around. One section of the walls shall not be carried up in advance of the others unless specifically approved. Unfinished work shall be stepped back for joining with new work; toothing will not be permitted except where specified or specifically approved by the Engineer. Heights of masonry shall be checked with an instrument at each floor, and at sills and heads of openings, to maintain the level of the walls. Masonry units shall be handled with care to avoid chipping, cracking and spalling of the work of others, shall be performed by masonry mechanics.

24.11.2 Openings and Accessories – Door and window frames, louvered openings, anchors, pipes, ducts and conduits shall be built in carefully and neatly as the masonry work progresses. Ties and anchors shall be placed accurately as shown or herein specified as the work progresses. Grouting of ties or anchors into hardened mortar or grout will not be permitted. Spaces around metal door frames shall be filled solidly with mortar. Structural steelwork, bolts, anchors, insets, plugs, ties, lintels and miscellaneous metal work specified elsewhere shall be placed in position as the work progresses.

24.11.3 Cleaning – During construction, care shall be taken continuously to keep the exposed faces clean of mortar and other stains. When mortar joints reach thumbprint hardness and are tooled, the exposed work shall be brushed with a soft fiber brush to remove adhering mortar, and a wood paddle shall be used to remove more tenacious material. Bases of walls shall be protected from splash stains by covering the adjacent round with sand, sawdust, or polyethylene. At the completion of the masonry work, holes in exposed masonry shall be pointed, and defective joints shall be cut out and tuck pointed solidly with mortar which has been retempered one to two hours after original mixing.

24.11.4 Caulking – All exterior joints where masonry abuts other construction shall be raked approximately ½ inch and filled with an approved non-staining caulking compound.

24.12 METAL DOORS AND FRAMES – All doors and frames shall be the standard products of manufacturers regularly engaged in the production of metal doors and frames.

24.12.1 Metal Louvers for Doors – Where louvers are indicated they shall be of the inverted “V’ or “Y” shaped type, about 1-1/2 inches wide across the open ends of the members, visionproof, and fixed. Louvers shall be made of furniture steel; the slats shall be installed on 1 inch centers providing a clear space of ½ inch between slats, shall prevent drafts, afford maximum air delivery, and shall admit light. Frames shall be steel channels of suitable size. The top and bottom members of all louvers shall be designed to prevent the collection of dust. They shall be secured to the doors in accordance with the manufacturer’s standard practice. A rewireable type of metal frame, screened with 18 x 12 mesh copper screen cloth, shall be fastened to the back of each louver.

24.12.2 Rustproofing – The door and frames may be given a rust-resisting treatment and letallic primer in accordance with the manufacturer’s standard practice, in lieu of

paint. Upon completion of the shop work, all marred surfaces shall be re-coated thoroughly.

24.13 FINISH HARDWARE- The work includes furnishing and installing a finish hardware necessary for the complete finish of the buildings. All hardware shall, as far as practicable, be of one manufacturer's make. Hardware for application on metal shall be made to standard templates, and the templates shall be furnished to the metal door and frame manufacturer.

24.13.1 Location – Hardware on hinged doors shall be located as follows, unless indicated or specified otherwise.

24.13.1.1 Locks – Knobs shall be installed on doors at the same height from the floor throughout the buildings. The center of door knobs shall be approximately 37 inches above the finish floor.

24.13.1.2 Hinges shall be located as follows:

24.13.1.2.1 Top Hinge – Not over 9 ¾ inches from the inside of frame rabbet at head to center of hinge.

24.13.1.2.2 Bottom Hinge – Not over 10-3/8 inches from finished floor to center of hinge.

24.13.1.2.3 Center Hinge – Midway between top and bottom hinges.

24.13.2 Keys – Two tagged keys shall be furnished for each lock. All entrance doors to the building shall be keyed alike.

24.14 MISCELLANEOUS METAL WORK – The work includes furnishing all materials, labor, tools, etc., to provide the miscellaneous metal work as indicated or specified complete.

24.14.1 General Requirements- Steel and iron shall be standard, well finished, structural shapes, or commercial grade, bar steel or bar iron. Steel pipe shall be standard weight. Welding shall conform to applicable requirements of 1.0-63 of the American Welding Society. All finished and/or machined faces shall be true to line and level. Structural steel shall conform to ASTM A 36-67. Rolled shapes shall conform to the dimensions and weights of Regular Series Shapes of the AISC.

24.14.2 Workmanship and Finish shall be equal to the best practice of modern shops for the respective work. Exposed surfaces shall have smooth finish and sharp, well defined lines and arises. Sections shall be well formed to shape and size with sharp lines and angles; curved work shall be sprung evenly to curves. All necessary rabbets, lugs and brackets shall be provided so that the work can be assembled in a neat and substantial manner. Holes for bots and screws shall be drilled. Fastenings shall be concealed where practicable. Thickness of metal details of assembly and supports shall provide ample strength and stiffness. Joints exposed to the weather shall be formed to exclude water. Metal work shall be countersunk properly to receive hardware and provided with the proper bevels and clearance. Work shall be fabricated and installed in a manner that will insure

rigidity and will provide close fittings of sections. Cutting shall be done by shearing, sawing or flame cuttings; if flame cut, the metal shall be ground back to smooth sound material.

24.14.3 Anchors, Bolts and Miscellaneous Fastenings shall be provided where indicated, where necessary for securing work in the place, and for anchoring machines and other mechanical and electrical equipment in place. Sizes and spacing of anchors and bolts not specified or otherwise indicated shall be as required for their purpose. All anchor bolts shall be cadmium plated steel.

24.14.4 Inserts and Sleeves – Inserts of suitable and approved type shall be provided where necessary for the support of piping, mechanical equipment or apparatus, or other work.

24.15 PAINTING – The work includes providing all labor, material and equipment for field painting doors and vents. Painting of an item which has a factory finish will not be required, unless the finish has been damaged. Painting shall be done at such times as the Contractor and Engineer may agree upon in order that dust-free and neat work be obtained. All painting shall be done strictly in accordance with the manufacturer's instructions and shall be performed in a manner satisfactory to the Engineer.

24.15.1 Preparation of Surface – All surfaces to be painted shall be prepared in a workmanship like manner with the objective of obtaining a smooth, clean and dry surface. No painting shall be done before the prepared surfaces are approved by the Engineer.

24.15.1.1 Metal – Rust, dust and scale, as well as all other loose or foreign substances, shall be removed by cleaning, wire-brushing, chipping or sand-blasting. Cleaned metal shall be primed or painted, as specified, immediately after cleaning to prevent new rusting.

24.15.2 Quality of Paint – The paint products shall be approved by the Engineer.

24.15.2.1 Colors where not specified shall be as selected by the Engineer. All materials shall be brought to the job site in the original sealed and labeled containers of the paint manufacturer, and shall be subject to inspection by the Engineer.

24.15.3 Application of Paint – The painter shall apply each coating at the rate specified for brush application by the manufacturer. If material has thickened or must be diluted for application by spraygun, the coating shall be built up to the same film thickness achieved with undiluted material. In other words, one gallon of paint as originally furnished by the manufacturer must not cover a greater square foot area when applied by spraygun than when applied unthinned by brush.

24.15.4 Thinners – Where thinning is necessary, only the products of the manufacturer furnishing the paint, and for the particular purpose, shall be allowed, and all such thinning shall be done strictly in accordance with the manufacturer's instructions, as well as with the full knowledge and approval of the Engineer.

24.15.5 Painting Schedule – All surfaces to be painted shall be finished in accordance with the following schedule:

24.15.5.1 All exposed ferrous metals, including doors, vents, etc., shall be painted as follows:

24.15.5.1.1 Shop Priming – All steel and iron shall receive a priming coat of approved quality.

24.15.5.1.2 Field Priming – Wherever the priming coat is damaged, the metal shall be cleaned and touched up, using same material as shop prime.

24.15.5.1.3 Finish Coats – Two coats of approved Metal Paint.

PRV HOUSING - PILASTER DETAIL

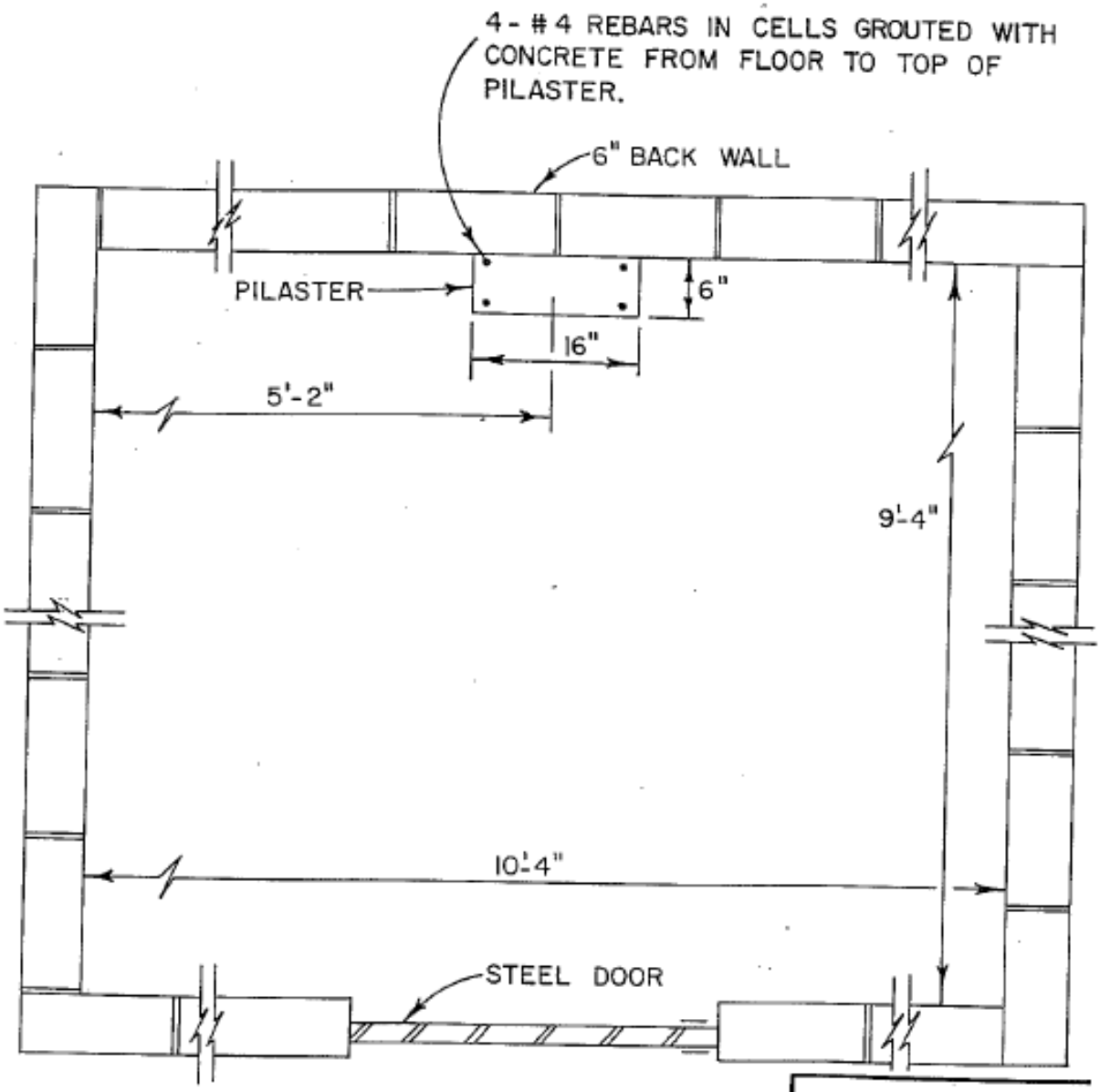

PLAN VIEW

SOUTH CAROLINA REGISTERED PROFESSIONAL ENGINEER NO. 10015 DAVID A. JOHNSON

David A. Johnson 10-14-86

CITY ENGINEER

DEPARTMENT OF UTILITIES & ENGINEERING

DATE: SEPT. 23, 1986

DETAIL PRV # 1

PRV HOUSING
HOIST BEAM & BEARING DETAIL

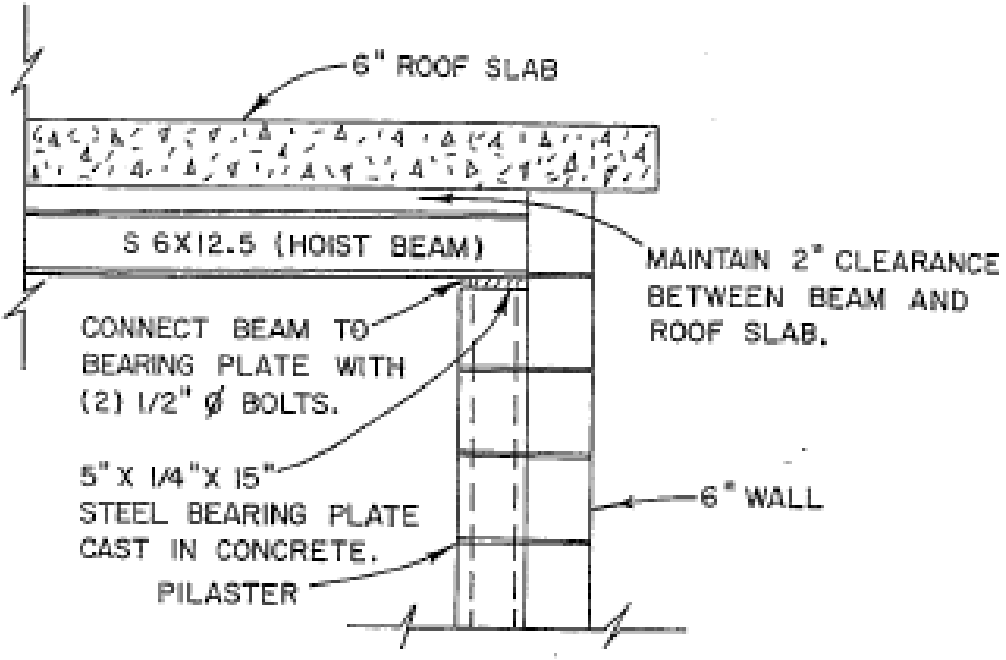

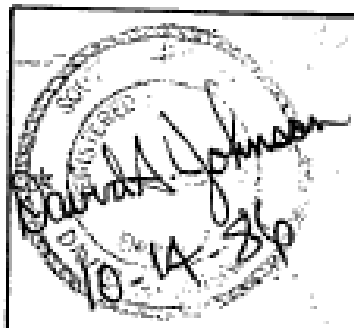

CITY ENGINEER

DEPARTMENT OF UTILITIES & ENGINEERING

DATE: SEPT. 24, 1986

DETAIL PRV # 2

PRV HOUSING

LINTEL & HOIST BEAM DETAIL

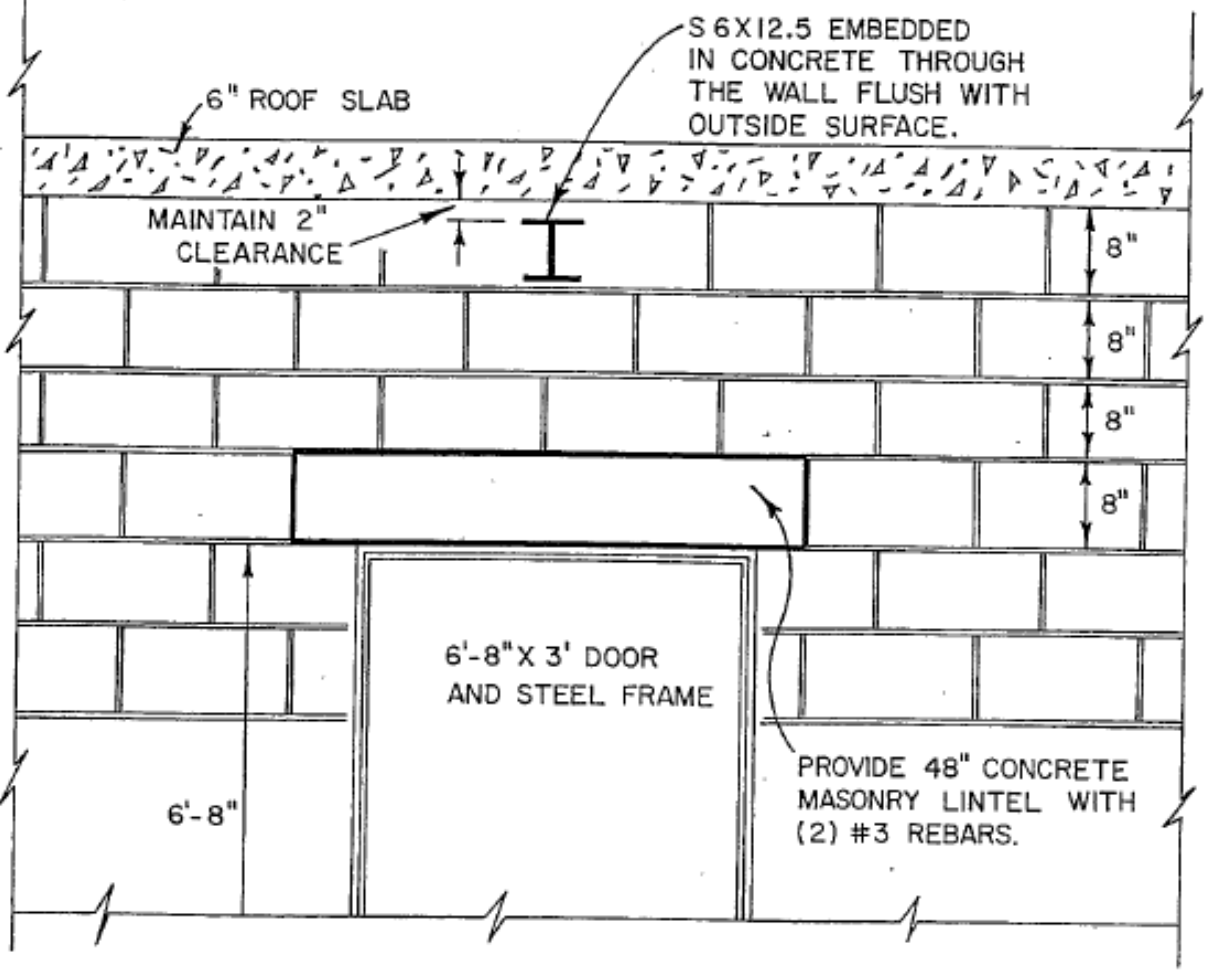

ELEVATION VIEW

David Johnson
10-14-86

CITY ENGINEER

DEPARTMENT OF UTILITIES & ENGINEERING

DATE: SEPT. 25, 1986

DETAIL PRV # 3

PART 25: SPECIFICATIONS FOR ALTITUDE VALVE VAULT
TABLE OF CONTENTS

Paragraph	Description	Page No.
25.1	General	25-1
25.2	Materials	25-1
25.3	Concrete Masonry Work	25-3
25.4	Altitude Valve Vault Covers	25-4

CITY OF COLUMBIA REGULATIONS
PART 25
SPECIFICATIONS FOR ALTITUDE VALVE VAULT

25.1 GENERAL

25.1.1 The work under this section covers construction of an underground vault to house an altitude valve, a check valve and miscellaneous valves and fittings.

25.2 MATERIALS

25.2.1 Portland Cement Concrete

25.2.1.1 Portland cement concrete for structures shall conform to Section 701 of the SCDHPT Standard Specifications for Highway Construction, latest edition.

25.2.1.2 The 28-day compressive strength of concrete shall be not less than 3000 psi which shall be demonstrated by standard compressive tests. Each test shall consist of duplicate cylinders and not less than one test shall be made for each 50 cubic yards. One cylinder of each pair shall be tested after seven days and shall have a compressive strength of not less than 2000 psi.

25.2.1.3 Concrete shall contain not less than six sacks of cement per cubic yard and not more than six gallons of water per sack of cement, including water contained in aggregate.

25.2.2 Reinforcing Steel – Reinforcing steel shall be of new billet steel intermediate grade made by the open hearth process, conforming to the requirement of the "Standard Specification C15-33 of the ASTM Designation A615-80. In addition to the reinforcing indicated on the plans, the Contractor shall furnish all necessary support bars, tie bars, etc, required for properly supporting and spacing the bars in the forms. The reinforcement will be subject to field inspection for rust, shape and dimensions.

25.2.3 Horizontal Joint Reinforcement: Joint reinforcements shall be fabricated from cold drawn steel wire conforming to ASTM Specification A82. The wire shall be either, copper- clad steel, or zinc-coated after fabrication. Reinforcement shall consist of two or more parallel longitudinal wires, not less than 0.1620-inch in diameter, weld connected with cross wires, not less and 0.1483-inch diameter. The out-to-out spacing of the longitudinal wires shall be 1-1/2 to 1-3/4 inches less than the actual width of the masonry. The distance between welded contacts of cross wires with each longitudinal wire shall not exceed 6-inches for smooth wire and 16-inches for deformed wire. Joint reinforcement shall be provided in flat sections, not less than 10 feet in length, except that corner reinforcements and other special shapes may be less in length.

25.2.4 Concrete Masonry Units

25.2.4.1 Concrete Masonry Units shall be of modular dimensions, and shall be either air, water or steam cured. Units shall be stored before use a minimum of 28 days for air cured units; 10 days for steam or water cured units; and 3 days for units cured

with steam at a pressure of 120 to 150 psi and at a temperature of 350 to 365 degrees F for at least 5 hours. Surfaces of units which are to be left exposed in the finished work, or which are to be painted, shall be relatively smooth with a uniform texture. Surfaces of units to receive plaster or stucco shall be sufficiently rough to provide a suitable bond.

25.2.4.2 Hollow Load-Bearing Units: Units shall be made with normal weight aggregates and shall conform to ASTM C90. Grade N-I units shall be provided for exterior and foundation alls.

25.2.5 Portland Cement Mortar – Portland Cement Mortar shall consist of Portland cement, fine aggregate and water.

25.2.5.1 Ingredients – All materials for mortar shall conform to requirements of the SCDHPT Standard Specifications where applicable and the following specifications:

25.2.5.1.1 Portland Cement – ASTM Designation C150, SCDHPT Standard Specifications, Section 501, Concrete Materials.

25.2.5.1.2 Sand – ASTM Designation C144; SCDHPT Standard Specifications Section, 501.04 Fine Aggregate; Section 501, Concrete Materials.

25.2.5.1.3 Water – SCDHPT Standard Specifications Section, 501.06 Water; Section 501, Concrete Materials.

25.2.5.2 All equipment tools and machinery used in mixing and handling mortar shall be approved by the Engineer.

25.2.5.3 Composition – The proportions of Portland cement, fine aggregate and water shall be such as to produce a plastic mortar. The workability shall be consistent with the type of work for which it is used in order to secure the best results.

25.2.5.3.1 The mortar as specified for the several types of work, shall be proportioned one part cement and three parts fine aggregate.

25.2.5.3.2 Proportioning of batches shall be by volume unless otherwise shown on the plans or specified in the Special Provisions. One sack of cement weighing ninety-four (94) pounds shall be considered one (1) cubic foot. Correction for bulking of the fine aggregate shall be made as directed by the Engineer.

25.2.5.4 Admixture

25.2.5.4.1 Lime – Lime which has been thoroughly air slaked may be added in quantities up to ten (10) percent of the cement content of the mix to increase the workability of the mortar, upon approval of or at the direction of the Engineer. Lime shall conform to ASTM Specifications, Designations C 141.

25.2.5.4.2 Commercial Admixtures – Commercial admixtures to increase the workability of mortar or concrete will not be used unless specifically approved in writing by the Engineer.

25.2.6 All other materials, not herein specified shall conform to applicable sections of SCDHPT Standard Specifications for Highways Construction, latest edition.

25.3 CONCRETE MASONRY WORK

25.3.1 Delivery and Storage: Cement, line and other cementitious materials shall be delivered to the site and stored in unbroken bags, barrels, or other approved containers, plainly marked and labeled with the manufacturer's names and brands. Mortar materials shall be stored in dry weathertight sheds or enclosures, and shall be stored and handled in a manner which will prevent the inclusion of foreign materials and damage by water or dampness. Masonry units shall be handled with care to avoid chipping and breakage. Masonry materials shall be properly protected from contact with the earth and exposure to the weather, and shall be kept dry until used. Materials containing frost or ice, and cement and lime which have been wetted by rain or other water prior to incorporation in mortar, shall not be used.

25.3.2 Materials: Masonry work of the types indicated shall be provided. The source of supply for materials which will affect the appearance of the finished work shall not be changed after the work has started.

25.3.3 Erection Conditions: Masonry shall not be laid when the air temperature is below 40 degrees F on a falling thermometer, or when it appears probable that temperatures below 40 degrees F will be encountered before the mortar has set, unless adequate means are provided for protecting the work from freezing. Work will not be permitted with or on frozen materials. Masonry work may be started at 34 degrees F on a rising thermometer. Scaffolding shall be inspected regularly and shall be amply strong, well braced and securely tied in position. Overloading of scaffolding will not be permitted.

25.3.4 Workmanship: Masonry walls shall be carried up level and plumb all around. One section of the walls (other than reinforced walls) shall not be carried up in advance of the others, unless specifically approved. Unfinished work shall be stepped back for joining with new work. Toothing will not be permitted, except where specified or specifically approved. Masonry units shall be handled with care to avoid chipping, cracking and spalling of faces and edges. Drilling, cutting, fitting and patching to accommodate the work of others, shall be performed by masonry mechanics. Masonry shall be cut with masonry saws in exposed work, where directed. Chases of approved dimensions for pipes and other purposes shall be provided where indicated or necessary.

25.3.5 Erection

25.3.5.1 Mortar and Grout Mixing: Materials shall be measured in approved containers, which will insure that the specified proportions of materials will be controlled and accurately maintained during the progress of the work. Measuring materials with shovels will not be permitted. Unless specified otherwise, mortar and grout shall be mixed in proportions by volume. The aggregates shall be introduced and mixed in such a manner that the materials will be distributed uniformly throughout the mass. A sufficient otherwise, mortar and grout shall be mixed in proportions by volume. The aggregates shall be introduced and mixed in such a

manner that the material will be distributed uniformly throughout the mass. A sufficient amount of water shall be added gradually and the mass further mixed, not less than 3 minutes, until a mix of the plasticity necessary for the purposes intended is obtained. The materials shall be machine mixed in approved mixers, of the type in which the quantity of water can be controlled accurately and uniformly. (Hand mixing may be used, only when specifically approved.) Mortar boxes, pans, and/or mixer drums shall be kept clean and free of debris or dried mortar. The mix shall be used before the initial setting of the cement has taken place. Anti-freeze compounds, salts, or any other substance used to lower the freezing point of the mix, will not be permitted. Mortar joints shall be 3/8 inch.

25.3.5.2 Concrete Masonry Unit Work: The first course of concrete masonry units shall be laid in a full bed of mortar for the full width of the units; the succeeding courses shall be laid with broken joints. The bed joints of concrete masonry unit shall be formed by applying the mortar to the entire top surfaces of the inner and outer face shells, and the head joints shall be formed by applying the mortar for a width of about one inch to the ends of the adjoining units laid previously. The mortar for joints shall be smooth, not furrowed, and shall be of such thickness that it will be forced out of the joints as the units are being placed in position. Where anchors, bolts and ties occur within the cells of the units, such cells shall be filled with mortar or grout as the work progresses. Metal lath shall be placed under cells before they are filled. Concrete brick shall be used for bonding walls, working out the coursing, toping out walls under sloping slabs, distributing concentrated loads, backing brick headers, and elsewhere as required. Concrete masonry units shall not be dampened before or during laying.

25.4 ALTITUDE VALVE VAULT COVER

25.4.1 Vault Cover: The vault's cover shall be ¼" floor plate, non-skid steel, with two hinged inspection lids to be placed as directed by the engineer. The plate shall be of adequate dimensions to completely cover the vault.

ALTITUDE VALVE VAULT DETAIL

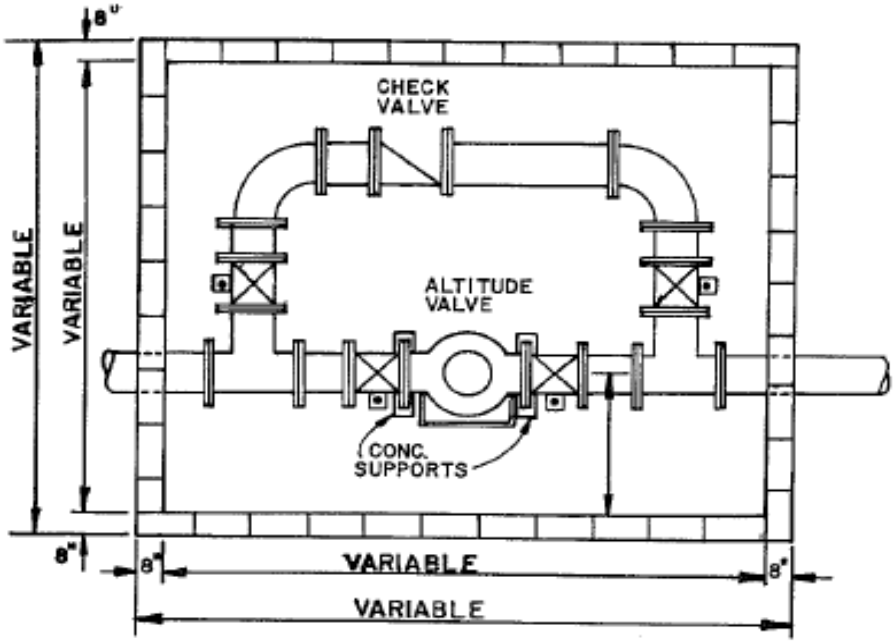

PLAN VIEW

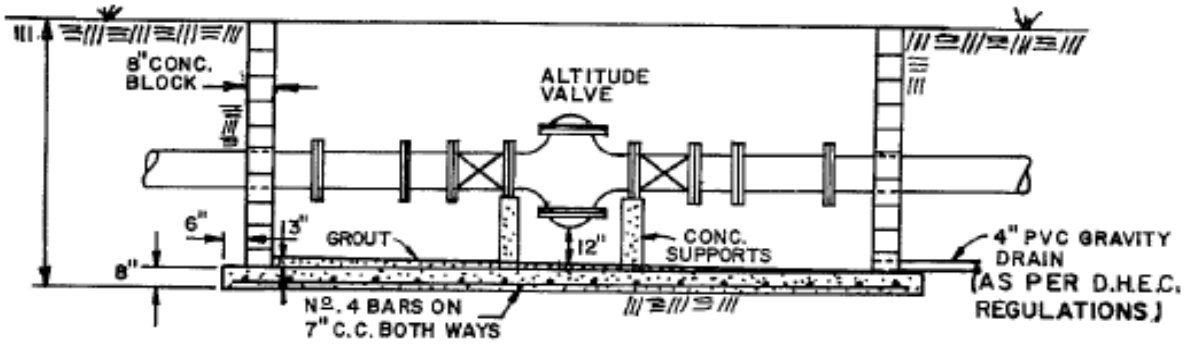

ELEVATION VIEW

David A. Johnson
10-13-86
CITY ENGINEER

DATE: 10-13-86

DEPARTMENT OF UTILITIES AND ENGINEERING, COLUMBIA, S.C.

STANDARD DETAIL AV NO. 1

PART 26: PROCEDURES FOR EASEMENT ACQUISITION
TABLE OF CONTENTS

Description	Page No.
Procedures	26-1

CITY OF COLUMBIA REGULATIONS
PART 26
PROCEDURES FOR EASEMENT ACQUISITION

1. **Prepare separate easement plats on 8 ½" x 14" paper for each easement required**.

2. **Show a north arrow**.

3. **Show a vicinity map**.

4. **Show a scale**. (Optional)

5. **Identify property lines**.

6. **Identify property (ies) with correct tax map number (s)** and latest revision date (s) of the tax map sheet (s) from the most current tax maps; i.e. 2010 Edition.

7. **Identify current property owner (s)**, with now or formerly or (n/f) in front of the name (s), and the property owner's mailing address.

8. **Identify roads** (by both name and road number) and label road right-of-way widths.

9. **Identify any major landmarks**, i.e., rivers, railroads, transmission line rights-of-way, etc.

10. **Label** (i.e., 10' exclusive City of Columbia water main easement) and back-shade permanent, exclusive easement (s) to be obtained and show easement length (s).

11. **Calculate and label the total acreage** of permanent easement (s) to be obtained.

12. **Denote any temporary construction easements**, including bore pits, with dashed lines and label (i.e., 15' temporary construction easement).

13. **Show tie line distance (s)** from property corner (s) to easement's beginning and/or ending points and to any turn (s) whenever the easement does not extend parallel and adjoining a road right-of-way.

14. **Show a centerline** and centerline distance on all permanent easements.

15. **Show any permanent encroachment (s)** within the easement area, such as billboard signs, sheds, etc. Do not show mailboxes and trees. Specify whether the encroachment may remain or must be removed for the utility construction.

16. **Identify project number** (City file number for developer projects or City CIP number for City projects) and a description of project within the title block.

17. **Identify sheet number (s) on easements plat (s)**, i.e., Sheet 1 of 1, if only one easement is required for the project or Sheet 1 of 6, Sheet 2 of 6, Sheet 3 of 6, Sheet 4 of 6, Sheet 5 of 6 and Sheet 6 of 6, if six easements are required for the project.

PART 27: PROCEDURES FOR ACCEPTANCE OF EXISTING STREETS
TABLE OF CONTENTS

Paragraph	Description	Page No.
27.1	Purpose	27-1
27.2	Scope	27-1
27.3	Design and Construction Standards	27-1
27.4	Procedures	27-1

CITY OF COLUMBIA REGULATIONS
PART 27
PROCEDURES FOR ACCEPTANCE OF EXISTING STREETS

27.1 PURPOSE - To establish procedures for the acceptance of existing streets that were constructed to be privately owned and maintained, but whose Owner now wants to transfer ownership to the City.

27.2 SCOPE – These procedures shall apply to all streets that were proposed and constructed as privately owned and maintained streets outside the jurisdiction and inspection of the City Engineer. All readers are cautioned that the current Subdivision Regulations require that any new street must meet the City's standards for design and construction, whether public or private. These procedures are to be construed as a mechanism for avoiding this requirement.

27.3 DESIGN AND CONSTRUCTION STANDARDS – In order to be considered for acceptance by the City, all streets must meet the City's standards for design and construction as of the date they are offered. Or, the Owner must, at his sole expense, take those actions necessary to bring the street into compliance with these standards before acceptance by the City.

27.4 PROCEDURES

27.4.1 The Owner must furnish the city with properly certified record drawings and specifications. These plans shall be in electronic format per Part 28 of this manual and mylar form and must contain plan view, profile of the centerline, cross sections and construction details. In addition, he must furnish a recordable boundary survey plat showing the right-of-way to be conveyed and the location of improvements within the right-of-way. These items should be accompanied by a letter stating the owner's formal request that the City accept the street.

27.4.2 The City Engineer in conjunction with the Public Works Director will review the record drawings and specifications, and conduct a physical inspection of the premises. The Owner shall furnish such additional information, including laboratory test results of the materials, as the City Engineer may require to determine the actual conditions above and below the surface.

27.4.3 When the City Engineer has determined that the street meets City specifications he will notify the Administrative Division of the Department of Utilities and Engineering.

27.4.4 The Administrative Division will furnish the Legal Department with necessary plats, metes and bounds description and other information necessary to prepare a deed to real estate. When the deed is returned from the Legal Department, it will be forwarded to the Owner for execution.

27.4.5 When the executed deed is received, it will be transmitted to the Legal Department for final legal review, consideration by City Council as appropriate and recording.

27.4.6 Upon notice that the deed has been sent for recording by the Legal Department, the Administrative Division shall notify the Owner and the Street Division that henceforth the City will own and maintain the street.

PART 28: COC DIGITAL DATA SUBMISSION STANDARDS
TABLE OF CONTENTS

Paragraph	Description	Page No.
28.1	Standards	28-1
28.2	Appendix A	28-4
28.3	Appendix B	28-6

CITY OF COLUMBIA REGULATIONS
PART 28
COC DIGITAL DATA SUBMISSION STANDARDS

Updated: 02/16/2016

28.1 STANDARDS

Purpose: The purpose of this document is to provide a set of standards for digital data that is submitted to the City of Columbia. The need for these standards has arisen due to the universal use of different technologies that aide the process of planning and development design review. Geographic Information Systems (GIS) and Computer Aided Drafting (CAD) have become prominent technologies that are used in the review process.

These standards are designed to assist in efficiently transferring data among consultants, the city, and other agencies (i.e. Richland/Lexington County, State, Federal, etc). In addition to making data more easily transferrable, these standards will also help to streamline the process in which data is entered into the GIS. This is extremely important because the City of Columbia is becoming more geocentrically focused in its approach to asset management. This inherently means that the city depends upon complete and spatially accurate data. The standards within this document will help to maintain the spatial accuracy of city assets. Much of this document is adopted from Richland County digital data submission standards as to make data more easily transferrable between the City of Columbia and the county since both entities have interests in each other's activities.

In addition to standard paper documents, any engineering plan that is submitted to the City of Columbia must have the additional digital files submitted:

- ✓ A completed original CAD drawing in .dwg or .dxf format. This file shall include all layers and graphic elements included in the submitted paper document (text, legend, scale, labels, etc.). This file will include features classified in the standard layers defined in Appendix A. If the drawing contains layers that are not included in Appendix A, then a list of these layers shall also be submitted (ASCII text file labeled: 'xlyrspec.txt'). The completed CAD drawing file should contain text in standard fonts that can be read without third-party software.

- ✓ A metadata text file containing information listed in Appendix B. This file includes submittal information as well as technical parameters that may be necessary to review if problems in data conversion occur. The ASCII text file will be labeled 'metadat.txt'.

- ✓ An ASCII text file containing elevation points. When submitting plans that include surveyed ground surfaces, a separate ASCII text file containing all elevation points shall be delivered.

- ✓ When possible, a personal geodatabase shall be provided with the appropriate feature datasets and feature classes containing the collected data. The horizontal and vertical positional accuracies should be included within the attribute table of each feature class. Any attributes to be collected in the field must be agreed upon by the City of Columbia and the contractor before the contract is approved. These attributes shall be filled out as completely as possible. Any shortcomings shall be explained in a separate text file.

Additionally, digitally submitted data must meet the following requirements:

- ✓ The media on which the City of Columbia receives the data shall be stored either on a CD-ROM or DVD. The use of email and/or an FTP site will be reviewed on a case-by-case basis per the project manager. The deliverable must be labeled with: 1) a drawing title, 2) the type of drawing, 3) the submitter information, and 4) a date.

- ✓ All drawing elements shall be submitted referencing South Carolina State Plane (SCSP) Coordinates. Features in drawing files that are stored in drawing units must be translated to represent real world locations as referenced by SCSP coordinates. As specified in the SC Code of Laws Chapter 2, Title 27 (The South Carolina Coordinate Act, amended 31Mar89), elements referencing SCSP (formally identified as the South Carolina Coordinate System) will utilize the **North American Datum of 1983 (NAD83) HARN** for horizontal control and be measured in **International Feet (not US Survey Foot)**. Vertical control will reference the **North American Vertical Datum of 1988 (NAVD88)** and shall include measures using the **US Survey Foot**. The SCSP system includes a single zone identified as Federal Information Processing Standard zone 3900 (FIPS 3900). Caution must be exercised in performing all conversions involving submitted data to ensure the correct use of the International Foot. Errors in conversion can exceed four linear feet. It is not the intention of the City of Columbia to replicate legal surveys. With this in mind, control of plan features may be tied to the SCSP system using traditional surveying or GPS methods. The method employed to gain geodetic control shall be identified in the submitted 'metadata.txt' file.

- ✓ Drawing features shall include layer names as indicated in Appendix A. Features other than those thematically defined by the individual layer name/description shall not be included in that layer.

- ✓ No annotation shall be included in any feature layer and no feature shall be included in any annotation layer. Annotation for each layer shall be placed in annotation layers as specified in Appendix A.

- ✓ Closure is critical in converting drawing elements to GIS features. Parcels/lots (layer #2 PARCEL1), subdivision boundaries (layer#3: SUBDIV1), rights-of-way (layer #4: ROW1), and common areas (layer #5: COMAREA1), Buildings (layer #7: BLDG1), Pavement Edge (Layer #16: PAVEDGE1), Easements (layer #26: EAS), Building Setbacks (layer #27 EASBLD), Buffers (layer #28 BUFF), Floodplains (layer #30: FP), Floodway (layer #31: FW) Wetlands, (layer #32 WETLANDS) must be snapped closed

- ✓ No polylines or annotation shall be stored in blocks. Explode all blocks that do exist.

- ✓ All City of Columbia required layers shall be made visible prior to submission – all other layers can be turned off.

- ✓ Submitted .dxf files shall contain only complete parcel polygon features. All partial polygons (parcel boundaries) shown for reference in drawings (.dwg files) are not to be included in the PARCEL layer (Appendix A). Such features can be included in an unnamed layer in the submitted .dxf file.

- ✓ All coordinates shall be delivered in a single, comma-delimited ASCII text file. Each line of the file shall contain e*asting, northing, and elevation* values (in SCSP coordinates) for a single point as exampled below:

  Easting, Northing, Elevation
  2012374.63, 853633.30343, 447.52
  2012371.81, 853642.06532, 447.49
  2012370.56, 853651.25382, 447.62
  202369.81, 853660.04853, 448.02

- ✓ Additional layers (not identified in Appendix A) may utilize any open layer beyond the 60 reserved layers. As outlined above, a list of these layers shall also be submitted (ASCII text file labeled: 'slyrspec.txt')

28.2 APPENDIX A

Graphic File (.dxf) Specifications

Color Number	Layer Name	Feature Type	Layer Description
1	BLDG1	Polyline	Building/structure outline or footprint
2	PARCEL1	Polyline	Parcel/lot boundaries
3	SUBDIV1	Polyline	Subdivision boundaries
4	ROW1	Polyline	Rights of way delineating private/public land boundary
5	COMAREA1	Polyline	Public areas such as street islands/community entrances
6	GCP1	Point	Ground control points (existing, surveyed, or
7	POLE1	Point	Lamp poles, power poles, traffic light poles, etc.
8			
9			
10	GAS	Polyline	Gas pipe
11	ELECTR	Polyline	Electrical lines
12	TELCO	Polyline	Phone lines
13	CTVFIBR	Polyline	Cable TV and/or fiber datacom lines
14			
15			
16	PAVEDGE1	Polyline	Edge of pavement
17	CNTRLIN1	Polyline	Street/road centerlines (paved and unpaved)
18	SIDEWLK1	Polyline	Sidewalks (including ramps, if any)
19	CURB1	Polyline	Curb/gutter
20	CARPRK1	Polyline	Parking lots
21	RAIL1	Polyline	Railroads
22	HYDLIN1	Polyline	Linear hydrography, creeks/streams
23	HYDPOL1	Polyline	Polygonal hydrography, lakes/ponds
24			
25			
26	EAS	Polyline	Utilities, wildlife, transp., storm drainage/detention, etc.
27	EASBLD	Polyline	Building setback
28	BUFF	Polyline	Buffers (riparian, vegetation, etc.)
29			
30	FP	Polyline	Flood plain
31	FW	Polyline	Flood way
32	WETLAND	Polyline	Wetlands
33			
34			
35	SDLINK	Polyline	Storm drain culvert, ditch, pipe, etc.
36	SDNODE	Point	Storm drain structure (manhole, junction box,
37	SDTEXT	Text	Annotation describing storm drainage (SD)
38			

39	SSLINK	Polyline	Sanitary sewer pipe
40	SSNODE	Point	Sanitary sewer manholes, pumps, junctions, etc.
41	SSTEXT	Text	Annotation describing sanitary sewer (SS)
42			
43	WTRLINK	Polyline	Water pipe
44	WTRNODE	Point	Water access/junction box, valves, etc.
45	FIREHYD	Point	Fire hydrant
46	WTRTEXT	Text	Annotation describing water service (WTR)
47	CTOUR1	Polyline	Un-broken contour lines (* design/as-built)
48			
49			
50			
51	LOTNUM1	Text	Proposed parcel lot number
52	LOTDIM1	Text	Bearings, distances, acreage, and x/y of POB
53	SUBNAM1	Text	Subdivision name
54	RDNAME1	Text	Street/road name
55	RDNAME2	Text	Road number (Federal, State, County highways,
56	PAVTYPE1	Text	* Pavement type
57	RAILNAM1	Text	Railroad name
58	HYDNAM1	Text	Hydrographic feature name
59	EASTYPE	Text	Type of easement (utility, transp., wildlife, storm, etc.)
60	CTOURVAL	Text	Elevation of individual contours

* Level 56 - Pavement type (PAVTYPE1) shall include the following standard surface designations:

- Asphalt Concrete
- Bituminous Surfacing
- Concrete
- Gravel
- Dirt

28.3 APPENDIX B

Metadata Text File (‘metadat.txt’) Specifications

Subdivision Name: Submittal Date:
County:
City:

Parent Parcel #:
Number of Lots:

Type of Geodetic Control:

Monument Reference: Y / N

Traverse to Monument
Referenced Monument Name/Number:
Distance to Monument:

<u>GPS</u>
Unit Type:
PDOP of Control Points:
Differentially Corrected: Y / N
Elevation Reference: Y / N

Prepared by/Firm Name:

Engineer of Record:

Drawing/File Name:

Software/Version Used:

PART 29: FATS, OILS, AND GREASE MANAGEMENT REGULATION
TABLE OF CONTENTS

Paragraph	Description	Page No.
29.1	Purpose	29-1
29.2	Definitions	29-1
29.3	Grease Traps and Grease Interceptors	29-2
29.4	FOG Registration and New Grease Trap/ Grease Interceptor Inspection Procedure	29-7
29.5	Inspection Procedure	29-9
29.6	Violations	29-10

CITY OF COLUMBIA REGULATIONS
PART 29
FATS, OILS, AND GREASE MANAGEMENT REGULATION

29.1 **PURPOSE:**

This regulation will be enforced in conjunction with the City of Columbia, South Carolina, Code of Ordinances, Chapter 23 (Chapter 23), and establishes uniform registration, operating, maintenance, cleaning, and inspection requirements designed to limit and control the discharge of fats, oils, and grease from Food Service Establishments (FSEs) into the City's wastewater collection system. The objectives of this regulation include the following:

29.1.1 To reduce the introduction of excessive amounts of fats, oils, and grease into City of Columbia (City) wastewater collection system;

29.1.2 To reduce fats, oils, and grease related build-up to the City's wastewater collection system that could lead to clogging or blocking of the sewer lines, causing backup and flooding of streets, residences, and commercial buildings, resulting in potential liability to the City;

29.1.3 To establish uniform identification numbers along with registration procedures and Global Positioning System Coordinates to be input into GIS to identify food service establishments located within the City wastewater service area;

29.1.4 To establish operation, cleaning, and maintenance requirements for food service establishments with grease traps and/or grease interceptors;

29.1.5 To establish inspection procedures and requirements for food service establishments with grease traps and/or grease interceptors;

29.1.6 To establish review procedures and reporting requirements for food service establishments installing new grease traps and/or grease interceptors; and

29.1.7 To establish enforcement procedures for violations of Chapter 23 and any provision of this regulation.

29.2 **DEFINITIONS**

29.2.1 *Director* means the City's Director of Utilities and Engineering.

29.2.2 *Fats, Oils, and Grease (FOG)* means any material, either liquid or solid, composed primarily of fats, oils, and grease from animal or vegetable sources.

29.2.3 *Food Service Establishment (FSE)* means any commercial facility, including, by way of example and without limitation, restaurants, motels, hotels, cafeterias, hospitals, schools, bars, and any other facility which, in the sole discretion of the City, must install a Grease Trap or Grease Interceptor prior to discharging kitchen or food preparation wastewater into the City's wastewater collection system. This definition includes, but is not limited to, any establishment which is required to

have a South Carolina Department of Health and Environmental Control (SCDHEC) food service license and/or permit.

29.2.4 *FSE Owner* or *Owner* means, in the case of an individually owned FSE, the Owner(s) and/or proprietor(s) of the FSE. Where the FSE is a franchise operation, the Owner of the franchise is the responsible person and/or entity and is considered the FSE Owner. Where the FSE is owned by a corporation, the corporate representative, as designated on the FOG Registration form, is deemed to be authorized to act on behalf of the corporation. Where two or more FSEs share a common Grease Interceptor, the FSE Owner is any individual and/or entity who owns and/or assumes, maintains, or exercises control of the Grease Interceptor or the property on which the Grease Interceptor is located, as well as any individual and/or entity who utilizes or will utilize the shared Grease Interceptor.

29.2.5 *Gray Water* means all of the liquid contained in a Grease Trap or Grease Interceptor that lies below the floating grease layer and above the bottom solids layer.

29.2.6 *Grease* means a material, either liquid or solid, composed primarily of fats, oils, and grease from animal or vegetable sources. The terms “FOG," "oil and grease," and "oil and grease substances" shall all be included within this definition and these terms may be used interchangeably.

29.2.7 *Grease Hauler* means a person or entity that collects the contents of Grease Traps and/or Grease Interceptors and transports the contents to an approved recycling or disposal facility. A Grease Hauler may also provide other services to FSEs related to Grease Trap and/or Grease Interceptor cleaning and maintenance.

29.2.8 *Grease Interceptor* means a large underground concrete vault located outside of an FSE designed to collect, contain, or remove Grease from the waste stream while allowing the sub-straight or Gray Water to discharge to the wastewater collection system by gravity.

29.2.9 *Grease Trap* means a device located within an FSE designed to collect, contain, separate, or remove Grease from the waste stream while allowing the sub-straight waste or Gray Water to discharge to the wastewater collection system by gravity.

29.2.10 *Inspector* or *City Staff* means an employee of the City, who under the authority of the Director, has responsibility for implementing and who does implement any FOG management regulations.

29.2.11 *Program* means the contents of this regulation, Part 29, as implemented by the Director, Inspectors, and City Staff.

29.3 GREASE TRAPS AND GREASE INTERCEPTORS

29.3.1 ***Requirements:*** All FSEs located within the City of Columbia wastewater service area are required to have a Grease Trap and/or Grease Interceptor properly installed and maintained in accordance with the following: this regulation - *Fats, Oils, and Grease Management – Part 29*; *Specifications for Grease Traps and*

Grease Interceptors Regulation - Part 30; and all applicable requirements of the City's most recently adopted version of the International Plumbing Code.

29.3.2 ***New FSEs:*** FSEs which are proposed or newly constructed, and existing FSEs undergoing a change of use which necessitates the issuance of a new SCDHEC food service permit, expansion, or renovation to provide food services, are considered New FSEs. All New FSEs are required to install Grease Traps and/or Grease Interceptors, as appropriate, in compliance with the *City of Columbia Grease Trap and Interceptor Sizing Guide* (located at *Specifications for Grease Traps and Interceptors Regulation - Part 30*, Attachment C). New FSEs are required to operate, maintain, clean, and repair their Grease Traps and Grease Interceptors according to and in compliance with all applicable provisions contained in this regulation. In situations where it is not feasible for a New FSE to install an underground Grease Interceptor, the New FSE is required to install adequate and approved Grease Traps for use on individual fixtures, including, but not limited to: pot sinks, mop sinks, pre-rinse sinks, wok ovens, floor drains, and any other drains where the potential for introduction of Grease exists. In such cases, Grease Traps will be considered adequate and will be approved by the City only if a flow control device is placed on the inlet that prevent overloading and a sample port is placed on the outlet of each Grease Trap.

29.3.3 ***Existing FSEs:*** Except as provided in Subsection 3.3.1 below, Existing FSEs, which are those FSEs already operating with Grease Traps and/or Grease Interceptors that were installed prior to the effective date of this regulation, will generally be permitted to operate and maintain existing Grease Traps and Grease Interceptors provided they are in proper operating condition and are maintained, cleaned, and repaired in accordance with all applicable provisions contained in this regulation and/or Chapter 23. In the event of noncompliance with this regulation or Chapter 23, the City may, in its sole discretion: (1) allow modifications to be made by the FSE, at the FSE's own expense, to the existing Grease Trap or Grease Interceptor in order to bring it into compliance; or (2) require that the existing FSE install, at its own expense, a new Grease Trap and/or Grease Interceptor that meets the requirements of this and all other applicable laws and regulations including, without limitation, *Specifications for Grease Traps and Interceptors Regulation - Part 30* and Chapter 23.

29.3.3.1 *Grease Traps and Grease Interceptors installed prior to the effective date of this regulation*. If a Grease Trap or Grease Interceptor installed prior to the effective date of this regulation does not allow for measurement and sampling to demonstrate that the Grease Trap or Grease Interceptor is in compliance with this regulation and Chapter 23, the FSE must modify or replace the Grease Trap or Grease Interceptor as provided below no later than December 31, 2018:

(a) The City, in its sole discretion, may approve a proposed modification of an existing Grease Trap or Grease Interceptor which allows for measurement and sampling of the existing Grease Trap or Grease Interceptor to demonstrate that the Grease Trap or Grease Interceptor is in compliance with this regulation and Chapter 23. Any proposed modification to meet this requirement must be submitted to the City for review no later than June 30, 2018; or

(b) If not modified pursuant to (a) above, the existing Grease Trap or Grease Interceptor must be replaced with a new Grease Trap or Grease Interceptor, as appropriate, in compliance with the *City of Columbia Grease Trap and Interceptor Sizing Guide* (located at *Specifications for Grease Traps and Interceptors Regulation* - Part 30, Attachment C).

29.3.4 ***Plumbing Connections:*** Grease Traps and Grease Interceptors shall be installed in accordance with the requirements contained in all applicable local plumbing codes. Any Grease Trap and/or Grease Interceptor shall be located in the FSE's lateral sewer line between all fixtures which may introduce Grease into the City's wastewater collection system. Wastewater from domestic facilities and other similar fixtures shall not be introduced into a Grease Trap and/or Grease Interceptor by the FSE under any circumstances.

29.3.5 ***Grease Traps***. All Grease Traps shall be installed in accordance with the City's most recently adopted version of the International Plumbing Code. Each FSE shall operate and maintain its Grease Trap in accordance with the following criteria:

29.3.5.1 *Sizing*. All Grease Traps shall be sized in accordance with the City of Columbia Grease Trap and Interceptor Sizing Guide (located at *Specifications for Grease Traps and Grease Interceptors Regulation - Part 30*, Attachment C).

29.3.5.2 *Flow control device and sample port*. FSEs are responsible for equipping Grease Traps with a device on the inlet side to control the rate of flow through the Grease Trap. The rate of flow shall not exceed the manufacturer's rated capacity in gallons per minute for each Grease Trap. FSEs are also responsible for equipping Grease Traps with a sample port on the outlet side.

29.3.5.3 *Installation, inspection, cleaning, and maintenance.* Each FSE shall be solely responsible for the cost of Grease Trap installation, inspection, cleaning, and maintenance. Each FSE must either contract with a Grease Hauler cleaning service or develop a written protocol for and perform its own Grease Trap cleaning and maintenance procedures that meet the requirements of this Program. Cleaning shall include the complete removal of all floating materials, Gray Water, and bottom solids from the Grease Trap. The return of Gray Water back into the Grease Trap or into the City's the wastewater collection system is prohibited. Grease Trap cleaning must include removing/scraping excess solids from walls, floors, baffles, and inlet and outlet piping. It is the responsibility of each FSE to inspect its Grease Trap during and after the pumping and cleaning procedure to ensure that the Grease Trap is properly cleaned out and that the structure is sound and all fittings and fixtures inside the Grease Trap are in working condition and are functioning properly. The FSE Owner must have documentation consisting of inspection, cleaning, and maintenance logs on site in accordance with and demonstrating compliance with this regulation and must be able to produce the documentation immediately upon request of the Inspector and/or City Staff.

29.3.5.4 *Grease Trap Cleaning Frequency.* Cleaning and maintenance should generally be performed in accordance with the Grease Trap manufacturer's recommendations. However, despite this provision, cleaning and maintenance must be performed as

often as and in the manner necessary to achieve full compliance with Chapter 23 and this regulation, even if such cleaning and maintenance exceeds that recommended by the manufacturer.

29.3.5.5 *Inspection.* Grease Traps shall be inspected by the Inspector as often as necessary in the City's sole discretion to ensure compliance with Chapter 23, and this regulation, and to determine if proper cleaning and maintenance schedules as set forth herein are being adhered to by the FSE. FSEs with Grease Traps are responsible for having qualified staff on hand during any inspection to open and close the Grease Trap.

29.3.5.6 *Repairs and replacement.* Each FSE shall be solely responsible for the cost, scheduling, and performance of all repairs and replacements to its Grease Trap(s), including, without limitation, any and all repairs and replacements that may be required by the Inspector and/or City Staff under this Program.

29.3.6 ***Grease Interceptors:*** Grease Interceptors shall be designed and installed in accordance with *Specifications for Grease Traps and Interceptors – Part 30* and the City's most recently adopted version of the International Plumbing Code. In the event of a conflict between the two, the most stringent requirements shall apply. Each FSE shall operate and maintain its Grease Interceptor in accordance with the following criteria:

29.3.6.1 *Installation, inspection, cleaning, and maintenance.* Each FSE shall be solely responsible for the costs of installing, inspecting, pumping, cleaning, and maintaining its Grease Interceptor(s). All FSEs that have Grease Interceptors shall utilize a Grease Hauler to properly dispose of Grease Interceptor contents. Cleaning shall include the complete removal of all Grease Interceptor contents including floating materials, Gray Water, and bottom solids. The return of Gray Water back into the Grease Interceptor or into the City's wastewater collection system is prohibited. Grease Interceptor cleaning must be performed as often as and in a manner necessary to achieve compliance with Chapter 23 and this regulation. Such cleaning may include removing/scraping and/or hydroscrubbing excessive solids from the walls, floors, baffles and all interior plumbing. It shall be the responsibility of each FSE to inspect its Grease Interceptor during the pumping and cleaning procedure to ensure that the Grease Interceptor is properly cleaned out and that the structure is sound and all fittings and fixtures inside the Grease Interceptor are in working condition and functioning properly. The FSE Owner must have documentation consisting of inspection, cleaning, and maintenance logs on site in accordance with and demonstrating compliance with this regulation and must be able to produce the documentation immediately upon request of the Inspector and/or City Staff.

29.3.6.2 *Grease Interceptor cleaning frequency.* Each FSE shall have its Grease Interceptor(s) cleaned at a minimum frequency of twice per year. In addition to this required cleaning, each FSE shall determine an additional frequency at which its Grease Interceptor(s) shall be cleaned in accordance and in compliance with each of the following criteria:

29.3.6.2.1 When the floatable Grease layer exceeds six inches in depth as measured with an approved dipping method;

29.3.6.2.2 When the settleable solids layer exceeds eight inches in depth as measured with an approved dipping method;

29.3.6.2.3 When the total volume of captured Grease and solid material displaces more than 25 percent of the capacity of the Grease Interceptor as calculated with an approved dipping method; or

29.3.6.2.4 When the Grease Interceptor is not retaining/capturing FOG so as to comply with the requirements of Chapter 23 and this regulation.

29.3.6.3 *Inspection.* Grease Interceptors may be inspected by the Inspector as often as necessary in the City's sole discretion to ensure compliance with this Program, including, without limitation, to determine if proper cleaning and maintenance schedules are being adhered to by the FSE. FSEs with Grease Interceptors that are inaccessible to the Inspector are responsible for having staff readily available during any inspection to provide access to and to open and close the Grease Interceptor for the Inspector. It is the sole responsibility of the FSE to provide the City with access to any inaccessible Grease Interceptor.

29.3.6.4 *Repairs and replacement.* Each FSE shall be responsible for the cost, scheduling, and performance of all repairs and replacements to its Grease Interceptor(s), including, without limitation, any and all repairs and replacements that may be required by the Inspector and/or City Staff under the Program.

29.3.7 ***Additives.*** The introduction of chemicals, enzymes, emulsifiers, live bacteria or other grease cutters or additives into the wastewater collection system is generally prohibited by the City. On very rare occasions the City may, in its sole discretion, approve an FSE's use of additives. FSEs seeking to introduce additives must, prior to their introduction into Grease Traps or Grease Interceptors, submit the following information to the Department of Utilities and Engineering Wastewater Compliance Section for review and consideration: Material Safety Data Sheets and any other applicable information concerning the composition, frequency of use, and mode of action of the proposed additive(s) and a written statement outlining the FSE's proposed use of the additive(s). The FSE may only use the additives if and when the City grants the FSE permission to do so in writing and then may only do so in accordance with the specific parameters set forth by the City therein. Permission to use any specific additive may be withdrawn by the City at any time, upon the City's providing written notice to the FSE.

29.3.8 ***Alternative Grease Removal Devices or Technologies.*** The use of alternative Grease removal devices and technologies, such as automatic grease removal systems, are generally prohibited by the City. On rare occasions, the City may, in its sole discretion, approve the use of this technology and these devices on a case-by-case basis. An FSE may only use alternative Grease removal devices or technologies after receiving permission to do so in writing from the City and then may only do so in accordance with the specific parameters set forth by the City therein. Permission to use any alternative Grease removal devices or technologies

may be withdrawn by the City at any time, upon the City's providing written notice to the FSE.

29.3.9 ***Recordkeeping.*** Each FSE shall maintain records required hereunder in a bound logbook kept on site at the FSE describing and documenting all cleaning, maintenance, and repairs performed for each Grease Trap and Grease Interceptor including the date and time of each pump out or cleaning and details regarding same; records documenting and detailing any maintenance and/or repairs, and the dates on which such maintenance and/or repairs were performed and completed; and any other records documenting and related to the cleaning, maintenance, and/or repairs for each Grease Trap or Grease Interceptor. The logbook must be made available by the FSE for review by the Inspector and/or City Staff upon request during an inspection. In addition to the records specified above, each FSE shall also maintain a file on-site which contains the following information:

29.3.9.1 A copy of the FSE's FOG Registration form submitted to the City pursuant to Section 4.0 below; and

29.3.9.2 Receipts evidencing and identifying (at least by name, address, and service(s) provided) any individuals and/or entities performing cleaning, maintenance, and/or repairs on each Grease Trap and/or Grease Interceptor including, without limitation, Grease pumpers, Grease Haulers, plumbers, and parts suppliers.

Failure to maintain complete records in accordance with the Program as specified herein or to provide such records to the Inspector and/or City Staff upon request constitutes a violation of this regulation. All records required of an FSE under this regulation must be maintained for the time period consisting of the two (2) years immediately preceding the date of the most recent inspection of the FSE by the City, and for any time period thereafter.

29.3.10 ***Disposal.*** It is the responsibility of each FSE Owner to ensure that wastes removed from each of its Grease Traps and/or Grease Interceptors are properly disposed of at a facility permitted to receive such wastes.

29.4 **FOG REGISTRATION AND NEW GREASE TRAP/GREASE INTERCEPTOR INSPECTION PROCEDURE**

29.4.1 ***Registration Requirements for FSEs.*** Each FSE shall be subject to the FOG Registration requirements in this Section 4.0. This FOG Registrationis required in addition to any other permits, registrations, or business license(s) which may be required of the FSE by federal, state, or local law or regulation.

29.4.2 ***Registration Form*.** The City shall provide or make available a FOG Registration form for all FSEs located within the City's wastewater service area. All Existing FSEs are required to submit a completed FOG Registration to the City at the address shown on the form no later than thirty (30) calendar days after receiving notification by the City that registration is required. Failure to do so will constitute a violation of this regulation. New FSEs are required to submit a completed FOG Registrationn to the City at the address shown on the form prior to beginning construction as described in Section 4.5 below. Each FOG Registration form submitted shall include the following information:

29.4.2.1 FSE Owner's name, title, and contact information; FSE contact name, title, and contact information, if different from the FSE Owner; FSE water and sewer account holder contact information; name of FSE; physical address of FSE; telephone number of FSE; and business mailing address of FSE if different from physical address;

29.4.2.2 A description of the type of food service activities to be performed at the FSE;

29.4.2.3 Seating capacity of the FSE;

29.4.2.4 A copy of calculations demonstrating how the size of each Grease Trap and/or Grease Interceptor was determined; a set of plumbing drawings or sketches, including floor plans and riser diagrams; and a site plan showing the location of the sewer discharge(s) and the location of any exterior Grease Interceptors, where applicable (drawings or sketches must have sufficient enough detail to show the location of all kitchen equipment and plumbing fixtures with drains, floor drains, sewer connections, and all Grease Traps and Grease Interceptors);

29.4.2.5 For FSEs with Grease Traps, documentation demonstrating that
(a) the Grease Trap is equipped with a device on the inlet side to control the rate of flow through the Grease Trap such that the rate of flow does not exceed the manufacturer's rated capacity in gallons per minute for each Grease Trap; and
(b) the Grease Trap is equipped with a sample port on the outlet side;

29.4.2.6 Total hours of operation each day;

29.4.2.7 Executed statement of the FSE Owner certifying that the FSE Owner has received, read, understands, and agrees to abide by *Fats, Oils, and Grease Management – Part 29*; *Specifications for Grease Traps and Grease Interceptors Regulation - Part 30*; Chapter 23, as well as any other applicable federal, state, and local laws and regulations governing the FSE; that the information provided in the FOG Registration form is accurate; that the FOG Registration form was completed at the FSE Owner's direction and with the FSE Owner's approval; that the FSE Owner understands that providing false information or violating the provisions of the above-stated laws and/or regulations may result in termination of the FSE's water and/or sewer service, and/or revocation of the FSE's permitted water and/or sewer capacity; and that if the FSE's water and/or sewer service is terminated, the FSE will have to submit a new FOG Registration form and/or reapply for water and/or sewer service with the City and bear all associated costs; and

29.4.2.8 All other information regarding the description of the FSE's operations, including, without limitation, information regarding the FSE's Grease Traps and Grease Interceptors, and treatment of same, as identified on the FOG Registration form.

29.4.3 ***FSEs with Shared Grease Interceptor(s).*** In situations where FSEs share one or more Grease Interceptors, the owner of each Grease Interceptor and any FSE and FSE Owner who utilizes or will utilize the shared Grease Interceptor are collectively responsible for completion and submission of the FOG Registration form to the City within the time period required in this regulation, for identifying all FSEs connected to each Grease Interceptor in the FOG Registration form, and

for ensuring that all FSEs connected to that Grease Interceptor comply with this regulation, as well as Chapter 23. All FSEs connected to the shared Grease Interceptor shall be subject to inspections under this regulation. In the event the identity of an FSE connected to the shared Grease Interceptor changes or in the event that an additional FSE connects to the shared Grease Interceptor, the owner of the shared Grease Interceptor, the FSE Owner, and any FSE utilizing or who will utilize the shared Grease Interceptor must submit an updated FOG Registration form identifying the change or the additional FSE to the City at least thirty (30) calendar days prior to the change and prior to the additional FSE connecting to the shared Grease Interceptor.

29.4.4 ***New Grease Trap/Grease Interceptor Inspection Procedure.***

29.4.4.1 *FSE – New Facilities.* After a completed and satisfactory FOG Registration form has been submitted to the City, the FSE may proceed with installation and/or construction of the Grease Trap and/or Grease Interceptor. When installation and/or construction of the Grease Trap and/or Grease Interceptor is completed, the FSE Owner shall notify the City that the FSE is ready for inspection. The FSE Owner shall notify the City prior to covering any exterior Grease Interceptors. During the inspection, the information contained in the FOG Registration form will be verified and the FSE's Grease Traps and/or Grease Interceptors will be inspected. If any Grease Trap or Grease Interceptor requires maintenance or repairs, if any incorrect information has been given, or in the event of noncompliance with any portion of this regulation, the Inspector will issue a written notice requiring that the FSE correct any deficiencies, including a required time schedule for repairs to be effected prior to a second inspection. Second inspections will be performed after a minimum of ten (10) calendar days have elapsed to allow the FSE to implement appropriate and necessary corrective action(s) to correct the deficiencies. If the FSE is not in compliance at the second inspection, the FSE Owner must complete any additional maintenance and/or repairs or take whatever other action may be required for compliance, and resubmit the FOG Registration form. Failure to comply with any portion of this regulation after resubmission of the FOG Registration form may result in enforcement action pursuant to Chapter 23, including, but not limited to, termination or denial of the FSE's water and/or sewer service.

29.4.4.2 *FSE – Existing Facilities.* All Existing FSEs are required to submit a completed FOG Registration form to the City at the address shown on the form no later than thirty (30) calendar days after receiving notification by the City that registration is required. Failure to do so will constitute a violation of this regulation. A new FOG Registration form must be submitted upon change in ownership of the FSE or changes in operations or plumbing changes or additions, including, without limitation, a change of use which necessitates the issuance of a new SCDHEC food service permit; remodeling or expansion of the food preparation area; and/or modifications to the kitchen waste plumbing system. No new Grease Trap or Grease Interceptor may be placed into service until the City has conducted an inspection pursuant to the procedures set forth in Section 4.5.1 above.

29.5 **Inspection Procedure.** All FSEs are subject to inspection as follows:

29.5.1 *Inspections.* The Inspector and City Staff may inspect FSEs at any time during business hours in order to verify continued compliance with all applicable laws and regulations, including, without limitation, requirements of this regulation and Chapter 23. All FSEs which have submitted a FOG Registration will be inspected on a regular basis. Inspections shall include, without limitation, all equipment, food processing and storage areas that discharge into the Grease Traps and/or Grease Interceptors at the FSE. The Inspector and/or City Staff shall also inspect the FSE's logbook and other records and data required to be kept hereunder; Grease Trap(s) and/or Grease Interceptor(s); and may check the level of the Grease Trap and/or Grease Interceptor contents and take samples and/or photographs as deemed necessary in the Inspector's sole discretion. If noncompliance is identified by the Inspector and/or City Staff during an inspection, the Inspector will, after the inspection, issue the FSE a written notice of violation directing the FSE to correct any deficiency. The FSE will be scheduled for re-inspection at the time denoted in the notice of violation.

29.5.2 *Re-inspections*. The Inspector and City Staff will re-inspect FSEs that are issued a notice of violation within the time period specified in the notice of violation. The Inspector shall inspect, without limitation, any repairs made or other corrective measures taken by the FSE with regard to any noted violations and will subsequently provide written notice of compliance or non-compliance to the FSE as the case may be. If, upon re-inspection, the FSE has corrected all of the deficiencies which resulted in the issuance of the notice of violation and the FSE is in full compliance with all other requirements of the Program, the FSE will be notified by the City that it is in compliance.

29.5.3 *Access and Cooperation During Inspection*s. Upon the request of the Inspector and other duly authorized employees or agents of the City, each FSE shall allow the Inspector and other duly authorized employees or agents of the City, including, without limitation, City Staff, access to all parts of the FSE premises for inspection, observation, records examination, measurement, sampling, testing and for other purposes in accordance with the provisions of this regulation. The refusal of any FSE to allow the Inspector and/or City Staff entry to or upon the FSE's premises, or an FSE's failure to cooperate in any manner during the course of an inspection, shall constitute an immediate violation of this regulation, which may result in enforcement action pursuant to Section 6.4 of this regulation.

29.5.4 *Non-Compliance:* In the event of continuing non-compliance after re-inspection, the FSE Owner will be notified that continued failure to comply within the time period designated by the City may result in enforcement action pursuant to Chapter 23, including, but not limited to, termination of water and/or sewer service.

29.6 **VIOLATIONS**

29.6.1 *Notices of Violation.* Deficiencies that will result in a finding of noncompliance and issuance of a notice of violation under this Program include the following:

29.6.1.1 Failure of the FSE to allow the Inspector or City Staff access to all parts of the FSE premises for inspection, observation, records examination, measurement,

sampling, testing and for other purposes in accordance with the provisions of this regulation shall constitute an immediate violation;

29.6.1.2 Failure of the FSE to properly operate, maintain, clean, and/or repair a Grease Interceptor and/or Grease Trap in accordance with this regulation;

29.6.1.3 Failure of the FSE to report changes in operations or plumbing changes or additions, including, without limitation, a change of use which necessitates the issuance of a new SCDHEC food service permit; remodeling or expansion of the food preparation area; and/or modifications to the kitchen waste plumbing system;

29.6.1.4 Where the FSE is operating an irreparable or defective Grease Trap and/or Grease Interceptor that is in need of replacement;

29.6.1.5 Failure to report a sale or change in ownership of the FSE by submitting a new FOG Registration form within the thirty (30) days and in accordance with the procedures set forth in this regulation;

29.6.1.6 Failure of the FSE to have or maintain plumbing connections to a Grease Trap or Grease Interceptor in compliance with the requirements of this regulation;

29.6.1.7 Failure of the FSE to submit a completed FOG Registration within thirty (30) days after the date of notification by the City that such an application is required to be submitted;

29.6.1.8 Where the FSE is contributing FOG to the City's wastewater collection system in quantities in excess of the allowable limits as established in Chapter 23;

29.6.1.9 Failure of the FSE to maintain and/or retain, or to produce upon the Inspector or City Staff's request, records as required under this regulation for the time period delineated in this Program;

29.6.1.10 Where the FSE has no Grease management in place;

29.6.1.11 Where the FSE Owner and/or any user of a shared Grease Interceptor has failed to identify to the City all FSEs connected to the shared Grease Interceptor in the FOG Registration form in accordance with the requirements of this regulation;

29.6.1.12 Where the FSE previously received a notice of violation under this Program and, upon re-inspection, the FSE remained in noncompliance;

29.6.1.13 Where the FSE, in the sole discretion of the City, has engaged in bad-faith failure or has refused to comply with a notice of violation issued under this Program or has failed to otherwise cooperate with the Inspector and/or City Staff as required by this regulation; and

29.6.1.14 Any other noncompliance with the Program, this regulation, or Chapter 23.

29.6.2 *Schedules of Compliance.* Failure to comply with this regulation may result in the following notices of violation with the compliance schedules noted. However,

nothing in this Section 6.2 precludes the City from taking immediate enforcement against an FSE in violation of this regulation or Chapter 23:

29.6.2.1 A notice of violation may be issued to the FSE by the City with the following compliance schedule in situations where an Inspector determines:

(a) that the FSE's Grease Trap and/or Grease Interceptor is irreparable or defective and must be replaced.

(b) that an FSE has no Grease management in place;

(c) that the FSE has undergone a change of use which necessitates the issuance of a new SCDHEC food service license and/or permit, remodeling, expansion of the food preparation area, or modifications to the kitchen waste plumbing system and has failed to comply with the requirements of Section 3.2 of this regulation;

(d) that the FSE does not have or does not properly maintain plumbing connections to a Grease Trap or Grease Interceptor in compliance with this regulation.

FSEs receiving a notice of violation for any deficiency identified above will be required, within fifteen (15) days of the date of the notice of violation, to submit a corrective action plan to the City for consideration, outlining and detailing the scope of work, including a timeline for completion, that meets the requirements set forth in this Program, *Specifications for Grease Traps and Grease Interceptors Regulation - Part 30*, and Chapter 23. If the City approves the corrective action plan, the FSE must construct the improvements at its own expense. Construction must be complete within forty-five (45) days of the date of the City's written approval of the corrective action plan. A pre-construction inspection will be scheduled by the City and the FSE is responsible for notifying the City at least twenty-four (24) hours in advance of the start of construction in order that this inspection can be scheduled.

29.6.2.2 A notice of violation may be issued to the FSE by the City with a fifteen (15) day compliance schedule in situations where an Inspector determines:

(a) that the FSE has failed to adequately clean, maintain, repair, or replace a Grease Trap or Grease Interceptor as determined by the City in accordance with this Program;

(b) that the FSE is contributing FOG to the City's wastewater collection system in quantities in excess of the allowable limits as established by the City in Chapter 23;

(c) that the FSE has been sold or undergoes a change of ownership or in operations and a new FOG Registration form is not submitted by the New FSE Owner in accordance with the requirements of this regulation;

(d) that the FSE has been notified by the City that it must submit a completed FOG Registration form and the FSE has failed to do so within thirty (30) days of the date of notification;

(e) that the FSE Owner and/or any user of a shared Grease Interceptor has failed to identify to the City all FSEs connected to the shared Grease Interceptor in the FOG Registration form in accordance with the requirements of this regulation;

(f) that the FSE has failed to produce, maintain, or retain maintenance logs, files, or other records required to be kept under this regulation for the time

period consisting of the two (2) years immediately preceding the date of the most recent inspection at the FSE and any time period thereafter; or

(g) that the FSE has otherwise failed to comply with the Program in any other manner set forth in this regulation.

29.6.2.3 A notice of violation will be issued to the FSE by the City with a seven (7) day compliance schedule in situations where an Inspector determines:

(a) that the FSE previously received a notice of violation under this Program and, upon re-inspection, the FSE remained in noncompliance; or

(b) that the FSE is, in the sole discretion of the City, has engaged in bad-faith failure or has refused to comply with a notice of violation issued under this Program or has failed to otherwise cooperate with the Inspector and/or City Staff as required by this regulation.

29.6.3 *Corrective Action.* Where a FSE receives three (3) notices of violation within a one-year time period under this Program, the FSE will be automatically placed on a corrective action plan by the City that is designed to bring the Grease Trap and/or Grease Interceptor into compliance within the period of time specified in the corrective action plan. An FSE may be placed on a corrective action plan for a single violation or combination of violations when, in the discretion of the City, such violation(s) are of a nature or severity which warrants the imposition of a corrective action plan to bring the FSE into compliance with this regulation.

29.6.4 *Other Enforcement Action*. Any FSE which violates Chapter 23 or this regulation shall be subject to such other enforcement action as allowed by and in accordance with Chapter 23 and applicable state law, including, but not limited to:

(a) A civil penalty not to exceed two thousand dollars for each day of violation;

(b) Termination of water or wastewater service pursuant to Section 23-111 of Chapter 23; and

(c) Criminal penalties pursuant to Section 23-112 of Chapter 23.

PART 30: SPECIFICATIONS FOR GREASE TRAPS AND GREASE INTERCEPTORS
TABLE OF CONTENTS

Paragraph	Description	Page No.
30.1	General	30-1
30.2	Definitions	30-1
30.3	Design and Construction Requirements	30-2
30.4	Inspection for Acceptance	30-5
30.5	Attachment A: Standard Grease Interceptor	30-6
30.6	Attachment B: Standard Grease Interceptor in Series	30-7
30.7	Attachment C: Grease Trap and Grease Interceptor Sizing Guide	30-8
30.8	Attachment D: Grease Trap Specification Sheet Example	30-9

CITY OF COLUMBIA REGULATIONS
PART 30
SPECIFICATIONS FOR GREASE TRAPS AND GREASE INTERCEPTORS

30.1 GENERAL

30.1.1 This section includes guidelines and requirements for design and installing Grease Traps and Grease Interceptors. Construction details GR #1 and GR #2 attached hereto as Attachment A and Attachment B, respectively, are part of these specifications.

30.1.2 Grease Traps or Grease Interceptors shall be provided by each Food Service Establishment (FSE) for the proper handling of liquid wastes containing significant amounts of fats, oils, and grease as specified in the *Fats, Oils, and Grease Management Regulation* - Part 29 (Part 29). All Grease Traps and Grease Interceptors installed by FSEs must be in compliance with Part 29 and the specifications herein and shall be located so as to be readily and easily accessible for cleaning and inspection. All Grease Traps and Grease Interceptors shall be supplied by and properly cleaned and maintained by the FSE Owner at its own expense in accordance with and as provided in Part 29.

30.1.3 All FSEs, new or existing, requesting sewer service from the City of Columbia (the City), shall submit a FOG Registration form in accordance with Part 29 prior to receiving sewer service.

30.1.4 It is the intent of this specification to provide specific standards for the location, design, installation and construction of Grease Traps and Grease Interceptors in accordance with the requirements stated herein. Failure to comply with this specification shall result in the denial or discontinuance of water and/or sewer service.

30.2 DEFINITIONS

30.2.1 *Fats, Oils, and Grease (FOG)* means any material, either liquid or solid, composed primarily of fats, oils, and grease from animal or vegetable sources.

30.2.2 *Food Service Establishment (FSE)* means any commercial facility, including, by way of example and without limitation, restaurants, motels, hotels, cafeterias, hospitals, schools, bars, and any other facility which, in the sole discretion of the City, must install a Grease Trap or Grease Interceptor prior to discharging kitchen or food preparation wastewater into the City's wastewater collection system. This definition includes, but is not limited to, any establishment which is required to have a South Carolina Department of Health and Environmental Control (SCDHEC) food service license and/or permit.

30.2.3 *FSE Owner or Owner* means, in the case of an individually owned FSE, the Owner(s) and/or proprietor(s) of the FSE. Where the FSE is a franchise operation, the Owner of the franchise is the responsible person and/or entity and is considered the FSE Owner. Where the FSE is owned by a corporation, the corporate representative, as designated on the FOG Registration form, is deemed to be authorized to act on behalf of the corporation. Where two or more FSEs

share a common Grease Interceptor, the FSE Owner is any individual and/or entity who owns and/or assumes, maintains, or exercises control of the Grease Interceptor or the property on which the Grease Interceptor is located, as well as any individual and/or entity who utilizes or will utilize the shared Grease Interceptor.

30.2.4 *Gray Water* means all of the liquid contained in a Grease Trap or Grease Interceptor that lies below the floating grease layer and above the bottom solids layer.

30.2.5 *Grease* means a material, either liquid or solid, composed primarily of fats, oils, and grease from animal or vegetable sources. The terms "FOG", "oil and grease," and "oil and grease substances" shall all be included within this definition and may be used interchangeably.

30.2.6 *Grease Interceptor* means a large underground concrete vault located outside of an FSE designed to collect, contain, or remove FOG from the waste stream while allowing the sub-straight or Gray Water to discharge to the wastewater collection system by gravity.

30.2.7 *Grease Trap* means device located within an FSE that is designed to collect, contain, separate, or remove FOG from the waste stream while allowing the sub-straight waste or Gray Water to discharge to the wastewater collection system by gravity.

30.3 DESIGN AND CONSTRUCTION REQUIREMENTS

30.3.1 NEW FSEs

30.3.1.1 Non-cooking intensive FSEs, as determined by the City, may be allowed to utilize Grease Traps. Examples of FSEs which might be determined to be non-cooking intensive FSEs are identified in *City of Columbia Grease Trap and Grease Interceptor Tank Sizing Guide (attached hereto as Attachment C)*; however, these FSEs are provided by way of example only. The City will make a determination on the applicable sizing guide formula for an FSE on a case-by-case basis.

30.3.1.2 All New FSEs (as defined in Section 3.2 of Part 29), with the exception of non-cooking intensive FSEs as determined by the City, are required to install a Grease Interceptor sized in accordance with the *City of Columbia Grease Trap and Grease Interceptor Tank Sizing Guide (Attachment C)*. A Grease Trap or Grease Interceptor must be sized in accordance with the formulae set forth in (A), (B), or (C) of the *City of Columbia Grease Trap and Grease Interceptor Tank Sizing Guide (Attachment C)* unless the City approves sizing calculations signed and sealed by a registered professional engineer in accordance with the Fixture Unit Calculation Method set forth in (D) of the *City of Columbia Grease Trap and Grease Interceptor Tank Sizing Guide (Attachment C)*. No Grease Interceptor less than 1,000 gallons total capacity will be approved for installation by the City unless acceptable engineering calculations sealed by a professional engineer registered in the state of South Carolina and demonstrating that a smaller size has satisfactory capacity are provided by the FSE Owner to the City and are approved by the City. The City retains sole discretion to approve or deny approval of a

Grease Interceptor less than 1,000 gallons total capacity in all circumstances, even in the event such engineering calculations are provided.

30.3.1.3 All New FSEs must submit, for each Grease Trap and Grease Interceptor, cut sheets, plans, and specifications. These documents must be submitted to the City prior to the FSE's installation of the Grease Trap and/or Grease Interceptor. An approval letter for each new Grease Trap or Grease Interceptor must be issued by the City to the FSE prior to construction and/or installation of the Grease Trap and/or Grease Interceptor by the new FSE.

30.3.1.4 The construction and location criteria for Grease Interceptors must be in accordance with Environmental Protection Agency (EPA) Guidance Document, "On site Wastewater Treatment and Disposal Systems," Chapter 8.

30.3.1.5 No New FSE will be allowed to initiate operations until proper Grease Traps and/or Grease Interceptors, as appropriate, are installed by the FSE in accordance with this Part 30 and Part 29, and are approved by the City.

30.3.1.6 For cases in which underground-type Grease Interceptors are appropriate but not feasible to install in the City's sole discretion, new FSEs must install approved Grease Traps in accordance with this Part 30 and Part 29 for use on individual fixtures, including, without limitation, pot sinks, mop sinks, pre-rinse sinks, wok ovens, floor drains and other potentially grease containing drains. In such cases, Grease Traps will be considered acceptable by the City only if approved flow control fittings are placed on the inlet that prevent overloading and a sample port is placed on the outlet of each Grease Trap.

30.3.1.7 FSE's shall not connect dishwashers, garbage grinders, or domestic sewer to any Grease Trap or Grease Interceptor.

30.3.1.8 All Grease Traps and Grease Interceptors must be installed by a properly licensed plumbing contractor.

30.3.2 <u>EXISTING FSEs</u>

30.3.2.1 All existing FSEs (as defined in Section 3.2 of Part 29) must have Grease Traps and Grease Interceptors approved by the City in accordance with Part 29.

30.3.2.2 In cases where existing FSEs do not already have a Grease Interceptor installed and where the installation of an outdoor Grease Interceptor is feasible in the City's sole discretion, the Grease Interceptor must be installed by the FSE in accordance with this Part 30 and must be approved by the City in writing in advance of installation.

30.3.2.3 Sizing of any Grease Trap or Grease Interceptor must be in accordance with the *City of Columbia Grease Trap and Interceptor Sizing Guide (attached as Attachment C).*

30.3.2.4 Grease Interceptors must be located as close to the source of the wastewater service line at the building as physically possible, while remaining accessible for maintenance.

30.3.2.5 Existing FSEs shall not connect new dishwashers, garbage grinders, or domestic sewer to any Grease Trap or Grease Interceptor. The City, in its sole discretion, may grant a variance to this requirement in circumstances in which the City determines that compliance with this requirement would be unduly burdensome or impractical due to physical condition or layout of the FSE.

30.3.2.6 New flow control devices, Grease Traps, or Grease Interceptors must be pre-approved prior to installation.

30.3.3 GREASE TRAPS

30.3.3.1 Prior to installation, design for all Grease Traps must be submitted by the FSE to the City for approval with supporting calculations, cut sheets, and/or sizing charts, including a sizing chart similar to requirements set forth in the *City of Columbia Grease Trap Specification Sheet Example (attached as Attachment D).* Satisfactory proof of minimum Grease Trap capacity, as specified in the *City of Columbia Grease Trap and Interceptor Sizing Guide (attached as Attachment C)* must also be provided to the City by the FSE for all Grease Traps prior to installation. A Grease Trap must be sized in accordance with the formulae set forth in (A), (B), or (C) of the *City of Columbia Grease Trap and Grease Interceptor Tank Sizing Guide (Attachment C)* unless the City approves sizing calculations signed and sealed by a registered professional engineer in accordance with the Fixture Unit Calculation Method set forth in (D) of the *City of Columbia Grease Trap and Grease Interceptor Tank Sizing Guide (Attachment C).*

30.3.4 GREASE INTERCEPTORS
All FSE's Grease Interceptors must meet each of the following requirements:

30.3.4.1 A Grease Interceptor must be sized in accordance with the formulae set forth in (A), (B), or (C) of the *City of Columbia Grease Trap and Grease Interceptor Tank Sizing Guide (Attachment C)* unless the City approves sizing calculations signed and sealed by a registered professional engineer in accordance with the Fixture Unit Calculation Method set forth in (D) of the *City of Columbia Grease Trap and Grease Interceptor Tank Sizing Guide (Attachment C).*

30.3.4.2 Provide precast or cast in place minimum 4000 psi concrete vaults; The City, in its sole discretion, may allow the use of other materials upon written request for approval prior to installation.

30.3.4.3 Open top inlet tee must extend to 24" from the bottom of the vault;

30.3.4.4 The vault shall have a baffle wall with a minimum 3" air gap for venting at the top and an open top tee extending to 12" from the bottom of the vault;

30.3.4.5 Open top outlet tee must extend to 12" from the bottom of the vault;

30.3.4.6 Access Manholes shall be provided by the FSE directly above all three tees for inspection and maintenance;

30.3.4.7 Two-way cleanouts must be provided by the FSEs on the inlet and outlet lines;

30.3.4.8 Anti-flotation design with proper base course and compacted sub-grade should be considered to prevent settling where conditions warrant;

30.3.4.9 The FSE must design vault top and manhole covers for HS-20 rated loading where applicable; and

30.3.4.10 All Grease Interceptors shall be located where they are easily accessible for inspection, cleaning, and maintenance.

30.3.5 STANDARD GREASE INTERCEPTOR DETAILS

30.3.5.1 FSEs must comply with standard details GR #1 (Attachment A) and GR #2 (Attachment B) for standard Grease Interceptor installation.

30.3.5.2 Grease Interceptors may be installed in series if volume required is more than 1500 gallons. When installed in series, the first tank shall not have a baffle or center tee (see standard detail GR #2, Attachment B).

30.3.6 ACCESS MANHOLES

30.3.6.1 The minimum access opening dimensions shall be a minimum of 24" in diameter.

30.3.6.2 An access opening shall be provided by the FSE above the inlet, baffle wall, and outlet tees and shall be easily removable by one person.

30.3.6.3 A minimum 6” diameter traffic rated clean out with a concrete collar extending down through the vault top may be provided by the FSE above the baffle wall tee in lieu of an access manhole.

30.3.6.4 Manhole Frame and Cover requirements:

30.3.6.4.1 Provide grey iron castings, ASTM A48, Class 30 Iron;

30.3.6.4.2 Machine all bearing surfaces;

30.3.6.4.3 Acceptable manufacturer: US Foundry Model 680; and

30.3.6.4.4 Provide HS-20 rated frame and cover where applicable.

30.4 INSPECTION FOR ACCEPTANCE

30.4.1 The FSE must notify the City 48 hours in advance, during the normal work week, when the Grease Interceptor is ready for final inspection by the City and the City must give final approval prior to the FSE covering any Grease Interceptor.

30.4.2 Where the City denies approval of the Grease Trap and/or Grease Interceptor is denied for a new FSE, the City may elect to submit a request to the appropriate building official requesting that certificates of occupancy be withheld until the Grease Trap and/or Grease Interceptor is constructed in accordance with this specification and is approved by the City.

30.5 ATTACHMENT A: STANDARD GREASE INTERCEPTOR

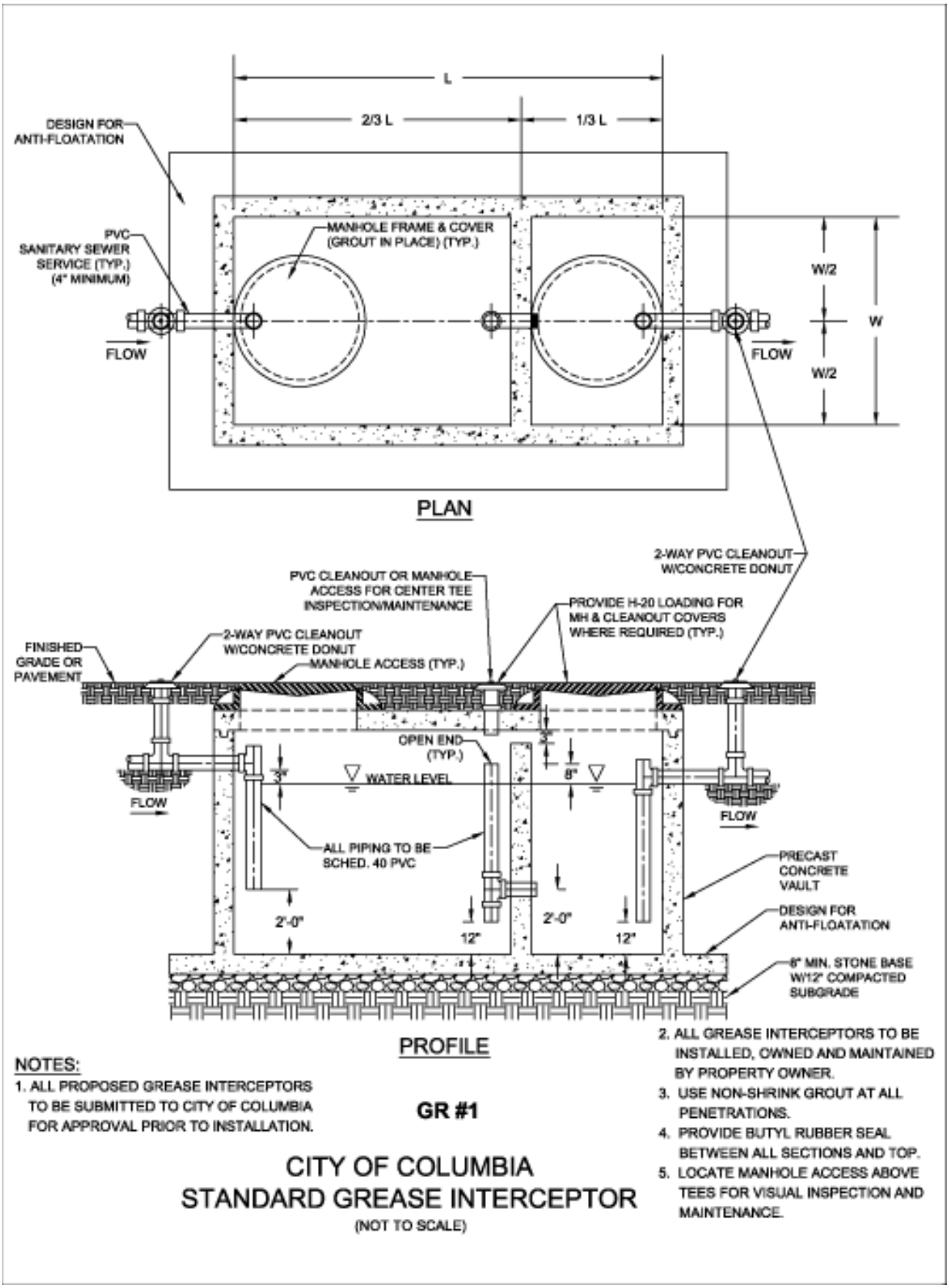

30.6 ATTACHMENT B: STANDARD GREASE INTERCEPTOR IN SERIES

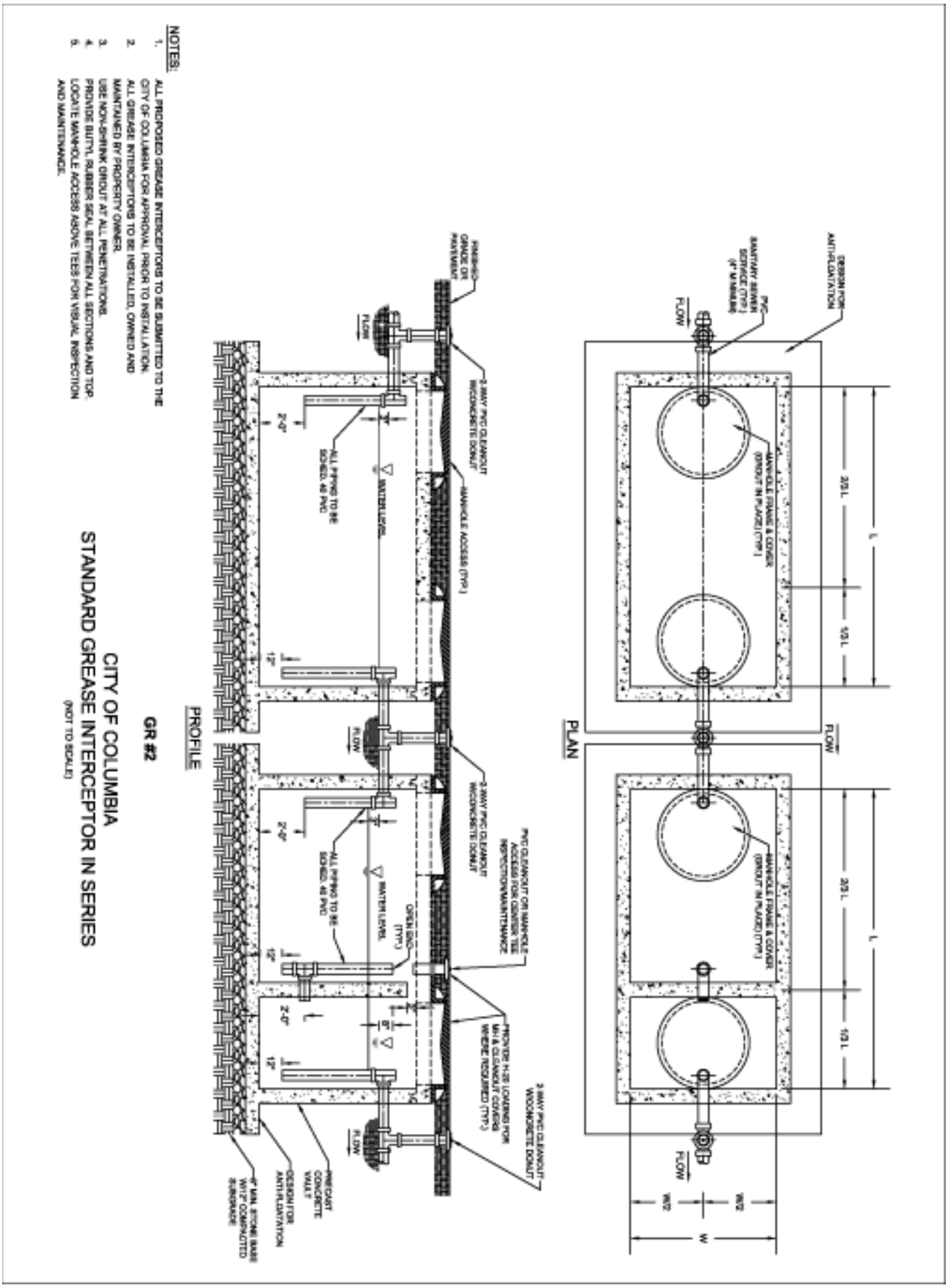

NOTES:

1. ALL PROPOSED GREASE INTERCEPTORS TO BE SUBMITTED TO THE CITY OF COLUMBIA FOR APPROVAL PRIOR TO INSTALLATION.
2. ALL GREASE INTERCEPTORS TO BE INSTALLED, OWNED AND MAINTAINED BY PROPERTY OWNER.
3. USE NON-SHRINK GROUT AT ALL PENETRATIONS.
4. PROVIDE BUTYL RUBBER SEAL BETWEEN ALL SECTIONS AND TOP.
5. LOCATE MANHOLE ACCESS ABOVE TEES FOR VISUAL INSPECTION AND MAINTENANCE.

CITY OF COLUMBIA

STANDARD GREASE INTERCEPTOR IN SERIES

(NOT TO SCALE)

GR #2

30.7 ATTACHMENT C : GREASE TRAP AND GREASE INTERCEPTOR SIZING GUIDE

Attachment C

CITY OF COLUMBIA
GREASE TRAP AND GREASE INTERCEPTOR SIZING GUIDE

A. **NON-COOKING INTENSIVE FOOD SERVICE ESTABLISHMENTS** (examples include ice cream shops, candy shops, deli in grocery or convenience store without cooking facilities, bagel shops, etc.)

Formula: Min. Trap Capacity =[(# of compartments x Length x Width x Depth)/1728] x 7.48 x 0.80

Example: 3 compartment sink *= [(3 compartments x 17" (L) x 17" (W) x 11" deep)/1728] x 7.48 x 0.80*
= 33.02 gallon trap capacity (4.4 cu. ft.).

B. **COOKING INTENSIVE FOOD SERVICE ESTABLISHMENTS** (examples include restaurants, drive-in restaurants, deli's with cooking capacity, carry out restaurants, catering, delivery, etc.)

Formula: Min. Interceptor Volume = No. of Seats x FR x (Hours of Operation/18)

FR= Flow Rate
Full Service Restaurant = 25 gallons
Non-Washable, Paper, or Plastic Utensils = 12.5 gallons

C. **OTHER FOOD SERVICE ESTABLISHMENTS** (examples include hotels, nursing homes, schools, office, or factory cafeteria, etc.)

Formula: Total Volume = # of person meals x 5 gal. x DW
# of person meals = number of meals served during either breakfast, lunch, or supper, whichever is greatest

DW=Dishwashing: With Dishwasher = 1.0 or Without Dishwasher = .75

Examples: *1. A cafeteria with a dishwasher serves 300 meals a day = 300 meals x 5 gal. x 1.0 =1,500 gal.*
2. 200 unit motel w/efficiency kitchens = 200 rooms x 4 people/room x 5 gal./meal x 0.75 = 3,000 gal.

D. **FIXTURE UNIT CALCULATION METHOD** (When using the fixture unit calculation method, the Owner must submit calculations signed and sealed by a registered professional engineer in the state of South Carolina to the City for review.)

Formula: Total Volume = Q x T x SF

Q = Flow in GPM – Flow derived from total Drainage Fixture Units (DFU) or Fixture Units (FU) connected to the interceptor as determined using the International Plumbing Code (2000 or higher edition) or AWWA Manual of Water Supply Practices M22.

T = Retention Time – 30 Minutes

SF = Storage Factor = 1.25 based on fully loaded interceptor with 25% grease/solids.

NOTES:

1. Non-Cooking Intensive Food Service Establishments as determined by the City may utilize grease traps (must have provisions for sampling at outlet of trap). All others must utilize grease interceptors unless approved by City staff. Refer to *Specifications for Grease Traps and Interceptors – Part 30* of the City of Columbia Standard Specifications for requirements.
2. Regardless of minimum size required, underground grease interceptors are required to have a minimum 1,000 gallon capacity. When greater than 1,500 gallon capacity is required, multiple units may be furnished and installed in series, see standard details in "Specifications for Grease Traps and Interceptors – Part 30 of the City of Columbia Standard Specifications. Larger sized interceptors may be approved on a case by case basis.
3. Refer to *Fats, Oils, and Grease Management Regulation – Part 29* for additional information.
4. The foregoing is a recommended minimum guideline only. It does not in any way relieve the owner of ordinance mandated requirements that discharged waste have a maximum grease content of 100 mg/l, see Sewer Use Ordinance Sec. 23-102.
5. Contact Scott Rogers at 545-3290 for more information.

Revised 07/02/13

CITY OF COLUMBIA
GREASE TRAP
SPECIFICATION SHEET EXAMPLE

****NON-COOKING INTENSIVE FOOD ESTABLISHMENTS ONLY****

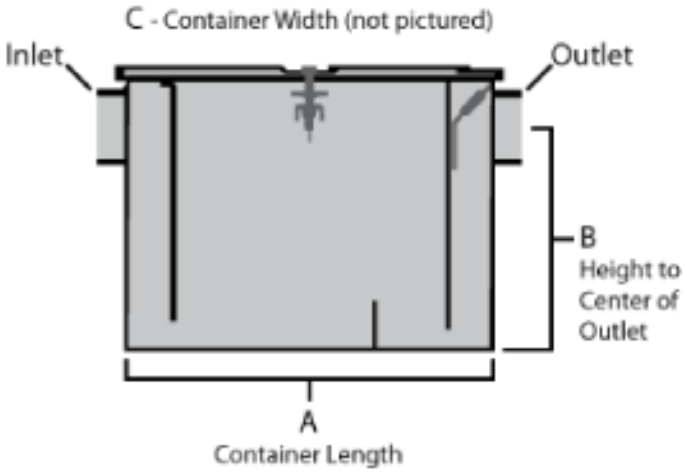

(NOT TO SCALE)

Total Gallon Capacity	Dimension In Inches		
	Length (A)	Height (B)	Width (C)
9.2	19"	8"	14"
19.4	24"	11"	17"
49.8	30"	16"	24"
74.2	34"	18"	28"
98.7	38"	20"	30"

Formula for Calculating Total Grease Trap Capacity:
[Length(A) x Height(B) x Width(C) /1728] x 7.48 = Total Gallon Capacity

NOTES:

1. ALL PROPOSED GREASE TRAP PLANS TO BE SUBMITTED & APPROVED BY CITY OF COLUMBIA DEPARTMENT OF UTILITIES AND ENGINEERING PRIOR TO INSTALLATION.
2. GREASE TRAP INSTALLED, OWNED AND MAINTAINED BY PROPERTY OWNER.

PART 31: SPECIFICATIONS FOR COMMERCIAL SWIMMING POOL BACKWASH & DRAINAGE

TABLE OF CONTENTS

Paragraph	Description	Page No.
31.1	General	31-1
31.2	Definitions	31-1
31.3	Design and Construction Requirements	31-1
31.4	Plan Review for Acceptance	31-2
31.5	Attachment A: Commercial Swimming Pool Discharge Application Form	31-3

CITY OF COLUMBIA REGULATIONS
PART 31
SPECIFICATIONS FOR COMMERCIAL SWIMMING POOL BACKWASH & DRAINAGE

31.1 GENERAL

31.1.1 This section includes guidelines and requirements for Commercial Swimming Pool Backwash and Drainage. Commercial Swimming Pool Discharge Application Form attached hereto as Attachment A is part of these specifications.

31.1.2 All new Commercial Swimming Pool filter backwash and drainage discharge connections must meet these specifications and must receive approval from the City of Columbia (the City) prior to installation.

31.2 DEFINITIONS

31.2.1 *Backwash* means the act of cleaning filter media by means of reverse flow through the filter media or water containing any amount of matter removed from the filter media by the act of cleaning the filter media.

31.2.2 *Commercial Swimming Pool* means an artificial structure either above or below the ground surface to provide for such recreational uses as bathing, swimming, diving, wading, spraying, sliding, floating, rafting, or other similar usage which is not built in connection with a single family residence, or duplex (two living units within a single structure) and the use of which is not confined to the family of the residence and their private guests.

31.2.3 *Filter* means any apparatus containing filter media which is intended to physically remove suspended particles from pool water.

31.2.4 *Filter Backwash Piping* means the piping which extends from the backwash outlet of the filter to its terminus at the point of disposal.

31.2.5 *Main Body of the Pool* means the major portion of the pool body excluding any recesses, niches, coves, etc.

31.2.6 *Main Drain* means the outlet(s) at the bottom of the pool. These outlets are suction/gravity outlets connected to the recirculation piping.

31.2.7 *Main Drain Piping* means the piping connecting the main drain to either the pump suction, surge tank, or the vacuum filter.

31.2.8 *Surge Tank* means an approved fixture or device of such material, shape, and capacity as to adequately receive the surge water from indirect or direct overflows, so constructed to be easily cleaned.

31.3 DESIGN AND CONSTRUCTION REQUIREMENTS

31.3.1 Discharge of pool filter backwash

31.3.1.1 Pool filter backwash must discharge through dedicated filter backwash piping, and must be valved. The filter backwash piping discharge connection must be

completely separated from the pool main drain. Pool filter backwash piping must be connected only to the sanitary sewer system, unless prior approval to discharge elsewhere is granted by the City Engineer. Pool filter backwash discharges must meet the following requirements:

31.3.1.1.1 An interceptor tank must be installed between the filter and the point at which the discharge enters the sanitary sewer system. The tank must include baffle structures for oil, grease, and solids/sand/soil separation. A standard grease interceptor can be utilized (minimum 1,000 gallons), see City of Columbia Engineering Regulations Part 30: Specifications for Grease Traps and Grease Interceptors, Attachment A.

31.3.1.1.2 A pH between 6 and 9 standard units must be maintained for all discharges, and demonstrated with monthly monitoring.

31.3.1.1.3 A discharge log (showing, at a minimum, the date, rate and duration of the discharge) must be kept onsite. All discharges through this discharge connection must be logged.

31.3.1.1.4 A Total Dissolved Solids baseline sampling must be conducted to determine long term monitoring requirements and/or to determine effects on wastewater treatment plant loading.

31.3.1.1.5 City of Columbia personnel must be granted access to the filter backwash system for inspection.

31.3.1.1.6 All logs related to this discharge connection must be submitted to the City of Columbia Wastewater Division each January for the previous year.

31.3.1.1.7 Capacity Assurance Plan approval documentation is required prior to acceptance.

31.3.2 <u>DISCHARGE OF NON-BACKWASH FROM THE POOL MAIN DRAIN</u>

31.3.2.1 Pool main drain piping must be provided, must be completely separated from the filter backwash piping, and must be valved. The main drain piping must discharge to a vegetated land area when possible. Otherwise, the main drain piping must be routed to the storm drainage system in a location approved by the City Engineer. The main drain piping must only convey non-backwash (e.g. water from the main body of the pool, water from the surge tank). Non-backwash may not discharge to the sanitary sewer system under any circumstances. The following requirements apply to the main drain piping discharge:

31.3.2.1.1 The discharge must be dechlorinated to achieve a Total Residual Chlorine concentration of no more than 0.5 mg/L.

31.3.2.1.2 The discharge must have a pH between 6 and 9 standard units.

31.4 <u>PLAN REVIEW FOR ACCEPTANCE</u>

31.4.1 A City of Columbia Commercial Swimming Pool Discharge Form must be completed and submitted to City of Columbia Subdivision Plan Review for

approval. Three (3) sets of plans illustrating the pool layout, including, but not limited to, all site plans, and all related discharge connections, must accompany the form.

31.5 ATTACHMENT A: COMMERCIAL SWIMMING POOL DISCHARGE APPLICATION FORM (Next page)

We Are Columbia

P.O. Box 147, Columbia, South Carolina 29217 • Phone: 803-545-3400 • Fax: 803-988-8199

Facility Name: _____

Facility Address: _____

Contact Name: _____

Contact Phone: _____ Contact Email: _____

Filter Type: _____

Does the pool filter backwash discharge to a dedicated line, separate from the main pool drain, and routed to the Sanitary Sewer System?	__ Yes	__ No	__ N/A
Does the pool filter backwash pass through a tank or interceptor, meeting all design criteria, prior to entering the Sanitary Sewer System?	__ Yes	__ No	__ N/A
Is a monitoring system in place (or planned) to ensure the pH of the pool filter backwash remains between 6 and 9 standard units?	__ Yes	__ No	__ N/A
Is a discharge log present (or planned) onsite to log each discharge including, at a minimum, the date, rate and duration of each discharge?	__ Yes	__ No	__ N/A
Has a Total Dissolved Solids baseline sampling been conducted to determine long term requirements?	__ Yes	__ No	__ N/A
Will City of Columbia personnel be granted access to the filter backwash system for inspection?	__ Yes	__ No	__ N/A
Is a program in place (or planned) to submit discharge logs related to the filter backwash discharge annually in January for the previous year?	__ Yes	__ No	__ N/A
Has a Capacity Assurance Plan been approved?	__ Yes	__ No	__ N/A

Is the main pool drain routed to the land or the Storm Drainage System?	__ Yes	__ No	__ N/A
Is a procedure in place (or planned) to ensure discharges through the main drain are dechlorinated to achieve a TRC of no more than 0.5 mg/L?	__ Yes	__ No	__ N/A
Is a procedure in place (or planned) to ensure discharges through the main drain have a pH between 6 and 9 standard units?	__ Yes	__ No	__ N/A

Date of Capacity Assurance Plan Approval: _____

Name of Capacity Assurance Plan Approver: _____

Comments: _____

_____

_____

_____

_____

_____

The pool design must meet the City of Columbia Commercial Swimming Pool Discharge Requirements. All Plans, Specifications, etc. necessary to demonstrate compliance with the applicable requirements must be submitted along with this form.

Certifications and Reviews on the next page.

Responsible Party Certification

Responsible Party Signature: _____

Responsible Party Name (Printed): _____

Date: _____

City of Columbia Wastewater Review

__ Approved __ Disapproved (see Comments below)

Wastewater Reviewer Signature: _____

Wastewater Reviewer Name (Printed): _____

Comments: _____

_____

_____

_____

City of Columbia Stormwater Review

__ Approved __ Disapproved (see Comments below)

Stormwater Reviewer Signature: _____

Stormwater Reviewer Name (Printed):_____

Comments: _____

_____

_____